HX1310, HX2310-E, HX3310, HX3310-F Installation and Service Guide

Machine Type: 8693

Note: Before using this information and the product it supports, read the general information in Appendix D "Getting help and technical assistance" on page 885, Appendix E "Notices" on page 889, the *Safety, Support, and Warranty Information* document, and the *Safety Information* and *Environmental Notices and User Guide* documents on the *Documentation* CD.

Fifth Edition (August 2023)

© Copyright Lenovo 2016, 2023.

LIMITED AND RESTRICTED RIGHTS NOTICE: If data or software is delivered pursuant to a General Services Administration "GSA" contract, use, reproduction, or disclosure is subject to restrictions set forth in Contract No. GS-35F-05925.

Contents

Contents i

Safety v

Safety statements vi

Chapter 1. The Lenovo Converged HX Series server 1

The Lenovo Documentation CD 3
- Hardware and software requirements 3
- Using the Documentation Browser 3

Related documentation 4

Notices and statements in this document 5

Server features and specifications 5
- Rail and supported rack specifications 9

What your server offers 10

Reliability, availability, and serviceability 12

Server controls, LEDs, and power 14
- Front view 14
- Operator information panel 15
- LCD operating panel assembly 15
- Rear view 18
- Server components 20
- Server power features 25

Chapter 2. Configuring 29

Updating the firmware 29

Configuring the server 30
- Using the Setup Utility 31
- Using the Boot Manager 36
- Starting the backup server firmware 36
- The Update*Xpress* System Pack Installer . . . 36
- Using the integrated management module . . 36
- Using the remote presence and blue-screen capture features 37
- Configuring the Ethernet controller 39
- Enabling Features on Demand Ethernet software 40
- Lenovo ToolsCenter Suite CLI program 40
- Using Lenovo XClarity Administrator 40
- Updating the Universal Unique Identifier (UUID) 41
- Updating the DMI/SMBIOS data 43

Configuring the HX Series appliance 45
- Update the appliance name 45
- Legacy boot mode 45
- BIOS optimization settings 46
- Modify boot options 46

Chapter 3. Troubleshooting 47

Start here 47
- Diagnosing a problem 47
- Undocumented problems 49

Service bulletins 50

Checkout procedure 50
- About the checkout procedure 50
- Performing the checkout procedure 51

Diagnostic tools 51
- Light path diagnostics 53
- Event logs 57
- POST 60
- Dynamic System Analysis 60

Automated service request (call home) 62
- Electronic Service Agent 63

Error messages 63

Troubleshooting by symptom 63
- General problems 63
- Hard disk drive problems 64
- Intermittent problems 66
- Keyboard, mouse, or USB-device problems . . 67
- Memory problems 68
- Microprocessor problems 70
- Monitor and video problems 71
- Network connection problems 73
- Power problems 73
- Serial-device problems 78
- Software problems 79
- Universal Serial Bus (USB) port problems . . . 80
- Video problems 80

Solving power problems 81

Solving Ethernet controller problems 82

Solving undetermined problems 83

Problem determination tips 83

Recovering the server firmware (UEFI update failure) 85
- In-band manual recovery method 85
- In-band automated boot recovery method . . 87
- Out-of-band method 87

Automated boot recovery (ABR) 87

Nx-boot failure 87

Chapter 4. Parts listing, Lenovo Converged HX Series Type 8693. . . . 89

Replaceable server components 89
- Structural parts 97

© Copyright Lenovo 2016, 2023

Power cords 98

Chapter 5. Removing and replacing components 101

High-level procedures for replacing components 101
- Replacing a front HDD/SSD 101
- Replacing a power supply unit (PSU) 102
- Replacing a chassis fan 103
- Replacing a network interface card (NIC) . . . 103
- Replacing a host bus adapter (HBA) 104
- Replacing a memory DIMM 106
- Replacing a microprocessor 107
- Replacing the system board 107
- Replacing the SATADOM boot drive 108

Installation guidelines 108
- System reliability guidelines 109
- Working inside the server with the power on 110
- Handling static-sensitive devices 110

Updating the server configuration 111

Sending DSA data to Lenovo 111

Returning a device or component 111

Removing and replacing server components . . . 111

Removing and replacing consumable and structural parts 112
- Removing the cover 112
- Replacing the cover 113
- Removing the air baffle 114
- Replacing the air baffle 115
- Removing the EIA bracket 116
- Replacing the EIA bracket 117

Removing and replacing Tier 1 CRUs 118
- Removing hot-swap hard disk drives 118
- Replacing hot-swap hard disk drives 119
- Removing a memory module 120
- Memory module installation 121
- Removing a PCI riser-card assembly 128
- Replacing a PCI riser-card assembly 129
- Removing the dedicated slotless HBA controller 131
- Replacing the dedicated slotless HBA controller 131
- Removing an adapter 132
- Replacing an adapter 133
- Removing a thermal kit (hot-swap fan) 135
- Replacing a thermal kit (hot-swap fan) 136
- Removing a hot-swap ac power supply 138
- Replacing a hot-swap ac power supply 139
- Removing a hot-swap hard disk drive backplane 141
- Replacing a hot-swap hard disk drive backplane 142
- Removing the coin-cell battery 144
- Replacing the coin-cell battery 147
- Removing the media cage 149
- Replacing the media cage 150
- Removing the front USB connector assembly 150
- Replacing the front USB connector assembly 151
- Removing the front video connector assembly 152
- Replacing the front video connector assembly 153
- Removing the operator information panel assembly 154
- Replacing the operator information panel assembly 154
- Removing the LCD system information display panel 155
- Replacing the LCD system information display panel 156
- Removing the COM port bracket 158
- Replacing the COM port bracket 160

Removing and replacing Tier 2 CRUs 162
- For service technician only: removing a microprocessor and heat sink 162
- For service technician only: replacing a microprocessor and heat sink 166
- For service technician only: removing the system board 174
- For service technician only: replacing the system board 176
- For service technician only: removing the SATADOM 179
- For service technician only: replacing the SATADOM 180

Appendix A. Integrated management module 2.1 (IMM2.1) error messages 183

IMM Events that automatically notify Support . . . 184

List of IMM events 191

Appendix B. UEFI/POST diagnostic codes. 753

List of UEFI events. 754

Appendix C. DSA diagnostic test results 775

DSA Broadcom network test results 775
- Test results for the DSA Broadcom network test 775

DSA checkpoint panel test results 784

Test results for the DSA checkpoint panel test 784
DSA CPU stress test results 785
Test results for the DSA CPU stress test . . . 785
DSA EXA port ping test results 788
Test results for the DSA EXA port ping test . . 788
DSA hard drive test results 790
Test results for the DSA hard drive test 790
DSA Intel network test results 792
Test results for the DSA Intel network test . . . 792
DSA LSI hard drive test results 797
Test results for the DSA LSI hard drive test . . 797
DSA memory isolation test results. 799
Test results for the DSA memory isolation test 799
DSA memory stress test results 868
Test results for the DSA memory stress test 868
DSA system management test results 870
Test results for the DSA system management test 871

Appendix D. Getting help and technical assistance 885

Before you call 885
Using the documentation 886
Getting help and information from the World Wide Web 886
How to send DSA data 886
Creating a personalized support Web page 886
Software service and support 887
Hardware service and support 887
Taiwan product service 887

Appendix E. Notices 889

Trademarks 890
Important notes 890
Recycling information 890
Particulate contamination 891
Telecommunication regulatory statement 891
Electronic emission notices 891
Federal Communications Commission (FCC) statement 892
Industry Canada Class A emission compliance statement 892
Avis de conformité à la réglementation d'Industrie Canada. 892
Australia and New Zealand Class A statement 892
European Union EMC Directive conformance statement 892
Germany Class A statement 892
Japanese electromagnetic compatibility statements 893
Korea Communications Commission (KCC) statement 894
Russia Electromagnetic Interference (EMI) Class A statement 894
People’s Republic of China Class A electronic emission statement 895
Taiwan Class A compliance statement 895
Taiwan BSMI RoHS declaration 896

Appendix F. Power cord safety statement 897

Index 899

© Copyright Lenovo 2016, 2023

Safety

Before installing this product, read the Safety Information.

قبل تركيب هذا المنتج، يجب قراءة الملاحظات الآمنية

Antes de instalar este produto, leia as Informações de Segurança.

在安装本产品之前，请仔细阅读 Safety Information
(安全信息)。

安裝本產品之前，請先閱讀「安全資訊」。

Prije instalacije ovog produkta obavezno pročitajte Sigurnosne Upute.

Před instalací tohoto produktu si přečtěte příručku bezpečnostních instrukcí.

Læs sikkerhedsforskrifterne, før du installerer dette produkt.

Lees voordat u dit product installeert eerst de veiligheidsvoorschriften.

Ennen kuin asennat tämän tuotteen, lue turvaohjeet kohdasta Safety Information.

Avant d'installer ce produit, lisez les consignes de sécurité.

Vor der Installation dieses Produkts die Sicherheitshinweise lesen.

Πριν εγκαταστήσετε το προϊόν αυτό, διαβάστε τις πληροφορίες ασφάλειας
(safety information).

לפני שתתקינו מוצר זה, קראו את הוראות הבטיחות.

A termék telepítése előtt olvassa el a Biztonsági előírásokat!

Prima di installare questo prodotto, leggere le Informazioni sulla Sicurezza.

製品の設置の前に、安全情報をお読みください。

본 제품을 설치하기 전에 안전 정보를 읽으십시오.

Пред да се инсталира овој продукт, прочитајте информацијата за безбедност.

ᠣᠨᠳᠤᠷᠠᠳᠤ ᠴᠣᠬᠣᠯᠠᠭᠠᠳᠤ ᠪᠦᠳᠦᠭᠡᠳᠦᠨ ᠤᠨᠳᠠᠭᠠᠯᠠᠬᠤ ᠳᠤᠷᠠᠳᠤ ᠲᠤᠰᠠᠯᠬᠠᠬᠤ ᠳᠤᠷᠠᠳᠤ ᠪᠠᠳᠠᠭᠠᠯ

Перед установкой продукта прочтите инструкции по технике безопасности.

Pred inštaláciou tohto zariadenia si pečítaje Bezpečnostné predpisy.

Pred namestitvijo tega proizvoda preberite Varnostne informacije.

Antes de instalar este producto, lea la información de seguridad.

Läs säkerhetsinformationen innan du installerar den här produkten.

ཐོན་རྫས་འདི་བདེ་སྒྲིང་མ་བྱས་གོང་། ཁྱོད་ཀྱི་ཡིད་གཟབ་
བྱ་འདྲ་མིན་ཡོད་པའི་འོད་སྟེར་བལྟ་དགོས།

Bu ürünü kurmadan önce güvenlik bilgilerini okuyun.

مەزكۇر مەھسۇلاتنى ئورنىتىشتىن بۇرۇن بىخەتەرلىك ئۇچۇرلىرىنى ئوقۇپ چىقىڭ.

Youq mwngz yungh canjbinj neix gaxgonq, itdingh aeu doeg aen canjbinj soengq cungj vahgangj ancien siusik.

Safety statements

These statements provide the caution and danger information that is used in this documentation.

Important: Each caution and danger statement in this documentation is labeled with a number. This number is used to cross reference an English-language caution or danger statement with translated versions of the caution or danger statement in the *Safety Information* document.

For example, if a caution statement is labeled `Statement 1`, translations for that caution statement are in the *Safety Information* document under `Statement 1`.

Be sure to read all caution and danger statements in this documentation before you perform the procedures. Read any additional safety information that comes with your system or optional device before you install the device.

Statement 1

DANGER

Electrical current from power, telephone, and communication cables is hazardous.

To avoid a shock hazard:

- **Do not connect or disconnect any cables or perform installation, maintenance, or reconfiguration of this product during an electrical storm.**
- **Connect all power cords to a properly wired and grounded electrical outlet.**
- **Connect to properly wired outlets any equipment that will be attached to this product.**
- **When possible, use one hand only to connect or disconnect signal cables.**
- **Never turn on any equipment when there is evidence of fire, water, or structural damage.**
- **Disconnect the attached power cords, telecommunications systems, networks, and modems before you open the device covers, unless instructed otherwise in the installation and configuration procedures.**
- **Connect and disconnect cables as described in the following table when installing, moving, or opening covers on this product or attached devices.**

To Connect:	To Disconnect:
1. Turn everything OFF.	1. Turn everything OFF.
2. First, attach all cables to devices.	2. First, remove power cords from outlet.
3. Attach signal cables to connectors.	3. Remove signal cables from connectors.
4. Attach power cords to outlet.	4. Remove all cables from devices.
5. Turn device ON.	

Statement 2

CAUTION:
When replacing the lithium battery, use only Part Number 33F8354 or an equivalent type battery recommended by the manufacturer. If your system has a module containing a lithium battery, replace it only with the same module type made by the same manufacturer. The battery contains lithium and can explode if not properly used, handled, or disposed of. *Do not:*

- **Throw or immerse into water**
- **Heat to more than 100°C (212°F)**
- **Repair or disassemble**

Dispose of the battery as required by local ordinances or regulations.

Statement 3

CAUTION:

© Copyright Lenovo 2016, 2023

When laser products (such as CD-ROMs, DVD drives, fiber optic devices, or transmitters) are installed, note the following:

- **Do not remove the covers. Removing the covers of the laser product could result in exposure to hazardous laser radiation. There are no serviceable parts inside the device.**
- **Use of controls or adjustments or performance of procedures other than those specified herein might result in hazardous radiation exposure.**

DANGER

Some laser products contain an embedded Class 3A or Class 3B laser diode. Note the following. Laser radiation when open. Do not stare into the beam, do not view directly with optical instruments, and avoid direct exposure to the beam.

Class 1 Laser Product
Laser Klasse 1
Laser Klass 1
Luokan 1 Laserlaite
Appareil À Laser de Classe 1

Statement 4

CAUTION: Use safe practices when lifting.

≥ 18 kg (39.7 lb)

≥ 32 kg (70.5 lb)

≥ 55 kg (121.2 lb)

Statement 5

CAUTION:

The power control button on the device and the power switch on the power supply do not turn off the electrical current supplied to the device. The device also might have more than one power cord. To remove all electrical current from the device, ensure that all power cords are disconnected from the power source.

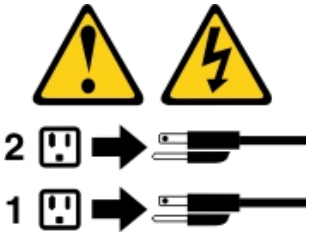

Statement 6

CAUTION:
If you install a strain-relief bracket option over the end of the power cord that is connected to the device, you must connect the other end of the power cord to an easily accessible power source.

Statement 8

CAUTION:
Never remove the cover on a power supply or any part that has the following label attached.

Hazardous voltage, current, and energy levels are present inside any component that has this label attached. There are no serviceable parts inside these components. If you suspect a problem with one of these parts, contact a service technician.

Statement 12

CAUTION:
The following label indicates a hot surface nearby.

© Copyright Lenovo 2016, 2023

Statement 13

DANGER

Overloading a branch circuit is potentially a fire hazard and a shock hazard under certain conditions. To avoid these hazards, ensure that your system electrical requirements do not exceed branch circuit protection requirements. Refer to the information that is provided with your device for electrical specifications.

Statement 15

CAUTION:
Make sure that the rack is secured properly to avoid tipping when the server unit is extended.

Statement 17

CAUTION:
The following label indicates moving parts nearby.

Statement 26

CAUTION:
Do not place any object on top of rack-mounted devices.

Statement 27

CAUTION:
Hazardous moving parts are nearby.

Rack Safety Information, Statement 2

DANGER

- **Always lower the leveling pads on the rack cabinet.**
- **Always install stabilizer brackets on the rack cabinet.**
- **Always install servers and optional devices starting from the bottom of the rack cabinet.**
- **Always install the heaviest devices in the bottom of the rack cabinet.**

© Copyright Lenovo 2016, 2023

Chapter 1. The Lenovo Converged HX Series server

This publication contains information and instructions for setting up your Lenovo Converged HX Series Type 8693 server, instructions for cabling and configuring the server, removing and replacing devices, and diagnostics and troubleshooting information.

The Lenovo Converged HX Series Type 8693 server is a 1-U-high[1] rack model server that is used for 4 HX Series models.

The HX1310, model type AC1, contains a single processor and is most suited for remote office branch office (ROBO) deployments.

The HX3310, model type AC2, is most suited for compute-heavy virtualized workloads such as virtual desktop infrastructure (VDI). The all flash version named the HX3310-F, model type AC3 provides even greater IO performance for the most demanding of virtualized workloads.

All three of these models shown below contain eight 2.5-inch drives with either two SSDs and six HDDs or eight SSDs for the HX3310-F.

Figure 1. HX1310, model type AC1; HX3310, model type AC2; HX3310-F, model type AC3

The HX2310-E, model type ACA, contains special licensing and is best suited to small to medium business (SMB) environments where a single cluster of up to 4 nodes is sufficient.

The HX2310-E models as shown below contain seven 2.5-inch drives with one SSD and six HDDs.

Figure 2. HX2310-E, model type ACA

For more information about the Lenovo Converged HX Series appliances, see the following Lenovo product guides:

- Lenovo Converged HX1000 series: https://lenovopress.com/lp0503
- Lenovo Converged HX2000 series: https://lenovopress.com/lp0504
- Lenovo Converged HX3000 series: https://lenovopress.com/lp0505

The server comes with a limited warranty. For information about the terms of the warranty, see the *Safety, Support, and Warranty Information* document that comes with the server.

1. Racks are marked in vertical increments of 4.45 centimeters (1.75 inches) each. Each increment is referred to as a unit, or a “U”. A 1-U-high device is approximately 4.45 centimeters (1.75 inches) tall.

© Copyright Lenovo 2016, 2023

The server contains Lenovo X-Architecture technology, which helps increase performance and reliability. For more information, see “What your server offers” on page 10 and “Reliability, availability, and serviceability” on page 12.

You can obtain up-to-date information about the server and other Lenovo server products at http://shop.lenovo.com/us/ en/systems/. At http://www.ibm.com/support/mysupport/, you can create a personalized support page by identifying Lenovo products that are of interest to you. From this personalized page, you can subscribe to weekly email notifications about new technical documents, search for information and downloads, and access various administrative services.

If you participate in the Lenovo client reference program, you can share information about your use of technology, best practices, and innovative solutions; build a professional network; and gain visibility for your business. For more information about the Lenovo client reference program, see http://www.ibm.com/ibm/clientreference/.

If firmware and documentation updates are available, you can download them from the Lenovo Web site. The server might have features that are not described in the documentation that comes with the server, and the documentation might be updated occasionally to include information about those features, or technical updates might be available to provide additional information that is not included in the server documentation. To check for updates, go to http://www.lenovo.com/support.

Record information about the server in the following table.

Product name	Lenovo Converged HX Series server
Machine type	Type 8693
Model number	_____
Serial number	_____

The model number and serial number are on the ID label on the front of the server, as shown in the following illustration.

Note: The illustrations in this document might differ slightly from your server.

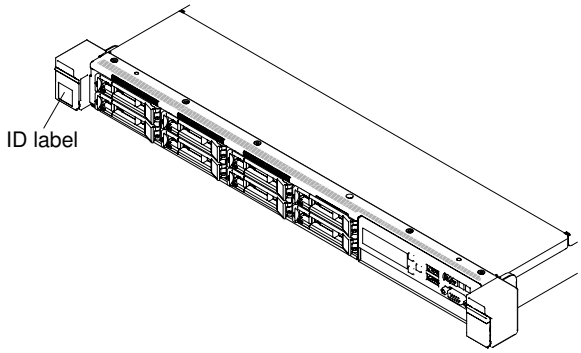

Figure 3. ID label

The MAC address label is on the top side of the user information tag.

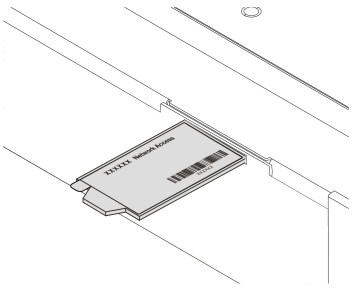

Figure 4. MAC address label

In addition, the system service label, which is on the cover of the server, provides a QR code for mobile access to service information. You can scan the QR code using a QR code reader and scanner with a mobile device and get quick access to the Lenovo Service Information Web site. The Lenovo Service Information Web site provides additional information for parts installation and replacement videos, and error codes for server support.

The Lenovo Documentation CD

The Lenovo *Documentation* CD contains documentation for the server in Portable Document Format (PDF) and includes the Documentation Browser to help you find information quickly.

Hardware and software requirements

The Lenovo *Documentation* CD requires the following minimum hardware and software:

- Microsoft® Windows® XP, Microsoft Windows 2000, or Red Hat Linux
- 100 MHz microprocessor
- 32 MB of RAM
- Adobe Acrobat Reader 3.0 (or later) or xpdf, which comes with Linux operating systems

Using the Documentation Browser

Use the Documentation Browser to browse the contents of the CD, read brief descriptions of the documents, and view documents, using Adobe Acrobat Reader or xpdf.

The Documentation Browser automatically detects the regional settings in use in your server and displays the documents in the language for that region (if available). If a document is not available in the language for that region, the English-language version is displayed.

Use one of the following procedures to start the Documentation Browser:

- If Autostart is enabled, insert the CD into the CD or DVD drive. The Documentation Browser starts automatically.
- If Autostart is disabled or is not enabled for all users, use one of the following procedures:
  - If you are using a Windows operating system, insert the CD into the CD or DVD drive and click **Start** → **Run**. In the **Open** field, type
    `e:\win32.bat`
    where *e* is the drive letter of the CD or DVD drive, and click **OK**.
  - If you are using Red Hat Linux, insert the CD into the CD or DVD drive; then, run the following command from the /mnt/cdrom directory:
    `sh runlinux.sh`

Select the server from the **Product** menu. The **Available Topics** list displays all the documents for the server. Some documents might be in folders. A plus sign (+) indicates each folder or document that has additional documents under it. Click the plus sign to display the additional documents.

When you select a document, a description of the document is displayed under **Topic Description**. To select more than one document, press and hold the `Ctrl` key while you select the documents. Click **View** to view the selected document or documents in Acrobat Reader or xpdf. If you selected more than one document, all the selected documents are opened in Acrobat Reader or xpdf.

To search all the documents, type a word or word string in the **Search** field and click **Search**. The documents in which the word or word string appears are listed in order of the most occurrences. Click a document to view it, and press `Ctrl+F` to use the Acrobat search function, or press `Alt+F` to use the xpdf search function within the document.

Click **Help** for detailed information about using the Documentation Browser.

Related documentation

This *Installation and Service Guide* contains general information about the server including how to set up and cable the server, how to install supported optional devices, how to configure the server, and information to help you solve problems yourself and information for service technicians. The following documentation also comes with the server:

- *Environmental Notices and User Guide*

  This document is in PDF format on the Lenovo *Documentation* CD. It contains translated environmental notices.

- *Lenovo License Agreement for Machine Code*

  This document is in PDF format on the Lenovo *Documentation* CD. It provides translated versions of the *Lenovo License Agreement for Machine Code* for your product.

- *Important Notices*

  This document is in printed format and comes with the server. It contains information about the safety, environmental, and electronic emission notices for your Lenovo product.

- *Licenses and Attributions Documents*

  This document is in PDF format on the Lenovo *Documentation* CD. It provides the open source notices.

- *Rack Installation Instructions*

  This printed document contains instructions for installing the server in a rack and comes with the rack kit.

- *Rack Safety Information*

  This multilingual document provides translated versions of the caution and danger statements that appear in the rack documentation. Each caution and danger statement has an assigned number, which you can use to locate the corresponding statement in your native language.

- *Safety Information*

  This document is in PDF format on the Lenovo *Documentation* CD. It contains translated caution and danger statements. Each caution and danger statement that appears in the documentation has a number that you can use to locate the corresponding statement in your language in the *Safety Information* document.

- *Safety Information Labels*

  This document provides the Simplified Chinese, Mongolian, Tibetan, Uygur, and Zhuang translated versions of the product safety labels.

- *Safety, Support, and Warranty Information*

  This document is in printed format and comes with the server. It contains safety information, support statement, and the Lenovo Statement of Limited Warranty.
- *Read Me First*

  This document is in printed format and comes with the server. This document also provides information about how to find the support information and most up-to-date documents on the Web site.
- *NUTANIX END USER LICENSE AGREEMENT*

  This document is in printed format and comes with the server. It contains license agreement information for end users.

Depending on the server model, additional documentation might be included on the Lenovo *Documentation* CD.

The ToolsCenter for System x and BladeCenter is an online information center that contains information about tools for updating, managing, and deploying firmware, device drivers, and operating systems. The ToolsCenter for System x and BladeCenter is at http://publib.boulder.ibm.com/infocenter/toolsctr/v1r0/.

The server might have features that are not described in the documentation that you received with the server. The documentation might be updated occasionally to include information about those features, or technical updates might be available to provide additional information that is not included in the server documentation. These updates are available from the Lenovo Web site. To check for updates, go to http://www.lenovo.com/support.

Notices and statements in this document

The caution and danger statements in this document are also in the multilingual *Safety Information* document, which is on the Lenovo documentation CD. Each statement is numbered for reference to the corresponding statement in your language in the *Safety Information* document.

The following notices and statements are used in this document:

- **Note:** These notices provide important tips, guidance, or advice.
- **Important:** These notices provide information or advice that might help you avoid inconvenient or problem situations.
- **Attention:** These notices indicate potential damage to programs, devices, or data. An attention notice is placed just before the instruction or situation in which damage might occur.
- **Caution:** These statements indicate situations that can be potentially hazardous to you. A caution statement is placed just before the description of a potentially hazardous procedure step or situation.
- **Danger:** These statements indicate situations that can be potentially lethal or extremely hazardous to you. A danger statement is placed just before the description of a potentially lethal or extremely hazardous procedure step or situation.

Server features and specifications

The following information is a summary of the features and specifications of the server. Depending on the model, some features might not be available, or some specifications might not apply.

Microprocessor (depending on the model):

- Supports up to two Intel® Xeon® multi-core microprocessors (one installed)
- Level-3 cache

- Two QuickPath Interconnect (QPI) links speed up to 9.6 GT per second

Notes:

- Use the Setup Utility program to determine the type and speed of the microprocessors.
- For a list of supported microprocessors, see http://www.lenovo.com/ serverproven/.

Memory (depending on the model):

- Minimum: 64 GB
- Maximum: 1536 GB
- Type:
  - PC4-19200 (DDR4-2400)
  - Dual-rank or quad-rank
  - RDIMM or LRDIMM
- Slots: 24 dual inline
- Supports (depending on the model):
  - 16 GB and 32 GB RDIMMs
  - 64 GB LRDIMMs

Integrated functions:

- Integrated management module 2.1 (IMM2.1), which consolidates multiple management functions in a single chip.
- Broadcom BCM5719 Quad Port Gigabit Ethernet controller with Wake on LAN support
- Five Universal Serial Bus (USB) ports
  - Two USB ports in the front
  - Two USB ports in the rear
  - One internal USB port
- Four network ports (four 1 Gb Ethernet ports on the system)
- One System Management RJ-45 connector on the rear to connect to a system management network

  This system management connector is dedicated to the integrated management module 2.1 (IMM2.1) functions.
- Optional serial port

Hard disk drive expansion bays (depending on the model):

Seven or eight 2.5-inch hot-swap hard disk drive bays

Video controller (integrated into IMM2.1):

- Matrox G200eR2

  Note: The maximum video resolution is 1600 x 1200 at 75 Hz.
  - SVGA compatible video controller
  - DDR3 528 MHz SDRAM video memory controller
  - Avocent Digital Video Compression
  - 16 MB of video memory (not expandable)

Size (1U):

- Height: 43 mm (1.7 in.)
- Depth: 735.4 mm (28.95 in.)
- Width: 434.4 mm (17.1 in.)
- Weight: Approximately 19.3 kg (42.55 lb) depending upon configuration

PCI expansion slots:

Supports two PCI riser-card assembly connectors:

- Connector 1 supports low-profile card.
- Connector 2 supports low-profile or half-length, full-height cards.

For a list of the supported PCI riser card assembly configurations, go to "Replacing a PCI riser-card assembly" on page 129 or "Replacing an adapter" on page 133.

Electrical input:

- Sine-wave input (50 - 60 Hz) required
- For 750W/900W Platinum power supply
  - Input voltage low range:
    - Minimum: 100 V ac
    - Maximum: 127 V ac
  - Input voltage high range:
    - Minimum: 200 V ac
    - Maximum: 240 V ac
- Input kilovolt-amperes (kVA), approximately:
  - Minimum: 0.179 kVA
  - Maximum: 1.188 kVA

  Notes:
  - Power consumption and heat output vary depending on the number and type of optional features installed and the power-management optional features in use.
  - The noise emission level stated is the declared (upper limit) sound power level, in bels, for a random sample of machines. All measurements are made in accordance with ISO 7779 and reported in conformance with ISO 9296. Actual sound-pressure levels in a given location might exceed the average values stated because of room reflections and other nearby noise sources. The noise emission level stated in the declared (upper limit) sound-power level, in bels, for a random sample of system.

Hot-swap fans:

- One microprocessor: five dual-motor hot-swap fans 1, 2, 3, 5, 7
- Two microprocessors: seven dual-motor hot-swap fans 1, 2, 3, 5, 6, 7, 8

Note: The fan 4 slot is always occupied by a fan filler.

Power supply:

- Up to two hot-swap power supplies for redundancy support
  - 750-watt ac 80 PLUS Platinum
  - 900-watt ac 80 PLUS Platinum

Note: Power supplies in the server must be with the same power rating or wattage.

Acoustical noise emissions:

- Sound power, idling: 6.5 bels maximum
- Sound power, operating: 6.5 bels maximum

Note: The PCIe options supported in this system vary greatly in function, power draw, and required cooling. Any increase in cooling required by these options will result in increased fan speed and produced sound power level. The actual sound pressure levels measured in your installation depend upon a variety of factors, including the number of racks in the installation; the size, materials, and configuration of the room; the noise levels from other equipment; the room ambient temperature and pressure, and employees' location in relation to the equipment.

Heat output:

Approximate heat output:

- Minimum configuration: 460.62 Btu per hour (ac 135 watts)
- Maximum configuration: 3490 Btu per hour (ac 1023 watts)

Environment:

Server on:

- Temperature:
  - 5°C to 40°C (41°F to 104°F)
  - Altitude: 0 m to 950 m (3,117 ft); decrease the maximum system temperature by 1°C for every 175-m increase in altitude.
- Humidity:
  - Non-condensing: -12°C dew point (10.4°F)
  - Relative humidity: 8% to 85%
- Maximum dew point: 24°C (75.2°F)
- Maximum altitude: 3,050 m (10,000 ft), 5°C to 28°C (41°F to 82°F)
- Maximum rate of temperature change:
  - Tape drives: 5°C/hr (41°F/hr)
  - Hard disk drives: 20°C/hr (68°F/hr)

Server off:

- Temperature: 5°C to 45°C (41°F to 113°F)
- Relative humidity: 8% to 85%
- Maximum dew point: 27°C (80.6°F)

Storage (non-operating):

- Temperature: 1°C to 60°C (33.8°F to 140°F)
- Maximum altitude: 3,050 m (10,000 ft)
- Relative humidity: 5% to 80%
- Maximum dew point: 29°C (84.2°F)

Shipment (non-operating):

- Temperature: -40°C to 60°C (-40°F to 140°F)
- Maximum altitude: 10,700 m (35,105 ft)
- Relative humidity: 5% to 100%
- Maximum dew point: 29°C (84.2°F)

Attention:

- Design to ASHRAE Class A3, ambient of 40°C, with relaxed support:
  - Support cloud like workload with no performance degradation acceptable (Turbo-Off).
  - Under no circumstance, can any combination of worst case workload and configuration result in system shutdown or design exposure at 40°C.
- Chassis is powered on.
- A3 - Derate maximum allowable temperature 1°C/175 m above 950 m.
- The minimum humidity level for class A3 is the higher (more moisture) of the -12°C dew point and the 8% relative humidity. These intersect at approximately 25°C. Below this intersection (~25°C) the dew point (-12°C) represents the minimum moisture level, while above it relative humidity (8%) is the minimum.

- Moisture levels lower than 0.5°C DP, but not lower -10 °C DP or 8% relative humidity, can be accepted if appropriate control measures are implemented to limit the generation of static electricity on personnel and equipment in the data center. All personnel and mobile furnishings and equipment must be connected to ground via an appropriate static control system. The following items are considered the minimum requirements:
  - Conductive materials (conductive flooring, conductive footwear on all personnel that go into the datacenter, all mobile furnishings and equipment will be made of conductive or static dissipative materials).
  - During maintenance on any hardware, a properly functioning wrist strap must be used by any personnel who contacts IT equipment.
- 5°C/hr for data centers employing tape drives and 20°C/hr for data centers employing disk drives.
- Chassis is removed from original shipping container and is installed but not in use, for example, during repair, maintenance, or upgrade.
- The equipment acclimation period is 1 hour per 20°C of temperature change from the shipping environment to the operating environment.
- Condensation is acceptable, but not rain.

Rail and supported rack specifications

Option name	System x Gen II Universal Slides Kit
Option part number	00KA500
Rail type	Full-out slide rail (ball bearing)
Supported rack type	Any four-post rack, complying with the International Electrotechnical Commission (IEC) standard If a 0U PDU is to be installed, read the notes at the bottom.
Service on rack	Yes
Cable management arm (CMA) support	Yes
1U PDU support	Yes
0U PDU support	Limited support. Read the notes at the bottom.
Mounting holes	Square, round, or threaded
Thickness of mounting flanges	2 mm (0.08 inches) – 4.65 mm (0.18 inches)
Distance between front and rear mounting flanges	617 mm (24.29 inches) – 812 mm (31.97 inches)
Rail length (measured when mounted on the rack, starting from the front surface of the front mounting flange to the rear most point of the rail)	836.8 mm (32.94 inches)

Notes:

- If you want to install the rail and a 0U PDU into the same rack, the rack must meet the following height and depth requirements:
  - 42U or higher
  - At least 1100-mm (43.31-inch) deep if no CMA is to be installed; at least 1200-mm (47.24-inch) deep if a CMA is to be installed
- The option part number might change.

What your server offers

This section introduces features and technologies the server uses and provides.

- **Dynamic System Analysis (DSA)**

  The server comes with the Dynamic System Analysis (DSA) Preboot diagnostic program stored in the integrated USB memory on the server. DSA collects and analyzes system information to aid in diagnosing server problems, as well as offering a rich set of diagnostic tests of the major components of the server. DSA creates a DSA log, which is a chronologically ordered merge of the system-event log (as the IPMI event log), the Integrated Management Module 2.1 (IMM2.1) chassis event log (as the ASM event log), and the operating-system event logs. You can send the DSA log as a file to Lenovo Support or view the information as a text file or Hypertext Markup Language (HTML) file.

- **Features on Demand**

  If a Features on Demand feature is integrated in the server or in an optional device that is installed in the server, you can purchase an activation key to activate the feature. For information about Features on Demand, see https://fod.lenovo.com/lkms.

- **Lenovo XClarity Administrator**

  Lenovo XClarity Administrator is a centralized resource-management solution that enables administrators to deploy infrastructure faster and with less effort. The solution seamlessly integrates into System x, ThinkServer, and NeXtScale servers, as well as the Flex System converged infrastructure platform.

  Lenovo XClarity Administrator provides the following features:

  - Intuitive graphical user interface
  - Automated discovery and inventory
  - Firmware updates and compliance
  - Configuration patterns
  - Bare metal deployment
  - Security management
  - Upward integration
  - Representational state transfer (REST) application programming interfaces and Windows PowerShell
  - Simple network management protocol (SNMP), system log, and e-mail forwarding

  For more information, see "Using Lenovo XClarity Administrator" on page 40.

- **Lenovo XClarity Energy Manager**

  Lenovo XClarity Energy Manager is a tool for data center power management. It models the data center physical hierarchy and monitors power and temperature at the server level and the group level. By analyzing power and temperature data, Lenovo XClarity Energy Manager helps you improve business continuity and increase power efficiency. For more information, go to http://support.lenovo.com/us/en/downloads/ds101160.

- **Lenovo ToolsCenter Suite CLI**

  The Lenovo ToolsCenter Suite CLI program is a collection of server management tools that utilize a command-line interface program to manage firmware, hardware, and operating systems for CMM, IMM, and Flex-IOM based systems using the applications. Lenovo ToolsCenter Suite CLI is comprised of individual ToolsCenter application modules that are easily updated. For more information, go to https://support.lenovo.com/us/en/documents/LNVO-CENTER.

- **Integrated management module 2.1 (IMM2.1)**

The integrated management module 2.1 (IMM2.1) combines service processor functions, video controller, and remote presence and blue-screen capture features in a single chip. The IMM provides advanced service-processor control, monitoring, and alerting function. If an environmental condition exceeds a threshold or if a system component fails, the IMM lights LEDs to help you diagnose the problem, records the error in the IMM event log, and alerts you to the problem. Optionally, the IMM also provides a virtual presence capability for remote server management capabilities. The IMM provides remote server management through the following industry-standard interfaces:

- Intelligent Platform Management Interface (IPMI) version 2.0
- Simple Network Management Protocol (SNMP) version 3.0; SNMP Trap version 1.0
- Common Information Model (CIM)
- Web browser

Some of the features that are unique to the IMM are enhanced performance, higher-resolution remote video, expanded security options, and Feature on Demand enablement for hardware and firmware options.

For additional information, see "Using the integrated management module" on page 36 and the *Integrated Management Module II User's Guide* at https://pubs.lenovo.com/imm2/product_page.html.

- **Enterprise X-Architecture technology**

  X-Architecture technology combines proven, innovative designs to make your Intel-processor-based server powerful, scalable, and reliable.

- **Integrated network support**

  The server comes with an integrated quad-port Broadcom Gigabit Ethernet controller, which supports connection to a 10 Mbps, 100 Mbps, or 1000 Mbps network. For more information, see "Configuring the Ethernet controller" on page 39.

- **Integrated Trusted Platform Module (TPM)**

  This integrated security chip performs cryptographic functions and stores private and public secure keys. It provides the hardware support for the Trusted Computing Group (TCG) specification. You can download the software to support the TCG specification, when the software is available. You can enable TPM support through the Setup Utility under the **System Security** menu option.

- **Large data-storage capacity and hot-swap capability**

  The server supports one, two, or eight hot-swap Serial ATA (SATA) solid-state drives.

  The server supports six 2.5-inch hot-swap SATA hard disk drives.

  With the hot-swap feature, you can add, remove, or replace solid-state drives and hard disk drives without turning off the server.

- **Large system-memory capacity**

  The server can support up to 768 GB of system memory. The server provides 24 dual inline memory module (DIMM) connectors. The server memory controller supports error correcting code (ECC) for PC4-19200 (DDR4-2400), DDR4 (fourth-generation double-data-rate), synchronous dynamic random access memory (SDRAM) DIMMs.

- **Light path diagnostics**

  Light path diagnostics provides LEDs to help you diagnose problems. For more information about light path diagnostics and the LEDs, see "Operator information panel" on page 15 or "LCD operating panel assembly" on page 15.

- **Mobile access to Lenovo Service Information Web site**

The server provides a QR code on the system service label, which is on the cover of the server, that you can scan using a QR code reader and scanner with a mobile device to get quick access to the Lenovo Service Information Web site. The Lenovo Service Information Web site provides additional information for parts installation and replacement videos, and error codes for server support. For the QR code, see Chapter 1 “The Lenovo Converged HX Series server” on page 1.

- **Multi-core processing**

  The HX series models support two Intel Xeon E5-2600 v4 series multi-core microprocessors except for the HX1310 model which comes with one microprocessor.

- **PCI adapter capabilities**

  The server has two PCI interface slots. See “Replacing an adapter” on page 133 for detailed information.

- **Redundant connection**

  The addition of the optional Ethernet adapter provides failover capability to a redundant Ethernet connection with the applicable application installed. If a problem occurs with the primary Ethernet connection and the optional Ethernet adapter is installed on the server, all Ethernet traffic that is associated with the primary connection is automatically switched to the optional redundant Ethernet adapter connection. If the applicable device drivers are installed, this switching occurs without data loss and without user intervention.

- **Redundant cooling and optional power capabilities**

  The appliances come with two 750-watt or 900-watt hot-swap power supplies and seven dual-motor hot-swap fans, which provide redundancy and hot-swap capability for a typical configuration. The redundant cooling by the fans in the server enables continued operation if one of the fans fails.

  Note: You cannot mix power supplies that have different wattages in the server.

- **Systems-management capabilities**

  The server comes with an Integrated management module 2.1 (IMM2.1). When the IMM is used with the systems-management software that comes with the server, you can manage the functions of the server locally and remotely. The IMM also provides system monitoring, event recording, and network alert capability. The systems-management connector on the rear of the server is dedicated to the IMM. The dedicated systems-management connector provides additional security by physically separating the management network traffic from the production network. You can use the Setup Utility to configure the server to use a dedicated systems-management network or a shared network.

- **UEFI-compliant server firmware**

  Lenovo System x Server Firmware (server firmware) offers several features, including Unified Extensible Firmware Interface (UEFI) 2.1 compliance; enhanced reliability, availability, and serviceability (RAS) capabilities; and basic input/output system (BIOS) compatibility support. UEFI replaces the BIOS and defines a standard interface between the operating system, platform firmware, and external devices. UEFI-compliant System x servers are capable of booting UEFI-compliant operating systems, BIOS-based operating systems, and BIOS-based adapters as well as UEFI-compliant adapters.

  Note: The server does not support DOS (Disk Operating System).

Reliability, availability, and serviceability

Three important computer design features are reliability, availability, and serviceability (RAS). The RAS features help to ensure the integrity of the data that is stored in the server, the availability of the server when you need it, and the ease with which you can diagnose and correct problems.

Your server has the following RAS features:

- 3-year parts and 3-year labor limited warranty, or 5-year parts and 5-year labor limited warranty (Machine Type 8693)
- 24-hour support center
- Automatic error retry and recovery
- Automatic restart on nonmaskable interrupt (NMI)
- Automatic restart after a power failure
- Back up basic input/output system switching under the control of the integrated management module (IMM)
- Built-in monitoring for fan, power, temperature, voltage, and power-supply redundancy
- Cable-presence detection on most connectors
- Chipkill memory protection
- Double-device data correction (DDDC) for x4 DRAM technology DIMMs (available on 16 GB DIMMs only). Ensures that data is available on a single x4 DRAM DIMM after a hard failure of up to two DRAM DIMMs. One x4 DRAM DIMM in each rank is reserved as a space device.
- Diagnostic support for Ethernet adapters
- Error codes and messages
- Error correcting code (ECC) L3 cache and system memory
- Full Array Memory Mirroring (FAMM) redundancy
- Hot-swap cooling fans with speed-sensing capability
- Hot-swap hard disk drives
- Integrated Management Module (IMM)
- Memory mirroring and memory sparing support
- Memory error correcting code and parity test
- Memory down sizing (non-mirrored memory). After a restart of the server after the memory controller detected a non-mirrored uncorrectable error and the memory controller cannot recover operationally, the IMM logs the uncorrectable error and informs POST. POST logically maps out the memory with the uncorrectable error, and the server restarts with the remaining installed memory.
- Menu-driven setup, system configuration, and redundant array of independent disks (RAID) configuration programs
- Microprocessor built-in self-test (BIST), internal error signal monitoring, internal thermal trip signal monitoring, configuration checking, and microprocessor and voltage regulator module failure identification through light path diagnostics
- Nonmaskable interrupt (NMI) button
- Parity checking on the small computer system interface (SCSI) bus and PCI-E and PCI buses
- Power management: Compliance with Advanced Configuration and Power Interface (ACPI)
- Power-on self-test (POST)
- Proactive Platform Alerts (including Predictive Failure Analysis and Self-Monitoring, Analysis and Reporting Technology alerts): microprocessors, voltage regulators, memory, internal storage (SAS/SATA hard disk drives and solid-state drives, NVMe solid-state drives, M.2 storage, flash storage adapters), fans, power supplies, RAID controllers, and server ambient and sub-component temperatures
- Redundant Ethernet capabilities with failover support
- Redundant hot-swap power supplies and redundant hot-swap fans
- Redundant network interface card (NIC) support
- Remind button to temporarily turn off the system-error LED
- Remote system problem-determination support
- ROM-based diagnostics
- ROM checksums
- Serial Presence Detection (SPD) on memory, VPD on system board, power supply, and hard disk drive or solid-state drive backplanes, microprocessor and memory expansion tray, and Ethernet cards
- Single-DIMM isolation of excessive correctable error or multi-bit error by the Unified Extensible Firmware Interface (UEFI)
- Solid-state drives
- Standby voltage for system-management features and monitoring
- Startup (boot) from LAN through remote initial program load (RIPL) or dynamic host configuration protocol/boot protocol (DHCP/BOOTP)

- System auto-configuring from the configuration menu
- System-error logging (POST and IMM)
- Systems-management monitoring through the Inter-Integrated Circuit (IC) protocol bus
- Uncorrectable error (UE) detection
- Upgradeable POST, Unified Extensible Firmware Interface (UEFI), diagnostics, IMM firmware, and read-only memory (ROM) resident code, locally or over the LAN
- Vital product data (VPD) on microprocessors, system board, power supplies, and SAS/SATA (hot-swap hard disk drive or solid-state drive) backplane
- Wake on LAN capability

Server controls, LEDs, and power

This section describes the controls and light-emitting diodes (LEDs) and how to turn the server on and off.

For the locations of other LEDs on the system board, see "System-board LEDs" on page 24.

Front view

The following illustrations show the controls, LEDs, and connectors on the front of your server model.

Figure 5. Front view: HX1310, HX3310, and HX3310-F

Figure 6. Front view: HX2310-E

- **Rack release latches:** Press the latches on each front side of the server to remove the server from the rack.
- **Hard disk drive activity LEDs:** This LED is used on hot-swap SAS or SATA hard disk drives. Each hot-swap hard disk drive has an activity LED, and when this LED is flashing, it indicates that the drive is in use.
- **Hard disk drive status LEDs:** This LED is used on hot-swap SAS or SATA hard disk drives. When this LED is lit, it indicates that the drive has failed.
- **Operator information panel:** Use this information for an overview of the connectors, LEDs, and buttons on the server front operator panel.
- **LCD system information display panel:** Use this information for an overview of the LCD system information display panel, which displays various types of information about the server.
- **Video connector:** Connect a monitor to this connector. The video connectors on the front and rear of the server can be used simultaneously.

  Note: The maximum video resolution is 1600 x 1200 at 75 Hz.
- **USB connectors:** Connect a USB device, such as a USB mouse or keyboard to any of these connectors.

Operator information panel

The following illustration shows the controls and LEDs on the operator information panel.

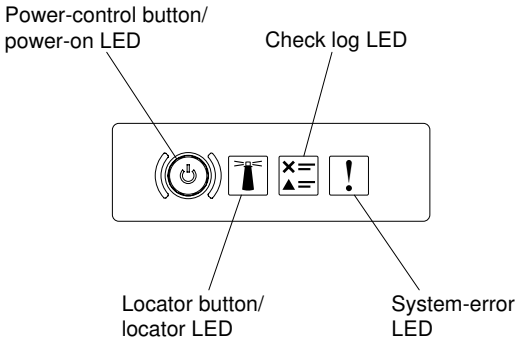

Figure 7. Operator information panel

- **Power-control button and power-on LED:** Press this button to turn the server on and off manually. The states of the power-on LED are as follows:

  Off: Power is not present or the power supply, or the LED itself has failed.

  Flashing rapidly (four times per second): The server is turned off and is not ready to be turned on. The power-control button is disabled. This will last approximately 20 seconds.

  Flashing slowly (once per second): The server is turned off and is ready to be turned on. You can press the power-control button to turn on the server.

  Lit: The server is turned on.
- **System-locator button/LED:** Use this blue LED to visually locate the server among other servers. A system-locator LED is also on the rear of the server. This LED is used as a presence detection button as well. You can use Systems Director or IMM Web interface to light this LED remotely. This LED is controlled by the IMM. The locator button is pressed to visually locate the server among the others servers.
- **Check log LED:** When this yellow LED is lit, it indicates that a system error has occurred. Check the event log for additional information. See "Event logs" on page 57 for more information about event logs.
- **System-error LED:** When this yellow LED is lit, it indicates that a system error has occurred. A system-error LED is also on the rear of the server. An LED on the operator information panel or on the system board is also lit to help isolate the error. This LED is controlled by the IMM.

LCD operating panel assembly

Use this information for an overview of the LCD operating panel assembly, which displays various types of information about the server.

The LCD operating panel assembly is on the front of the server. It enables you to have quick access to system status, firmware, network, and health information. The following illustration shows the controls on the LCD operating panel assembly.

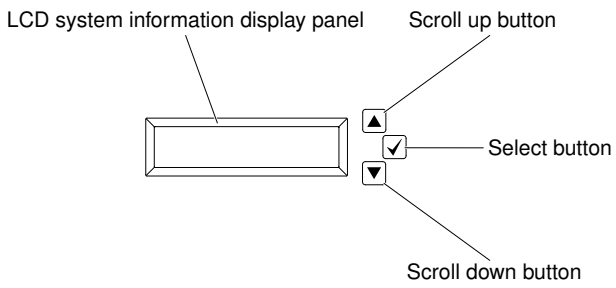

Figure 8. LCD operating panel assembly

- **Scroll up button:** Press this button to scroll up or scroll to the left in the main menu to locate and select the system information that you want displayed.
- **Select button:** Press this button to make your selection from the menu options.
- **Scroll down button:** Press this button to scroll down or scroll to the right in the main menu to location and select the system information that you want displayed.

The following is an illustration of the LCD operating panel assembly menu options flow.

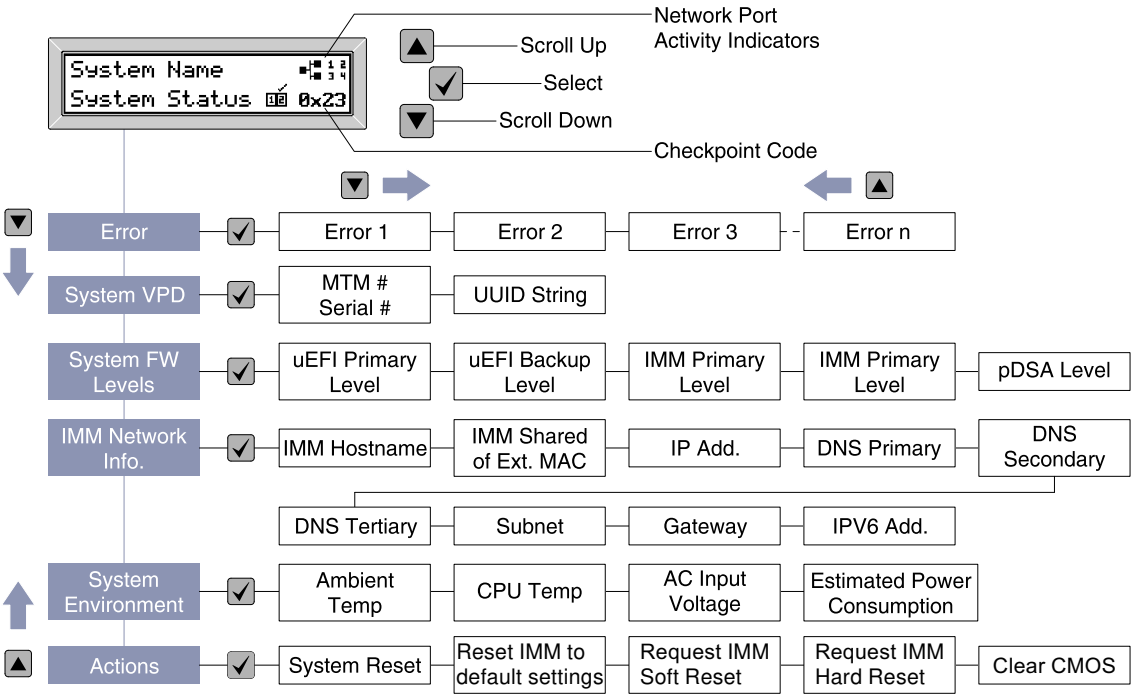

Figure 9. LCD operating panel assembly menu options flow

The following is an example of the information that you will see on the display panel. This example shows the layout of the information in the main menu when the debug feature is enabled.

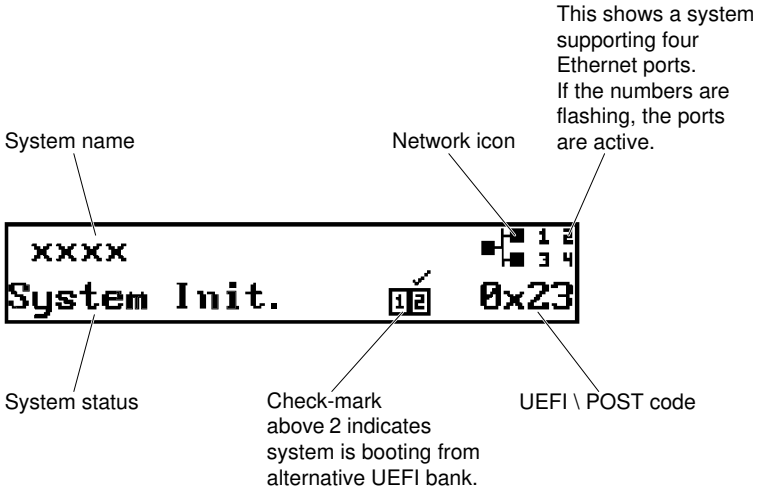

Figure 10. Main menu

When you navigate through the hierarchy of the menu options on the LCD operating panel assembly, the display panel shows the information for that option and the up and down arrows appear on the side of the display panel. When you get to the bottom of the hierarchy of the menu options, only the up arrow will be available. When you are at the top of the hierarchy of the menu options, only the down arrow will be available.

For the errors submenu set, if only one error occurs, the LCD display panel will display that error. If more than one error occurs, the LCD display panel displays the number of errors that have occurred. If no errors occur, the no error menu will be available for navigation.

To move within the menu options, use the Scroll up or Scroll down buttons, then the Select button to enter a submenu set.

The LCD operating panel assembly displays the following types of information about the server:

- IMM system error log (SEL)

  Note: The Scroll Down button will only function for this menu option if errors have occurred. A list of current errors reported by the system will be displayed. To see the system error log (SEL) and get the complete list of errors, go to the IMM Web page (see "Logging on to the Web interface" on page 39).
- System VPD information:
  - Machine type and serial number
  - Universal Unique Identifier (UUID) string
- System firmware levels:
  - UEFI code level
  - IMM code level
  - pDSA code level
- IMM network information:
  - IMM hostname
  - IMM dedicated MAC address

    Note: Only the MAC address that is currently in use is displayed (dedicated or shared)

  - IMM shared MAC address
  - IP v4 information
  - IP v6 address
- System environmental information:
  - Ambient temperature
  - CPU temperature
  - AC input voltage
  - Estimated power consumption

Rear view

The following illustrations show the connectors on the rear of the server.

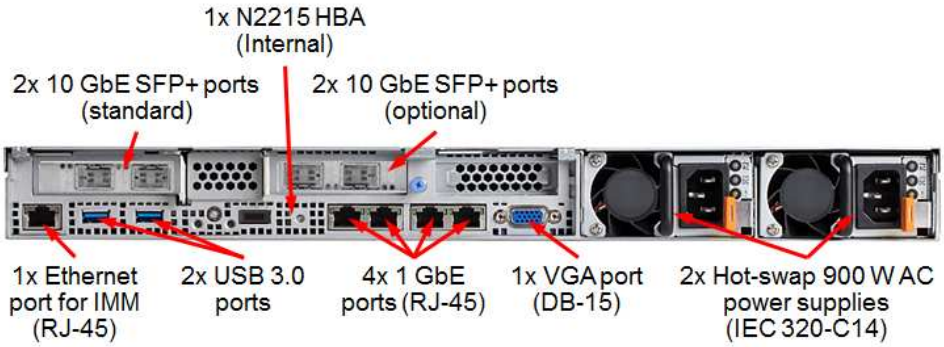

Figure 11. Rear view (HX3310 shown)

- **PCI slot 1:** low-profile PCI Express adapter (NIC) – optional on HX1310 and HX2310-E, standard on other models
- **PCI slot 2:** option second PCI Express adapter (NIC) – only on HX3310 and HX3310-F
- **PCI slot 3:** empty
- **Ethernet connectors:** Use either of these connectors to connect the server to a network.
- **System-management Ethernet connector:** Use this connector to connect the server to a network for full systems-management information control. This connector is used only by the integrated management module (IMM2.1). A dedicated management network provides additional security by physically separating the management network traffic from the production network. In shared mode, depending on the network environment, the IMM might disconnect from the network for a short time when the server restarts. You can use the Setup Utility to configure the server to use a dedicated systems management network or a shared network.
- **USB connectors:** Connect a USB device, such as a USB mouse or keyboard to any of these connectors.
- **NMI button:** Press this button to force a nonmaskable interrupt to the microprocessor. It allows you to blue screen the server and take a memory dump (use this button only when directed by the Lenovo service support). You might have to use a pen or the end of a straightened paper clip to press the button. The NMI button is in the lower left-hand corner on the rear of the server.
- **Video connector:** Connect a monitor to this connector. The video connectors on the front and rear of the server can be used simultaneously.

  Note: The maximum video resolution is 1600 x 1200 at 75 Hz.
- **Power cord connector:** Connect the power cord to this connector.

Note: The power supply 1 is the default/primary power supply. If the power supply 1 fails, you must replace it immediately.

The following illustration shows the LEDs on the rear of the server.

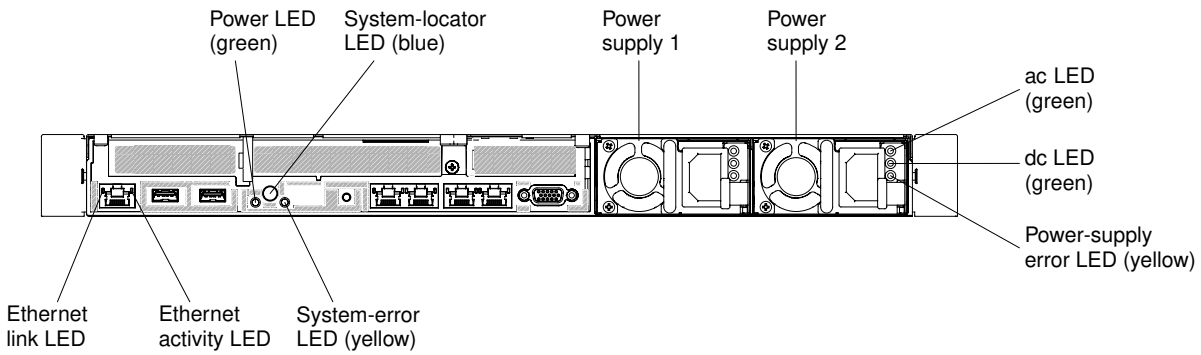

Figure 12. LEDs on the rear

- **Ethernet link LEDs:** When these LEDs are lit, they indicate that there is an active link connection on the 10BASE-T, 100BASE-TX, or 1000BASE-TX interface for the Ethernet port.
- **Ethernet activity LEDs:** When these LEDs are lit, they indicate that the server is transmitting to or receiving signals from the Ethernet LAN that is connected to the Ethernet port.
- **Power-on LED:** When this LED is lit and not flashing, it indicates that the server is turned on. The states of the power-on LED are as follows:

  Off: Power is not present, or the power supply or the LED itself has failed.

  Flashing rapidly (four times per second): The server is turned off and is not ready to be turned on. The power-control button is disabled. This lasts approximately 20 seconds.

  Flashing slowly (once per second): The server is turned off and is ready to be turned on. You can press the power-control button to turn on the server.

  Lit: The server is turned on.
- **System-locator LED:** Use this LED to visually locate the server among other servers. You can use Systems Director or IMM2.1 Web interface to light this LED remotely.
- **System-error LED:** When this LED is lit, it indicates that a system error has occurred. An LED on the operator information panel is also lit to help isolate the error.
- **dc power LED:** Each hot-swap ac power supply has a dc power LED. When the dc power LED is lit, it indicates that the power supply is supplying adequate dc power to the system. During typical operation, both the ac and dc power LEDs are lit. For any other combination of LEDs, see "ac power-supply LEDs" on page 54.
- **ac power LED:** Each hot-swap ac power supply has an ac power LED. When the ac power LED is lit, it indicates that sufficient power is coming into the power supply through the power cord. During typical operation, the ac power LED is lit. For any other combination of LEDs, see "ac power-supply LEDs" on page 54.
- **Power-supply error LED:** When the power-supply error LED is lit, it indicates that the power supply has failed.

  Note: The power supply 1 is the default/primary power supply. If the power supply 1 fails, you must replace the power supply immediately.

Server components

The following illustration shows the major components in the server.

Depending on the model, your server might look slightly different from the illustration in this topic.

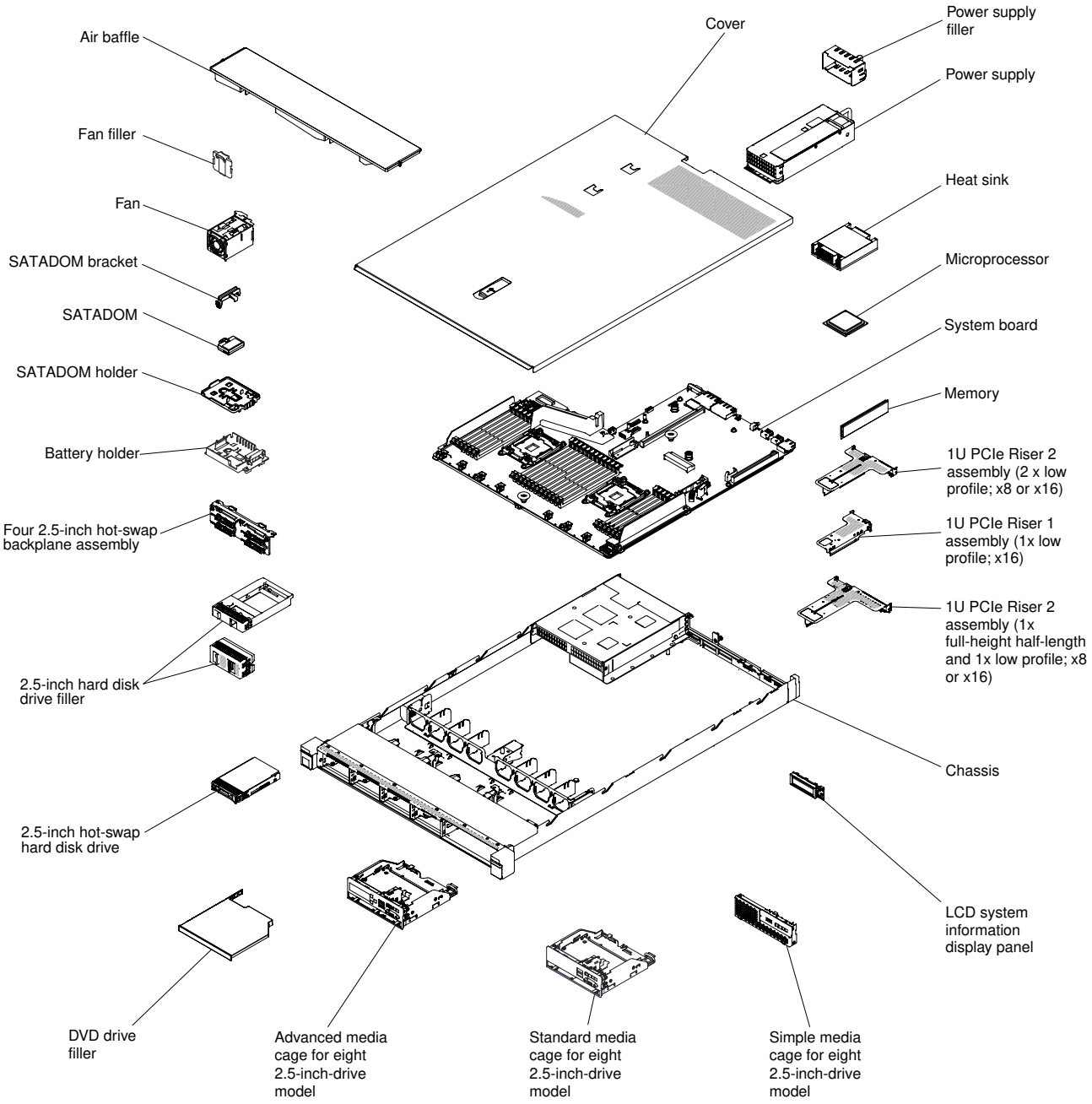

Figure 13. Server components

Blue on a component indicates touch points, where you can grip the component to remove it from or install it in the server, open or close a latch, and so on.

Orange on a component or an orange label on or near a component indicates that the component can be hot-swapped, which means that if the server and operating system support hot-swap capability, you can

remove or install the component while the server is running. Orange can also indicate touch points on hot-swap components. See the instructions for removing or installing a specific hot-swap component for any additional procedures that you might have to perform before you remove or install the component.

System-board internal connectors

The following illustration shows the internal connectors on the system board.

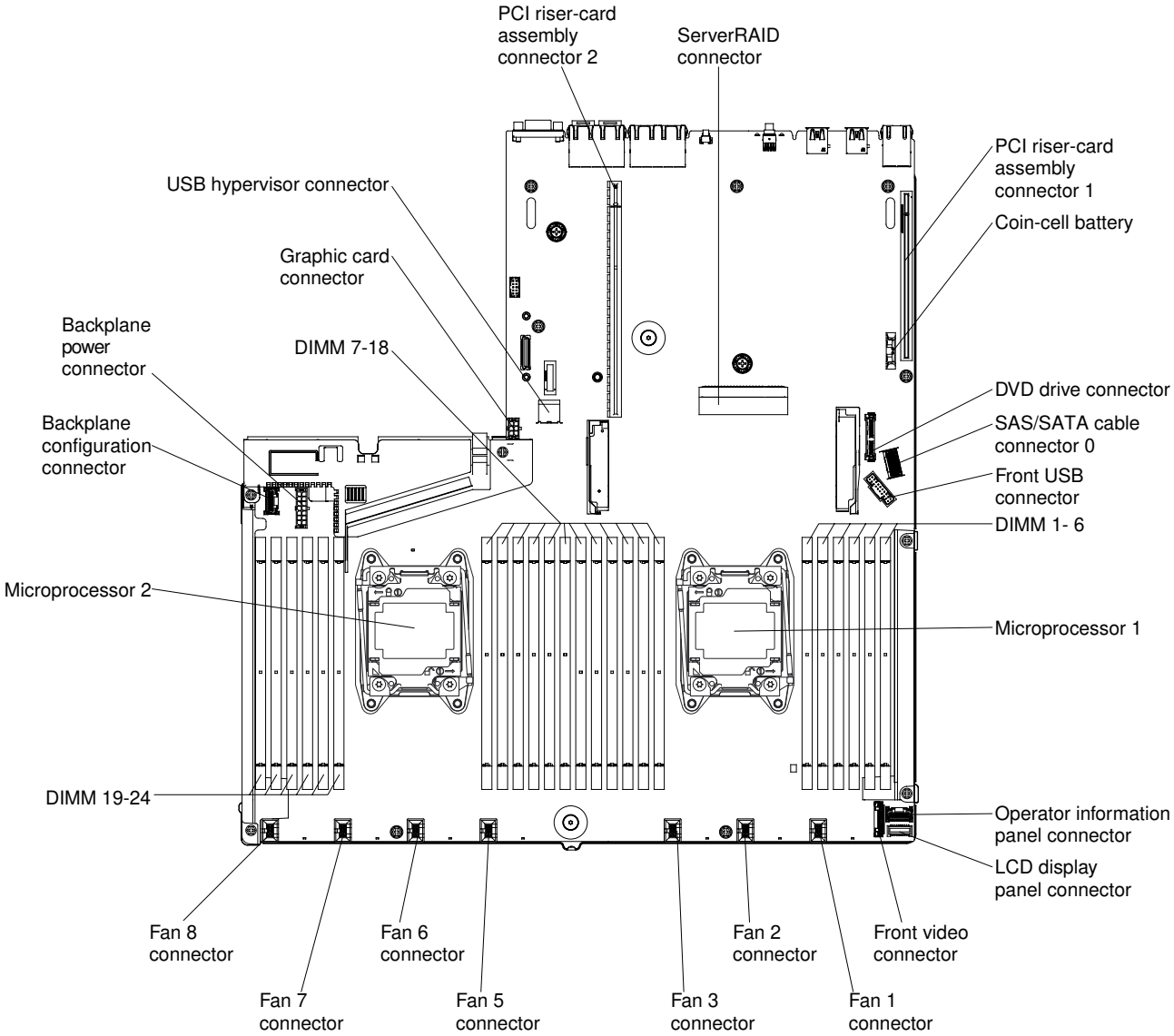

Figure 14. System-board internal connectors

System-board external connectors

The following illustration shows the external connectors on the system board.

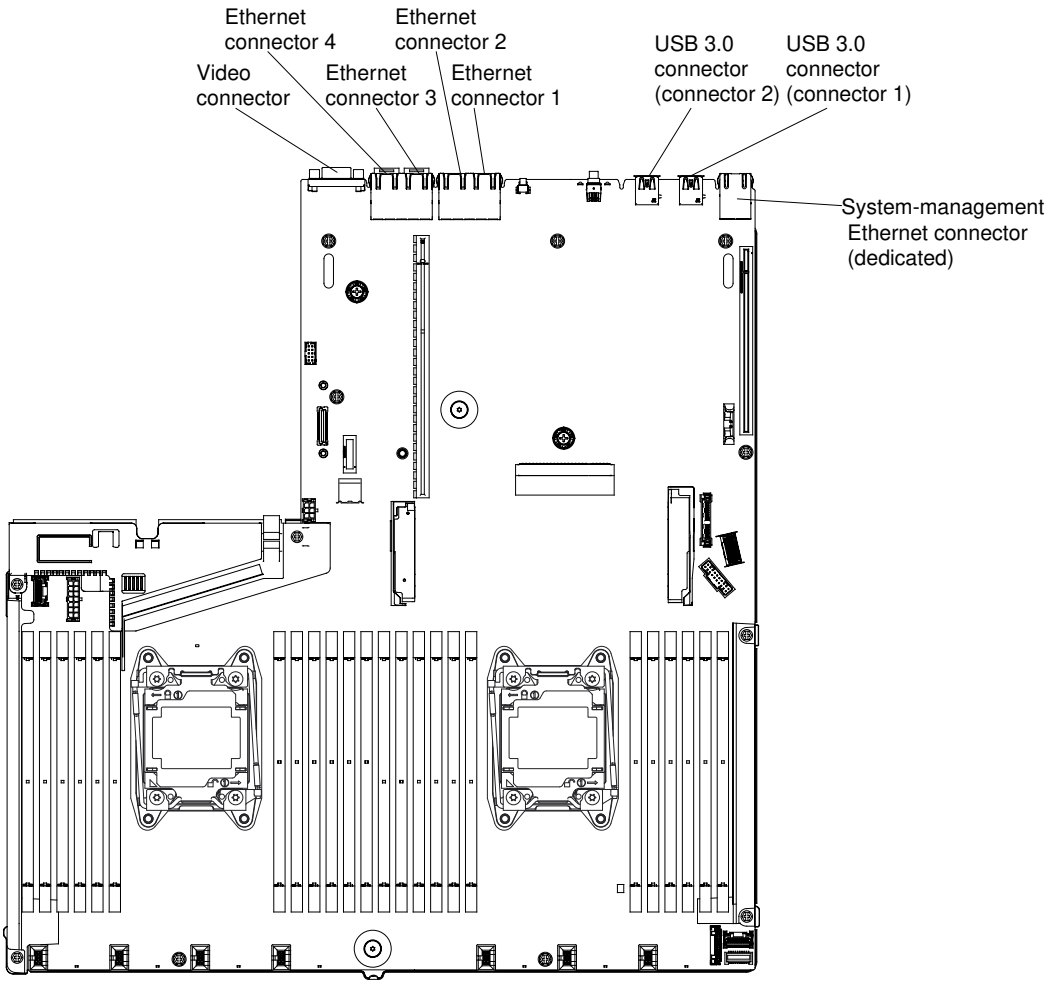

Figure 15. System-board external connectors

System-board switches, jumpers, and buttons

The following illustration shows the location of the switches, jumpers, and buttons on the server.

Important:

- Before you change any switch settings or move any jumpers, turn off the server; then, disconnect all power cords and external cables. Review the information in "Safety" on page v, "Installation guidelines" on page 108, "Handling static-sensitive devices" on page 110, and "Turning off the server" on page 26.
- Any system-board switch or jumper block that is not shown in the illustrations in this document are reserved.
- If there is a clear protective sticker on the top of the switch blocks, you must remove and discard it to access the switches.

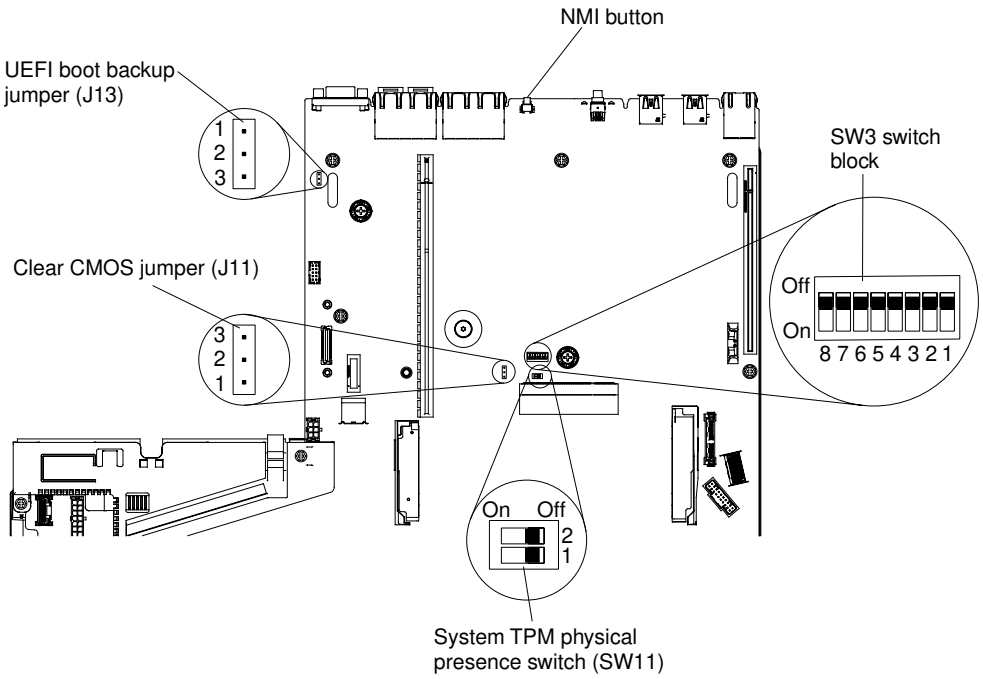

Figure 16. System-board switches, jumpers, and buttons

The following table describes the jumpers on the system board.

Table 1. System board jumpers

Jumper number	Jumper name	Jumper setting
J11	Clear CMOS jumper	• Pins 1 and 2: Normal (default). • Pins 2 and 3: Clears the real-time clock (RTC) registry.
J13	UEFI boot backup jumper	• Pins 1 and 2: Normal (default). Loads the primary server firmware ROM page. • Pins 2 and 3: Loads the secondary (backup) server firmware ROM page.
Notes: • If no jumper is present, the server responds as if the pins are set to the default. • Changing the position of the UEFI boot backup jumper (J13) from pins 1 and 2 to pins 2 and 3 before the server is turned on alters which flash ROM page is loaded. Do not change the jumper pin position after the server is turned on. This can cause an unpredictable problem.		

The following table describes the functions of the SW3 switch block on the system board.

Table 2. System board SW3 switch block definition

Switch number	Default position	Description
1	Off	Reserved.
2	Off	Power-on password override. Changing the position of this switch bypasses the power-on password check the next time the server is turned on and starts the Setup Utility so that you can change or delete the power-on password. You do not have to move the switch back to the default position after the power-on password in overridden. Changing the position of this switch does not affect the administrator password check if an administrator password is set. See the user security section in "Setup Utility menu choices" on page 32 for additional information about passwords.
3	Off	Reserved
4	Off	Reserved

The following table describes the functions of the SW11 switch block on the system board.

Table 3. System board SW11 switch block definition

Switch number	Default position	Description
1	Off	Indicates a physical presence to the system TPM
2	Off	Reserved

The following table describes the functions of the button on the system board.

Table 4. Button on the server

Button name	Function
Force NMI button	This button is on the rear of the server. Press this button to force a nonmaskable interrupt to the microprocessor. You might have to use a pen or the end of a straightened paper clip to press the button. You can also use it to force a blue-screen memory dump (use this button only when you are directed to do so by Lenovo Support).

System-board LEDs

The following illustration shows the light-emitting diodes (LEDs) on the system board.

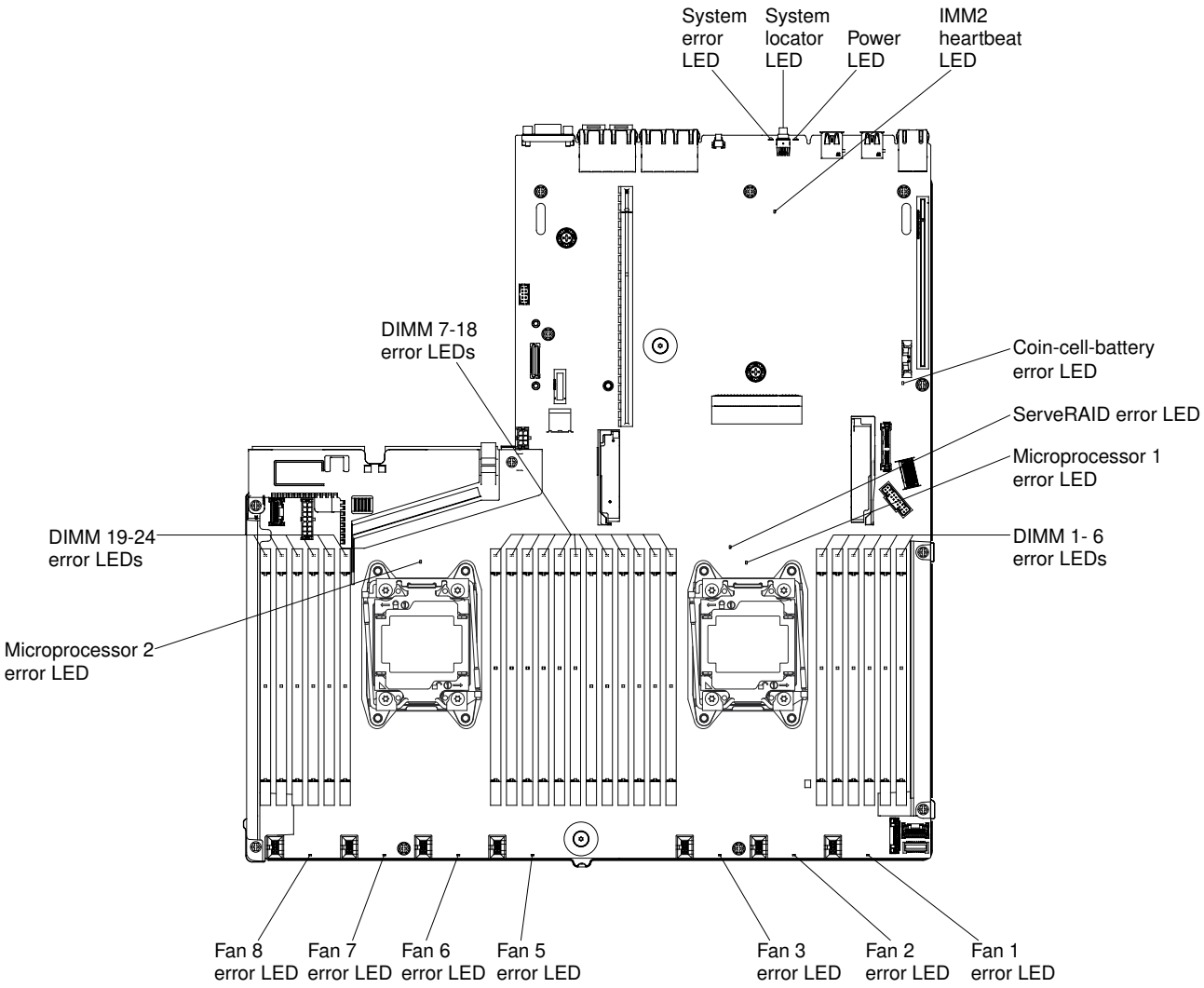

Figure 17. System-board LEDs

Server power features

When the server is connected to an ac power source but is not turned on, the operating system does not run, and all core logic except for the integrated management module is shut down.

However, the server can respond to requests from IMM, such as a remote request to turn on the server. The power-on LED flashes to indicate that the server is connected to an ac power source but is not turned on.

Turning on the server

Use this information to turn on the server.

Approximately five seconds after the server is connected to power, one or more fans might start running to provide cooling while the server is connected to power and the power-on button LED will blink quickly. Approximately 20 seconds after the server is connected to power, the power-control button becomes active (the power-on LED will blink slowly), and one or more fans might start running to provide cooling while the server is connected to power. You can turn on the server by pressing the power-control button.

The server can also be turned on in any of the following ways:

- If a power failure occurs while the server is turned on, the server will restart automatically when power is restored.
- If your operating system supports the Wake on LAN feature, the Wake on LAN feature can turn on the server.

Notes:

- When 4 GB or more of memory (physical or logical) is installed, some memory is reserved for various system resources and is unavailable to the operating system. The amount of memory that is reserved for system resources depends on the operating system, the configuration of the server, and the configured PCI options.
- The Ethernet 1 connector supports Wake on LAN feature.
- When you turn on the server with the graphical adapters installed, the Lenovo logo displays on the screen after approximately three minutes. This is normal operation while the system loads.

Turning off the server

Use this information to turn off the server.

When you turn off the server and leave it connected to power, the server can respond to requests to the service processor, such as a remote request to turn on the server. While the server remains connected to power, one or more fans might continue to run. To remove all power from the server, you must disconnect it from the power source.

Some operating systems require an orderly shutdown before you turn off the server. See your operating-system documentation for information about shutting down the operating system.

CAUTION:
The power control button on the device and the power switch on the power supply do not turn off the electrical current supplied to the device. The device also might have more than one power cord. To remove all electrical current from the device, ensure that all power cords are disconnected from the power source.

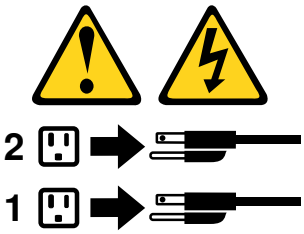

The server can be turned off in any of the following ways:

- You can turn off the server from the operating system, if your operating system supports this feature. After an orderly shutdown of the operating system, the server will turn off automatically.
- You can press the power-control button to start an orderly shutdown of the operating system and turn off the server, if your operating system supports this feature.
- If the operating system stops functioning, you can press and hold the power-control button for more than four seconds to turn off the server.
- The server can be turned off by Wake on LAN feature with the following limitation:

Note: When you install any PCI adapter, the power cords must be disconnected from the power source before you remove the PCI Express riser-card assembly. Otherwise, the Wake on LAN feature might not work.

- The Integrated Management Module II (IMM2) can turn off the server as an automatic response to a critical system failure.

Chapter 2. Configuring

This chapter provides information about updating the firmware, using the configuration utilities, and configuring the firmware specifically for the Lenovo Converged HX Series appliances.

Updating the firmware

Use this information to update the firmware.

Important:

- Some cluster solutions require specific code levels or coordinated code updates. If the device is part of a cluster solution, verify that the latest level of code is supported for the cluster solution before you update the code.
- Before you update the firmware, be sure to back up any data that is stored in the Trusted Platform Module (TPM), in case any of the TPM characteristics are changed by the new firmware. For instructions, see your encryption software documentation.
- Installing the wrong firmware or device-driver update might cause the server to malfunction. Before you install a firmware or device-driver update, read any readme and change history files that are provided with the downloaded update. These files contain important information about the update and the procedure for installing the update, including any special procedure for updating from an early firmware or device-driver version to the latest version.

You can install code updates that are packaged as an Update*Xpress* System Pack or Update*Xpress* CD image. An Update*Xpress* System Pack contains an integration-tested bundle of online firmware and device-driver updates for your server. Use Update*Xpress* System Pack Installer to acquire and apply Update*Xpress* System Packs and individual firmware and device-driver updates. For additional information and to download the Update*Xpress* System Pack Installer, go to the ToolsCenter for System x and BladeCenter at https://support.lenovo.com/us/en/ documents/LNVO-CENTER and click **UpdateXpress System Pack Installer**.

When you click an update, an information page is displayed, including a list of the problems that the update fixes. Review this list for your specific problem; however, even if your problem is not listed, installing the update might solve the problem.

Be sure to separately install any listed critical updates that have release dates that are later than the release date of the Update*Xpress* System Pack or Update*Xpress* image.

The firmware for the server is periodically updated and is available for download on the Lenovo Web site. To check for the latest level of firmware, such as the UEFI firmware, device drivers, and integrated management module (IMM) firmware, go to http://www.ibm.com/support/ fixcentral.

Download the latest firmware for the server; then, install the firmware, using the instructions that are included with the downloaded files.

When you replace a device in the server, you might have to update the firmware that is stored in memory on the device or restore the pre-existing firmware from a CD or DVD image.

The following list indicates where the firmware is stored:

- UEFI firmware is stored in ROM on the system board.
- IMM2.1 firmware is stored in ROM on the system board.

© Copyright Lenovo 2016, 2023

- Ethernet firmware is stored in ROM on the Ethernet controller and on the system board.
- HBA firmware is stored in ROM on the HBA adapter.

Configuring the server

This section describes the general configuration of the server. The next section describes the specific procedures for the Lenovo Converged HX Series appliances.

The following configuration programs come with the server:

- **Setup Utility**

  The Setup Utility is part of the UEFI firmware. Use it to perform configuration tasks such as changing interrupt request (IRQ) settings, changing the startup-device sequence, setting the date and time, and setting passwords. For information about using this program, see "Using the Setup Utility" on page 31.

- **Boot Manager program**

  The Boot Manager is part of the UEFI firmware. Use it to override the startup sequence that is set in the Setup Utility and temporarily assign a device to be first in the startup sequence. For more information about using this program, see "Using the Boot Manager" on page 36.

- **Integrated management module**

  Use the integrated management module 2.1 (IMM2.1) for configuration, to update the firmware and sensor data record/field replaceable unit (SDR/FRU) data, and to remotely manage a network. For information about using the IMM, see "Using the integrated management module" on page 36 and the *Integrated Management Module II User's Guide* at https://pubs.lenovo.com/imm2/product_page.html.

- **Remote presence capability and blue-screen capture**

  The remote presence and blue-screen capture features are integrated functions of the integrated management module 2.1 (IMM2.1). The remote presence feature provides the following functions:

  - Remotely viewing video with graphics resolutions up to 1600 x 1200 at 75 Hz, regardless of the system state
  - Remotely accessing the server, using the keyboard and mouse from a remote client
  - Mapping the CD or DVD drive, diskette drive, and USB flash drive on a remote client, and mapping ISO and diskette image files as virtual drives that are available for use by the server
  - Uploading a diskette image to the IMM memory and mapping it to the server as a virtual drive

  The blue-screen capture feature captures the video display contents before the IMM restarts the server when the IMM detects an operating-system hang condition. A system administrator can use the blue-screen capture feature to assist in determining the cause of the hang condition. For more information, see "Using the remote presence and blue-screen capture features" on page 37.

- **Ethernet controller configuration**

  For information about configuring the Ethernet controller, see "Configuring the Ethernet controller" on page 39.

- **Features on Demand software Ethernet software**

  The server provides Features on Demand software Ethernet support. You can purchase a Features on Demand software upgrade key for Fibre Channel over Ethernet (FCoE) and iSCSI storage protocols. For more information, see "Enabling Features on Demand Ethernet software" on page 40.

- **Lenovo ToolsCenter Suite CLI**

  Lenovo ToolsCenter Suite CLI is a collection of server management tools that utilize a command line interface program to manage firmware, hardware, and operating systems. And it covers the configuration

function, which is an alternative to the Setup Utility for modifying UEFI settings. For more information about using this program, see "Lenovo ToolsCenter Suite CLI program" on page 40.

- **Lenovo XClarity Administrator**

  Lenovo XClarity Administrator is a centralized resource-management solution that enables administrators to deploy infrastructure faster and with less effort. The solution seamlessly integrates into System x, ThinkServer, and NeXtScale servers, as well as the Flex System converged infrastructure platform.

  Lenovo XClarity Administrator provides the following features:

  - Intuitive graphical user interface
  - Automated discovery and inventory
  - Firmware updates and compliance
  - Configuration patterns
  - Bare metal deployment
  - Security management
  - Upward integration
  - Representational state transfer (REST) application programming interfaces and Windows PowerShell
  - Simple network management protocol (SNMP), system log, and e-mail forwarding

  For more information, see "Using Lenovo XClarity Administrator" on page 40.

Using the Setup Utility

Use these instructions to start the Setup Utility.

Use the Unified Extensible Firmware Interface (UEFI) Setup Utility program to perform the following tasks:

- View configuration information
- View and change assignments for devices and I/O ports
- Set the date and time
- Set and change passwords
- Set the startup characteristics of the server and the order of startup devices
- Set and change settings for advanced hardware features
- View, set, and change settings for power-management features
- View and clear error logs
- Change interrupt request (IRQ) settings
- Resolve configuration conflicts

Starting the Setup Utility

Use this information to start the Setup Utility.

To start the Setup Utility, complete the following steps:

Step 1. Turn on the server.

Note: Approximately 20 seconds after the server is connected to power, the power-control button becomes active.

Step 2. When the prompt `<F1> Setup` is displayed, press F1. If you have set an administrator password, you must type the administrator password to access the full Setup Utility menu. If you do not type the administrator password, a limited Setup Utility menu is available.

Step 3. Select settings to view or change.

Setup Utility menu choices

Use the Setup Utility main menu to view and configure server configuration data and settings.

The following choices are on the Setup Utility main menu for the UEFI. Depending on the version of the firmware, some menu choices might differ slightly from these descriptions.

- **System Information**

  Select this choice to view information about the server. When you make changes through other choices in the Setup Utility, some of those changes are reflected in the system information; you cannot change settings directly in the system information. This choice is on the full Setup Utility menu only.

  - **System Summary**

    Select this choice to view configuration information, including the ID, speed, and cache size of the microprocessors, machine type and model of the server, the serial number, the system UUID, and the amount of installed memory. When you make configuration changes through other options in the Setup Utility, the changes are reflected in the system summary; you cannot change settings directly in the system summary.

  - **Product Data**

    Select this choice to view the system-board identifier, the revision level or issue date of the firmware, the integrated management module and diagnostics code, and the version and date.

  This choice is on the full Setup Utility menu only.

- **System Settings**

  Select this choice to view or change the server component settings.

  - **Adapters and UEFI Drivers**

    Select this choice to view information about the UEFI 1.10 and UEFI 2.0 compliant adapters and drivers installed in the server.

  - **Processors**

    Select this choice to view or change the processor settings.

  - **Memory**

    Select this choice to view or change the memory settings.

  - **Devices and I/O Ports**

    Select this choice to view or change assignments for devices and input/output (I/O) ports. You can configure the serial ports, configure remote console redirection, enable or disable PCI slots and video controller. If you disable a device, it cannot be configured, and the operating system will not be able to detect it (this is equivalent to disconnecting the device).

  - **Power**

    Select this choice to view or change power capping to control consumption, processors, and performance states.

  - **Operating Modes**

    Select this choice to view or change the operating profile (performance and power utilization).

- **Legacy Support**

  Select this choice to view or set legacy support.

  Note: In the legacy mode, your server spares limited ROM space for installed options. During legacy PXE boot, only four network interface cards (NICs) are supported and the extra NICs are disabled automatically. To enable the desired NIC connectors during legacy PXE boot, prioritize the desired NIC connectors by changing the **Rom Execution Order** or disable the undesired NIC connectors from the **Enable/Disable Adapter Option ROM Support** menu.

  - **Force Legacy Video on Boot**

    Select this choice to force INT video support, if the operating system does not support UEFI video output standards.
  - **Rehook INT 19h**

    Select this choice to enable or disable devices from taking control of the boot process. The default is **Disable**.
  - **Legacy Thunk Support**

    Select this choice to enable or disable UEFI to interact with PCI mass storage devices that are non-UEFI compliant. The default is **Enable**.
  - **Infinite Boot Retry**

    Select this choice to enable or disable UEFI to infinitely retry the legacy boot order. The default is **Disable**.
  - **BBS Boot**

    Select this choice to enable or disable legacy boot in BBS manner. The default is **Enable**.
- **System Security**

  Select this choice to view or configure Trusted Platform Module (TPM) support.
- **Integrated Management Module**

  Select this choice to view or change the settings for the integrated management module.

  - **Power Restore Policy**

    Select this choice to set the mode of operation after the power lost.
  - **Commands on USB Interface**

    Select this choice to enable or disable the Ethernet over USB interface on IMM. The default is **Enable**.
  - **Network Configuration**

    Select this choice to view the system management network interface port, the IMM MAC address, the current IMM IP address, and host name; define the static IMM IP address, subnet mask, and gateway address, specify whether to use the static IP address or have DHCP assign the imm2.1 IP address, save the network changes, and reset the IMM.
  - **Reset IMM to Defaults**

    Select this choice to view or reset IMM to the default settings.
  - **Reset IMM**

    Select this choice to reset IMM.
- **Recovery**

  Select this choice to view or change the system recovery parameters.

- **POST Attempts**

  Select this choice to view or change the number of attempts to POST.

  - **POST Attempts Limit**

    Select this choice to view or change the Nx boot failure parameters.

- **System Recovery**

  Select this choice to view or change system recovery settings.

  - **POST Watchdog Timer**

    Select this choice to view or enable the POST watchdog timer.

  - **POST Watchdog Timer Value**

    Select this choice to view or set the POST loader watchdog timer value.

  - **Reboot System on NMI**

    Select this choice to enable or disable restarting the system whenever a nonmaskable interrupt (NMI) occurs. **Enable** is the default.

  - **Halt on Severe Error**

    Select this choice to enable or disable the system from booting into OS, displaying the POST event viewer whenever a severe error was detected. **Disable** is the default.

- **Storage**

  Select this choice to view or change the storage device settings.

- **Network**

  Select this choice to view or change the network device options, such as iSCSI.

- **Drive Health**

  Select this choice to view the status of the controllers installed in the blade server.

- **Date and Time**

  Select this choice to set the date and time in the server, in 24-hour format (*hour*:*minute*:*second*).

  This choice is on the full Setup Utility menu only.

- **Start Options**

  Select this choice to view or change the start options, including the startup sequence, keyboard NumLock state, PXE boot option, and PCI device boot priority. Changes in the startup options take effect when you start the server.

  The startup sequence specifies the order in which the server checks devices to find a boot record. The server starts from the first boot record that it finds. If the server has Wake on LAN hardware and software and the operating system supports Wake on LAN functions, you can specify a startup sequence for the Wake on LAN functions.

  This choice is on the full Setup Utility menu only.

- **Boot Manager**

  Select this choice to view, add, delete, or change the device boot priority, boot from a file, select a one-time boot, or reset the boot order to the default setting.

- **System Event Logs**

Select this choice to enter the System Event Manager, where you can view the POST event log and the system-event log. You can use the arrow keys to move between pages in the error log. This choice is on the full Setup Utility menu only.

The POST event log contains the most recent error codes and messages that were generated during POST.

The system-event log contains POST and system management interrupt (SMI) events and all events that are generated by the baseboard management controller that is embedded in the integrated management module (IMM).

Important: If the system-error LED on the front of the server is lit but there are no other error indications, clear the system-event log. Also, after you complete a repair or correct an error, clear the system-event log to turn off the system-error LED on the front of the server.

– **POST Event Viewer**

  Select this choice to enter the POST event viewer to view the POST error messages.

– **System Event Log**

  Select this choice to view the system event log.

– **Clear System Event Log**

  Select this choice to clear the system event log.

- **User Security**

  Select this choice to set, change, or clear passwords.

  You can set, change, and delete a power-on password and an administrator password through this selection. If you set a power-on password, you must type the power-on password to complete the system startup and to have access to the Setup Utility menu.

  A password must contain 6 to 20 characters. You can use any combination of alphabetic and numeric characters for passwords. Keep a record of your passwords in a secure place.

  If you forget the power-on password, you can regain access to the server by using the power-on password switch. See Table 2 “System board SW3 switch block definition” on page 24 for more information.

  Attention: If you set an administrator password and then forget it, there is no way to change, override, or remove it. You must replace the system board.

- **Save Settings**

  Select this choice to save the changes that you have made in the settings.

- **Restore Settings**

  Select this choice to cancel the changes that you have made in the settings and restore the previous settings.

- **Load Default Settings**

  Select this choice to cancel the changes that you have made in the settings and restore the factory settings.

- **Exit Setup**

  Select this choice to exit from the Setup Utility. If you have not saved the changes that you have made in the settings, you are asked whether you want to save the changes or exit without saving them.

Using the Boot Manager

The Boot Manager program is a built-in, menu-driven configuration utility program that you can use to temporarily redefine the first startup device without changing settings in the Setup Utility.

To use the Boot Manager program, complete the following steps:

Step 1. Turn off the server.

Step 2. Restart the server.

Step 3. When the prompt `<F12> Select Boot Device` is displayed, press F12.

Step 4. Use the Up arrow and Down arrow keys to select an item from the menu and press Enter.

The next time the server starts, it returns to the startup sequence that is set in the Setup Utility.

Starting the backup server firmware

The system board contains a backup copy area for the server firmware. This is a secondary copy of the server firmware that you update only during the process of updating the server firmware. If the primary copy of the server firmware becomes damaged, use this backup copy.

To force the server to start from the backup copy, turn off the server; then, place the UEFI boot backup jumper (J13) in the backup position (pins 2 and 3). See "System-board switches, jumpers, and buttons" on page 22 for the location of the UEFI boot backup jumper (J13).

Use the backup copy of the server firmware until the primary copy is restored. After the primary copy is restored, turn off the server; then, move the UEFI boot backup jumper (J13) back to the primary position (pins 1 and 2).

The Update*Xpress* System Pack Installer

The Update*Xpress* System Pack Installer detects supported and installed device drivers and firmware in the server and installs available updates.

For additional information and to download the Update*Xpress* System Pack Installer, go to the ToolsCenter for System x and BladeCenter at http://publib.boulder.ibm.com/infocenter/toolsctr/v1r0/ and click **UpdateXpress System Pack Installer**.

Using the integrated management module

The integrated management module (IMM) is a second generation of the functions that were formerly provided by the baseboard management controller hardware. It combines service processor functions, video controller, and remote presence function in a single chip.

The IMM supports the following basic systems-management features:

- Alerts (in-band and out-of-band alerting, PET traps - IPMI style, SNMP, e-mail)
- Auto Boot Failure Recovery (ABR)
- Automatic microprocessor disable on failure and restart in a two-microprocessor configuration when one microprocessor signals an internal error. When one of the microprocessors fail, the server will disable the failing microprocessor and restart with the other microprocessor.
- Automatic Server Restart (ASR) when POST is not complete or the operating system stops responding and the operating system watchdog timer times-out. The IMM might be configured to watch for the operating system watchdog timer and restarts the system after a timeout, if the ASR feature is enabled. Otherwise, the IMM allows the administrator to generate a nonmaskable interrupt (NMI) by pressing the NMI button for an operating-system memory dump. ASR is supported by IPMI.

- A virtual media key, which enables remote presence support (remote video, remote keyboard/mouse, and remote storage).
- Boot sequence manipulation
- Command-line interface
- Configuration save and restore
- DIMM error assistance

  The Unified Extensible Firmware Interface (UEFI) disables a failing DIMM that is detected during POST, and the IMM lights the associated system error LED and the failing DIMM error LED.
- Environmental monitor with fan speed control for temperature, voltages, fan failure, power supply failure, and power backplane failure.
- Intelligent Platform Management Interface (IPMI) Specification V2.0 and Intelligent Platform Management Bus (IPMB) support.
- Invalid system configuration (CONFIG) LED support
- Local firmware code flash update
- Nonmaskable interrupt (NMI) detection and reporting
- Operating-system failure blue screen capture
- PCI configuration data
- Power/reset control (power-on, hard and soft shutdown, hard and soft reset, schedule power control)
- Query power-supply input power
- ROM-based IMM firmware flash updates
- Serial over LAN (SOL)
- Serial port redirection over telnet or ssh
- SMI handling
- System event log (SEL) - user readable event log

The IMM2.1 also provides the following remote server management capabilities through the ipmitool, management utility program:

- **Command-line interface (IPMI Shell)**

  The command-line interface provides direct access to server management functions through the IPMI 2.0 protocol. Use the command-line interface to issue commands to control the server power, view system information, and identify the server. You can also save one or more commands as a text file and run the file as a script.
- **Serial over LAN**

  Establish a Serial over LAN (SOL) connection to manage servers from a remote location. You can remotely view and change the UEFI settings, restart the server, identify the server, and perform other management functions. Any standard Telnet client application can access the SOL connection.

For more information about IMM, see the *Integrated Management Module II User's Guide* at https://pubs.lenovo.com/imm2/product_page.html.

Using the remote presence and blue-screen capture features

The remote presence and blue-screen capture features are integrated functions of the integrated management module 2.1 (IMM2.1).

The remote presence feature provides the following functions:

- Remotely viewing video with graphics resolutions up to 1600 x 1200 at 75 Hz, regardless of the system state
- Remotely accessing the server, using the keyboard and mouse from a remote client
- Mapping the CD or DVD drive, diskette drive, and USB flash drive on a remote client, and mapping ISO and diskette image files as virtual drives that are available for use by the server
- Uploading a diskette image to the IMM memory and mapping it to the server as a virtual drive

The blue-screen capture feature captures the video display contents before the IMM restarts the server when the IMM detects an operating-system hang condition. A system administrator can use the blue-screen capture to assist in determining the cause of the hang condition.

Obtaining the IMM host name

Use this information to obtain the IMM host name.

If you are logging on to the IMM for the first time after installation, the IMM defaults to DHCP. If a DHCP server is not available, the IMM uses a static IP address of 192.168.70.125. The default IPv4 host name is “IMM-” (plus the last 12 characters on the IMM MAC address). The default host name also comes on the IMM network access tag that comes attached to the power supply on the rear of the server. The IMM network access tag provides the default host name of the IMM and does not require you to start the server.

The IPv6 link-local address (LLA) is derived from the IMM default host name. The IMM LLA is on the IMM network access tag is on the power supply on the rear of the server. To derive the link-local address, complete the following steps:

Step 1. Take the last 12 characters on the IMM MAC address (for example, 5CF3FC5EAAD0).

Step 2. Separate the number into pairs of hexadecimal characters (for example, 5C:F3:FC:5E:AA:D0).

Step 3. Separate the first six and last six hexadecimal characters.

Step 4. Add “FF” and “FE” in the middle of the 12 characters (for example, 5C F3 FC FF FE 5E AA D0).

Step 5. Convert the first pair of hexadecimal characters to binary (for example, 5=0101, C=1100, which results in 01011100 F3 FC FF FE 5E AA D0).

Step 6. Flip the seventh binary character from left (0 to 1 or 1 to 0), which results in 01011110 F3 FF FE 5E AA D0.

Step 7. Convert the binary back to hexadecimal (for example, 5E F3FCFFFE5EAAD0).

Obtaining the IP address for the IMM

To access the Web interface to use the remote presence feature, you need the IP address or host name of the IMM. You can obtain the IMM IP address through the Setup Utility and you can obtain the IMM host name from the IMM network access tag.

The server comes with a default IP address for the IMM of 192.168.70.125.

To obtain the IP address, complete the following steps:

Step 1. Turn off the server.

Note: Approximately 20 seconds after the server is connected to power, the power-control button becomes active.

Step 2. When the prompt `<F1> Setup` is displayed, press F1. (This prompt is displayed on the screen for only a few seconds. You must press F1 quickly.) If you have set both a power-on password and an administrator password, you must type the administrator password to access the full Setup Utility menu.

Step 3. From the Setup Utility main menu, select **System Settings**.

Step 4. On the next screen, select **Integrated Management Module**.

Step 5. On the next screen, select **Network Configuration**.

Step 6. Find the IP address and write it down.

Step 7. Exit from the Setup Utility.

Logging on to the Web interface

Use this information to log on to the Web interface.

To log on to the IMM Web interface, complete the following steps:

Step 1. On a system that is connected to the server, open a Web browser. In the **Address** or **URL** field, type the IP address or host name of the IMM to which you want to connect.

Note: If you are logging on to the IMM for the first time after installation, the IMM defaults to DHCP. If a DHCP host is not available, the IMM assigns a static IP address of 192.168.70.125. The IMM network access tag provides the default host name of the IMM and does not require you to start the server.

Step 2. On the Login page, type the user name and password. If you are using the IMM for the first time, you can obtain the user name and password from your system administrator. All login attempts are documented in the system-event log.

Note: The IMM is set initially with a user name of USERID and password of PASSW0RD (with a zero, not the letter O). You have read/write access. You must change the default password the first time you log on.

Step 3. Click **Log in** to start the session. The System Status and Health page provides a quick view of the system status.

Note: If you boot to the operating system while in the IMM GUI and the message `Booting OS or in unsupported OS` is displayed under **System Status → System State**, disable Windows 2008 or 2012 firewall or type the following command in the Windows 2008 or 2012 console. This might also affect blue-screen capture features.

```
netsh firewall set icmpsetting type=8 mode=ENABLE
```

By default, the icmp packet is blocked by Windows firewall. The IMM GUI will then change to “OS booted” status after you change the setting as indicated above in both the Web and CLI interfaces.

Configuring the Ethernet controller

The Ethernet controllers are integrated on the system board. They provide an interface for connecting to a 10 Mbps, 100 Mbps, or 1 Gbps network and provide full-duplex (FDX) capability, which enables simultaneous transmission and reception of data on the network.

If the Ethernet ports in the server support auto-negotiation, the controllers detect the data-transfer rate (10BASE-T, 100BASE-TX, or 1000BASE-T) and duplex mode (full-duplex or half-duplex) of the network and automatically operate at that rate and mode.

You do not have to set any jumpers or configure the controllers. However, you must install a device driver to enable the operating system to address the controllers.

To find device drivers and information about configuring the Ethernet controllers, go to http://www.lenovo.com/support.

Enabling Features on Demand Ethernet software

You can activate the Features on Demand (FoD) software upgrade key for Fibre Channel over Ethernet (FCoE) and iSCSI storage protocols that are integrated in the integrated management module.

For more information and instructions for activating the Features on Demand Ethernet software key, see the *Features on Demand User's Guide*. To download the document, go to https://fod.lenovo.com/lkms, log in, and click **Help**.

Lenovo ToolsCenter Suite CLI program

The Lenovo ToolsCenter Suite CLI program is a collection of server management tools. Lenovo ToolsCenter Suite CLI also covers the configuration function, which is an alternative to the Setup Utility for modifying UEFI settings.

Lenovo ToolsCenter Suite CLI has the following features:

- Utilizing a command line interface to manage firmware, hardware, and operating systems
- Modifying UEFI settings from the command line without restarting the system to access the Setup Utility
- Configuring the optional remote presence features or other IMM2 settings
- Providing IMM2 LAN over USB interface configuration and issuing setup commands through the command-line interface
- Scripting environments through a batch-processing mode
- Saving any of the settings as a file and running the file as a script

For more information and to download Lenovo ToolsCenter Suite CLI, go to https://support.lenovo.com/us/en/documents/LNVO-CENTER.

Using Lenovo XClarity Administrator

The initial setup of Lenovo XClarity Administrator includes the following:

- Preparing the network
- Installing and configuring the Lenovo XClarity Administrator virtual appliance
- Managing systems
- Setting up automatic problem notification optionally

To manage systems based on the network topology that is implemented in your environment, there are a number of different ways to connect manageable systems to the network and to set up the Lenovo XClarity Administrator. If you plan to use Lenovo XClarity Administrator to manage the server, you must check for the latest applicable Lenovo XClarity Administrator updates. For installing the Lenovo XClarity Administrator in VMware ESXi-based and Hyper-V environments and downloading Lenovo XClarity Administrator updates, go to:
https://support.lenovo.com/us/en/ documents/LNVO-XCLARIT

Lenovo XClarity Administrator offers a free, 90-day trial license that enables you to use all available features (including operating-system deployment, firmware maintenance, and configuration management) for a limited time. To continue using Lenovo XClarity Administrator after the 90-day trial period, you are required to purchase a full-function-enablement license for each Lenovo XClarity Administrator instance. You can purchase and download the license from:
https://support.lenovo.com/us/en/documents/lnvo-lxcaupd

Updating the Universal Unique Identifier (UUID)

The Universal Unique Identifier (UUID) must be updated when the system board is replaced. Use the Lenovo ToolsCenter Suite CLI to update the UUID in the UEFI-based server.

Lenovo ToolsCenter Suite CLI is an online tool that supports several operating systems. Make sure that you download the version for your operating system. You can download Lenovo ToolsCenter Suite CLI from the Web site. To download Lenovo ToolsCenter Suite CLI and update the UUID, complete the following steps:

Note: Changes are made periodically to the Web site. The actual procedure might vary slightly from what is described in this document.

Step 1. Download Lenovo ToolsCenter Suite CLI:

a. Go to http://www.lenovo.com/support.

b. Click the **Downloads** tab at the top of the panel.

c. Under **ToolsCenter**, select **View ToolsCenter downloads**.

d. Select **Lenovo ToolsCenter Suite CLI**.

e. Scroll down, click the link, and download Lenovo ToolsCenter Suite CLI version for your operating system.

Step 2. Lenovo ToolsCenter Suite CLI sets the UUID in the Integrated Management Module (IMM). Select one of the following methods to access the Integrated Management Module (IMM) to set the UUID:

- Online from the target system (LAN or keyboard console style (KCS) access)
- Remote access to the target system (LAN based)
- Bootable media containing Lenovo ToolsCenter Suite CLI (LAN or KCS, depending upon the bootable media)

Step 3. Copy and unpack the Lenovo ToolsCenter Suite CLI package, which also includes other required files, to the server. Make sure that you unpack the Lenovo ToolsCenter Suite CLI and the required files to the same directory.

Step 4. After you install Lenovo ToolsCenter Suite CLI, use the following command syntax to set the UUID:

```
onecli config set SYSTEM_PROD_DATA.SysInfoUUID <uuid_value> [access_method]
```

Where:

<uuid_value>
Up to 16-byte hexadecimal value assigned by you.

[access_method]
The access method that you selected to use from the following methods:

- Online authenticated LAN access, type the command:

  ```
  [--imm imm_user_id:imm_password@imm_internal_ip]
  ```

  Where:

  imm_internal_ip
  The IMM2 internal LAN/USB IP address. The default value is 169.254.95.118.

  imm_user_id
  The IMM2 account (1 of 12 accounts). The default value is USERID.

  imm_password

The IMM2 account password (1 of 12 accounts). The default value is PASSW0RD (with a zero 0 not an O).

Note: If you do not specify any of these parameters, Lenovo ToolsCenter Suite CLI will use the default values. When the default values are used and Lenovo ToolsCenter Suite CLI is unable to access the IMM2 using the online authenticated LAN access method, Lenovo ToolsCenter Suite CLI will automatically use the unauthenticated KCS access method.

Example that does not use the user ID and password default values:

```
onecli config set SYSTEM_PROD_DATA.SYsInfoUUID <uuid_value> --user <user_id>
--password <password>
```

Example that uses the user ID and password default values:

```
onecli config set SYSTEM_PROD_DATA.SysInfoUUID <uuid_value>
```

- Online KCS access (unauthenticated and user restricted):

  You do not need to specify a value for *access_method* when you use this access method.

  Example:

  ```
  onecli config set SYSTEM_PROD_DATA.SysInfoUUID <uuid_value>
  ```

  The KCS access method uses the IPMI/KCS interface. This method requires that the IPMI driver be installed. Some operating systems have the IPMI driver installed by default. Lenovo ToolsCenter Suite CLI provides the corresponding mapping layer. For more details, see the *Lenovo ToolsCenter Suite CLI Users Guide*. To access this guide, do the following:

  1. Go to http://www.lenovo.com/support.
  2. Click the **Downloads** tab at the top of the panel.
  3. Under **ToolsCenter**, select **View ToolsCenter downloads**.
  4. Select **Lenovo ToolsCenter Suite CLI**.
  5. Scroll down and click the link and download Lenovo ToolsCenter Suite CLI version for your operating system. Scroll down and look under **Online Help** to download the *Lenovo ToolsCenter Suite CLI Users Guide*.

- Remote LAN access, type the command:

  Note: When using the remote LAN access method to access IMM2 using the LAN from a client, the *host* and the *imm_external_ip* address are required parameters.

  ```
  [--imm imm_user_id:imm_password@imm_externaln _ip]
  ```

  Where:

  imm_external_ip
  The external IMM2 LAN IP address. There is no default value. This parameter is required.

  imm_user_id
  The IMM2 account (1 of 12 accounts). The default value is USERID.

  imm_password
  The IMM2 account password (1 of 12 accounts). The default value is PASSW0RD (with a zero 0 not an O).

  Example that does not use the user ID and password default values:

  ```
  onecli config set SYSTEM_PROD_DATA.SYsInfoUUID <uuid_value> [--imm imm_user_id:imm_password@imm_internal_ip]
  ```

  Example that does use the user ID and password default values:

  ```
  onecli config set SYSTEM_PROD_DATA.SysInfoUUID <uuid_value>
  ```

- Bootable media:

You can also build a bootable medium using the applications available through the ToolsCenter Web site at https://support.lenovo.com/us/en/ documents/LNVO-CENTER. From the **ToolsCenter** page, scroll down for the available tools.

Step 5. Restart the server.

Updating the DMI/SMBIOS data

The Desktop Management Interface (DMI) must be updated when the system board is replaced. Use the Advanced Settings Utility to update the DMI in the UEFI-based server.

The Desktop Management Interface (DMI) must be updated when the system board is replaced. Use Lenovo ToolsCenter Suite CLI to update the DMI in the UEFI-based server. Lenovo ToolsCenter Suite CLI is an online tool that supports several operating systems. Make sure that you download the version for your operating system. You can download Lenovo ToolsCenter Suite CLI from the Lenovo Web site. To download Lenovo ToolsCenter Suite CLI and update the DMI, do the following:

Note: Changes are made periodically to the Lenovo Web site. The actual procedure might vary slightly from what is described in this document.

Step 1. Go to https://support.lenovo.com/us/en/documents/LNVO-TCLI. Then, find and download Lenovo ToolsCenter Suite CLI version for your operating system.

Step 2. Lenovo ToolsCenter Suite CLI sets the DMI in the Integrated Management Module 2.1 (IMM2.1). Select one of the following methods to access the Integrated Management Module 2.1 (IMM2.1) to set the DMI:

- Online from the target system, such as LAN or keyboard console style (KCS) access
- Remote access to the target system (LAN based)
- Bootable medium containing Lenovo ToolsCenter Suite CLI (LAN or KCS, depending upon the bootable media)

Step 3. Copy and unpack the Lenovo ToolsCenter Suite CLI package, which also includes other required files, to the server. Make sure that you unpack the Lenovo ToolsCenter Suite CLI and the required files to the same directory. In addition to the application executable (OneCLI or OneCLI64), the following files are required:

- For Windows based operating systems:
  - *ibm_rndis_server_os.inf*
  - *device.cat*
- For Linux based operating systems:
  - *cdc_interface.sh*

Step 4. After you install Lenovo ToolsCenter Suite CLI, type the following commands to set the DMI:

```
onecli config set SYSTEM_PROD_DATA.SysInfoProdName <m/t_model> [access_method]
onecli config set SYSTEM_PROD_DATA.SysInfoSerialNum <s/n> [access_method]
onecli config set SYSTEM_PROD_DATA.SysEncloseAssetTag <asset_tag> [access_method]
```

Where:

<m/t_model>
The server machine type and model number. Type `mtm xxxxyyy`, where *xxxx* is the machine type (8693) and *yyy* is the server model number.

<s/n>
The serial number on the server. Type `sn zzzzzzz`, where *zzzzzzz* is the serial number.

<asset_method>

The server asset tag number. Type `asset aaaaaaaaaaaaaaaaaaaaaaaaaaaaaaaa`, where *aaaaaaaaaaaaaaaaaaaaaaaaaaaaaaaa* is the asset tag number.

[access_method]
The access method that you select to use from the following methods:

- Online authenticated LAN access, type the command: `[--imm imm_user_id:imm_password@imm_internal_ip]`

  Where:

  imm_internal_ip
  The IMM2 internal LAN/USB IP address. The default value is 169.254.95.118.

  imm_user_id
  The IMM2 account (1 of 12 accounts). The default value is USERID.

  imm_password
  The IMM2 account password (1 of 12 accounts). The default value is PASSW0RD (with a zero 0 not an O).

  Note: If you do not specify any of these parameters, Lenovo ToolsCenter Suite CLI will use the default values. When the default values are used and Lenovo ToolsCenter Suite CLI is unable to access the IMM2 using the online authenticated LAN access method, Lenovo ToolsCenter Suite CLI will automatically use the unauthenticated KCS access method.

  Examples that do use the user ID and password default values:
  ```
  onecli config set SYSTEM_PROD_DATA.SysInfoProdName <m/t_model>
  onecli config set SYSTEM_PROD_DATA.SysInfoSerialNum <s/n>
  onecli config set SYSTEM_PROD_DATA.SysEncloseAssetTag <asset_tag>
  ```

- Online KCS access (unauthenticated and user restricted): You do not need to specify a value for *access_method* when you use this access method.

  The KCS access method uses the IPMI/KCS interface. This method requires that the IPMI driver be installed. Some operating systems have the IPMI driver installed by default. Lenovo ToolsCenter Suite CLI provides the corresponding mapping layer. To download the *Lenovo ToolsCenter Suite CLI Users Guide*, do the following:

  1. Go to http://www.lenovo.com/support.
  2. Click **Downloads** tab at the top of the panel.
  3. Under **ToolsCenter**, select **View ToolsCenter downloads**.
  4. Select **Lenovo ToolsCenter Suite CLI**.
  5. Scroll down and click the link and download Lenovo ToolsCenter Suite CLI version for your operating system. Scroll down and look under **Online Help** to download the *Lenovo ToolsCenter Suite CLI Users Guide*.

  The following commands are examples of not using the user ID and password default values:
  ```
  onecli config set SYSTEM_PROD_DATA.SysInfoProdName <m/t_model>
  onecli config set SYSTEM_PROD_DATA.SysInfoSerialNum <s/n>
  onecli config set SYSTEM_PROD_DATA.SysEncloseAssetTag <asset_tag>
  ```

- Remote LAN access, type the command:

  Note: When using the remote LAN access method to access IMM2 using the LAN from a client, the *host* and the *imm_external_ip* address are required parameters.

  ```
  [--imm imm_user_id:imm_password@imm_external_ip]
  ```

  Where:

imm_external_ip
The external IMM2 LAN IP address. There is no default value. This parameter is required.

imm_user_id
The IMM2 account (1 of 12 accounts). The default value is USERID.

imm_password
The IMM2 account password (1 of 12 accounts). The default value is PASSW0RD (with a zero 0 not an O).

Examples that do use the user ID and password default values:

```
onecli config set SYSTEM_PROD_DATA.SysInfoProdName <m/t_model> --host <imm_ip>
onecli config set SYSTEM_PROD_DATA.SysInfoSerialNum <s/n> --host <imm_ip>
onecli config set SYSTEM_PROD_DATA.SysEncloseAssetTag <asset_tag> --host <imm_ip>
```

- Bootable media:

  You can also build a bootable medium using the applications available through the ToolsCenter Web site at https://support.lenovo.com/us/en/ documents/LNVO-CENTER. From the **ToolsCenter** page, scroll down for the available tools.

Step 5. Update the appliance name. See "Update the appliance name" on page 45.

Step 6. Enable the legacy boot mode. See "Legacy boot mode" on page 45.

Step 7. Configure the BIOS optimization settings. See "BIOS optimization settings" on page 46.

Step 8. Modify boot options. See "Modify boot options" on page 46.

Step 9. Restart the server.

Configuring the HX Series appliance

This section contains configuration procedures that are used in one or more of the hardware replacement procedures described in Chapter 5 "Removing and replacing components" on page 101.

Update the appliance name

The DMI/SMBIOS string for the Lenovo Converged HX Series appliance is the same as the appliance name.

Table 5. Appliance name and the corresponding VPD string

Appliance Name	VPD String
Lenovo Converged HX1310	Lenovo Converged HX1310
Lenovo Converged HX2310-E	Lenovo Converged HX2310-E
Lenovo Converged HX3310	Lenovo Converged HX3310
Lenovo Converged HX3310-F	Lenovo Converged HX3310-F

The DMI/SMBIOS string can be updated using the OneCLI system tool as follows:

```
onecli config set SYSTEM_PROD_DATA.SysInfoProdIdentifier "Lenovo Converged HX1310"
onecli config set SYSTEM_PROD_DATA.SysInfoProdIdentifierEx "Lenovo Converged HX1310:" --override
```

Legacy boot mode

The Lenovo ToolsCenter Suite CLI program, or other means should be used to enable if not already enabled.

```
onecli config set BootModes.SystemBootMode "Legacy Mode"
```

BIOS optimization settings

Lenovo recommends the following BIOS optimization settings to be used with the Lenovo Converged HX Series appliances.

Direct cache access (DCA)

You should enable DCA mode for the processors to allow the network adapters to place data directly into the CPU cache which reduces cache misses and can improve performance.

Use the Lenovo ToolsCenter Suite CLI program or other means to enable the DCA processor option:

```
onecli config set Processors.DCA Enable
```

Operating mode

You should change the operating mode from the default mode to **Custom Mode**. This permits other settings to be changed such as the power performance bias.

Use the Lenovo ToolsCenter Suite CLI program or other means to set the operating mode:

```
onecli config set OperatingModes.ChooseOperatingMode “Custom Mode”
```

Power performance bias

This option allows the OS (hypervisor) to control the node power. Many customers prefer this setting as it saves on OPEX.

Use the Lenovo ToolsCenter Suite CLI program or other means to set the power performance bias to “OS Controlled”:

```
onecli config set Power.PowerPerformanceBias “OS Controlled”
```

Modify boot options

Use the Lenovo ToolsCenter Suite CLI program or other means to configure the boot order as follows:

1. CD/DVD Rom
2. Hard Disk 0
3. PXE Network

```
onecli config set BootOrder.BootOrder ”Legacy Only=CD/DVD Rom=Hard Disk 0=PXE Network”
```

Chapter 3. Troubleshooting

This section describes the diagnostic tools and troubleshooting information that are available to help you solve hardware problems that might occur in the server.

See also the Nutanix software documentation at:
https://portal.nutanix.com/#/page/docs

If you cannot diagnose and correct a problem by using the information in this chapter, see Appendix D "Getting help and technical assistance" on page 885 for more information.

Start here

You can solve many problems without outside assistance by following the troubleshooting procedures in this documentation and on the World Wide Web.

This document describes the diagnostic tests that you can perform, troubleshooting procedures, and explanations of error messages and error codes. The documentation that comes with your operating system and software also contains troubleshooting information.

Diagnosing a problem

Before you contact Lenovo or an approved warranty service provider, follow these procedures in the order in which they are presented to diagnose a problem with your server.

Step 1. **Return the server to the condition it was in before the problem occurred.**

If any hardware, software, or firmware was changed before the problem occurred, if possible, reverse those changes. This might include any of the following items:

- Hardware components
- Device drivers and firmware
- System software
- UEFI firmware
- System input power or network connections

Step 2. **View the light path diagnostics LEDs and event logs.**

The server is designed for ease of diagnosis of hardware and software problems.

- **Light path diagnostics LEDs:** See "Light path diagnostics" on page 53 for information about using light path diagnostics LEDs.
- **Event logs:** See "Event logs" on page 57 for information about notification events and diagnosis.
- **Software or operating-system error codes:** See the documentation for the software or operating system for information about a specific error code. See the manufacturer's Web site for documentation.

Step 3. **Run Dynamic System Analysis (DSA) and collect system data.**

Run Dynamic System Analysis (DSA) to collect information about the hardware, firmware, software, and operating system. Have this information available when you contact Lenovo or an approved

© Copyright Lenovo 2016, 2023

warranty service provider. For instructions for running DSA, see the *Dynamic System Analysis Installation and User's Guide*.

To download the latest version of DSA code and the *Dynamic System Analysis Installation and User's Guide*, go to https://support.lenovo.com/us/ en/documents/LNVO-DSA.

Step 4. **Check for and apply code updates.**

Fixes or workarounds for many problems might be available in updated UEFI firmware, device firmware, or device drivers. To display a list of available updates for the server, go to http://www.ibm.com/support/ fixcentral.

Attention: Installing the wrong firmware or device-driver update might cause the server to malfunction. Before you install a firmware or device-driver update, read any readme and change history files that are provided with the downloaded update. These files contain important information about the update and the procedure for installing the update, including any special procedure for updating from an early firmware or device-driver version to the latest version.

Important: Some cluster solutions require specific code levels or coordinated code updates. If the device is part of a cluster solution, verify that the latest level of code is supported for the cluster solution before you update the code.

a. **Install UpdateXpress system updates.**

You can install code updates that are packaged as an UpdateXpress System Pack or UpdateXpress CD image. An UpdateXpress System Pack contains an integration-tested bundle of online firmware and device-driver updates for your server. In addition, you can use ToolsCenter Bootable Media Creator to create bootable media that is suitable for applying firmware updates and running preboot diagnostics. For more information about UpdateXpress System Packs, see http://www.ibm.com/support/entry/ portal/docdisplay?lndocid=SERV-XPRESS and "Updating the firmware" on page 29. For more information about the Bootable Media Creator, see https://support.lenovo.com/ us/en/documents/LNVO-BOMC.

Be sure to separately install any listed critical updates that have release dates that are later than the release date of the UpdateXpress System Pack or UpdateXpress image (see step b).

b. **Install manual system updates.**

1. **Determine the existing code levels.**

   In DSA, click **Firmware/VPD** to view system firmware levels, or click **Software** to view operating-system levels.

2. **Download and install updates of code that is not at the latest level.**

   To display a list of available updates for the server, go to http://www.ibm.com/support/ fixcentral.

   When you click an update, an information page is displayed, including a list of the problems that the update fixes. Review this list for your specific problem; however, even if your problem is not listed, installing the update might solve the problem.

Step 5. **Check for and correct an incorrect configuration.**

If the server is incorrectly configured, a system function can fail to work when you enable it; if you make an incorrect change to the server configuration, a system function that has been enabled can stop working.

a. **Make sure that all installed hardware and software are supported.**

See http://www.lenovo.com/ serverproven/ to verify that the server supports the installed operating system, optional devices, and software levels. If any hardware or software component is not supported, uninstall it to determine whether it is causing the problem. You must remove nonsupported hardware before you contact Lenovo or an approved warranty service provider for support.

b. **Make sure that the server, operating system, and software are installed and configured correctly.**

Many configuration problems are caused by loose power or signal cables or incorrectly seated adapters. You might be able to solve the problem by turning off the server, reconnecting cables, reseating adapters, and turning the server back on. For information about performing the checkout procedure, see "About the checkout procedure" on page 50. For information about configuring the server, see Chapter 2 "Configuring" on page 29.

Step 6. **See controller and management software documentation.**

If the problem is associated with a specific function (for example, if a RAID hard disk drive is marked offline in the RAID array), see the documentation for the associated controller and management or controlling software to verify that the controller is correctly configured.

Problem determination information is available for many devices such as RAID and network adapters.

For problems with operating systems or Lenovo software or devices, go to http://www.lenovo.com/ support.

Step 7. **Check for troubleshooting procedures and RETAIN tips.**

Troubleshooting procedures and RETAIN tips document known problems and suggested solutions. To search for troubleshooting procedures and RETAIN tips, go to http://www.lenovo.com/support.

Step 8. **Use the troubleshooting tables.**

See "Troubleshooting by symptom" on page 63 to find a solution to a problem that has identifiable symptoms.

A single problem might cause multiple symptoms. Follow the troubleshooting procedure for the most obvious symptom. If that procedure does not diagnose the problem, use the procedure for another symptom, if possible.

If the problem remains, contact Lenovo or an approved warranty service provider for assistance with additional problem determination and possible hardware replacement. To open an online service request, go to http://www.ibm.com/support/ entry/portal/Open_service_request. Be prepared to provide information about any error codes and collected data.

Undocumented problems

If you have completed the diagnostic procedure and the problem remains, the problem might not have been previously identified by Lenovo. After you have verified that all code is at the latest level, all hardware and software configurations are valid, and no light path diagnostics LEDs or log entries indicate a hardware component failure, contact Lenovo or an approved warranty service provider for assistance.

To open an online service request, go to http://www.ibm.com/support/ entry/portal/Open_service_request. Be prepared to provide information about any error codes and collected data and the problem determination procedures that you have used.

Service bulletins

Lenovo continually updates the support Web site with the latest tips and techniques that you can use to solve problem that you might have with the Lenovo Converged HX Series server.

To find service bulletins that are available for the Lenovo Converged HX Series server, go to http://www.lenovo.com/support and search for `Type 8693`, and `retain`.

See also Nutanix Knowledge Base articles on the Nutanix Support Page: http://www.nutanix.com/support

Checkout procedure

The checkout procedure is the sequence of tasks that you should follow to diagnose a problem in the server.

About the checkout procedure

Review the following information before you perform the checkout procedure for diagnosing hardware problems.

- Read the safety information that begins on "Safety" on page v.
- The Dynamic System Analysis (DSA) provides the primary methods of testing the major components of the server, such as the system board, Ethernet controller, keyboard, mouse (pointing device), serial ports, and hard disk drives. You can also use them to test some external devices. If you are not sure whether a problem is caused by the hardware or by the software, you can use the diagnostic programs to confirm that the hardware is working correctly.
- When you run DSA, a single problem might cause more than one error message. When this happens, correct the cause of the first error message. The other error messages usually will not occur the next time you run DSA.

  Important: If multiple error codes or light path diagnostics LEDs indicate a microprocessor error, the error might be in the microprocessor or in the microprocessor socket. See "Microprocessor problems" on page 70 for information about diagnosing microprocessor problems.
- Before you run DSA, you must determine whether the failing server is part of a shared hard disk drive cluster (two or more servers sharing external storage devices). If it is part of a cluster, you can run all diagnostic programs except the ones that test the storage unit (that is, a hard disk drive in the storage unit) or the storage adapter that is attached to the storage unit. The failing server might be part of a cluster if any of the following conditions is true:
  - You have identified the failing server as part of a cluster (two or more servers sharing external storage devices).
  - One or more external storage units are attached to the failing server and at least one of the attached storage units is also attached to another server or unidentifiable device.
  - One or more servers are located near the failing server.

  Important: If the server is part of a shared hard disk drive cluster, run one test at a time. Do not run any suite of tests, such as "quick" or "normal" tests, because this might enable the hard disk drive diagnostic tests.
- If the server is halted and a POST error code is displayed, see Appendix B "UEFI/POST diagnostic codes" on page 753. If the server is halted and no error message is displayed, see "Troubleshooting by symptom" on page 63 and "Solving undetermined problems" on page 83.
- For information about power-supply problems, see "Solving power problems" on page 81, "Power problems" on page 73, and "Power-supply LEDs" on page 54.

- For intermittent problems, check the event log; see “Event logs” on page 57 and Appendix C “DSA diagnostic test results” on page 775.

Performing the checkout procedure

Use this information to perform the checkout procedure.

To perform the checkout procedure, complete the following steps:

Step 1. Is the server part of a cluster?

- **No:** Go to Step 2.
- **Yes:** Shut down all failing servers that are related to the cluster. Go to Step 2.

Step 2. Complete the following steps:

a. Check the power supply LEDs (see “Power-supply LEDs” on page 54).

b. Turn off the server and all external devices.

c. Check all internal and external devices for compatibility at http://www.lenovo.com/serverproven/.

d. Check all cables and power cords.

e. Set all display controls to the middle positions.

f. Turn on all external devices.

g. Turn on the server. If the server does not start, see “Troubleshooting by symptom” on page 63.

h. Check the system-error LED on the operator information panel or LCD operating panel assembly (see “Operator information panel” on page 15 or “LCD operating panel assembly” on page 15).

i. Check for the following results:

- Successful completion of POST (see “POST” on page 60 for more information)
- Successful completion of startup, which is indicated by a readable display of the operating-system desktop

Step 3. Is there a readable image on the monitor screen?

- **No:** Find the failure symptom in “Troubleshooting by symptom” on page 63; if necessary, see “Solving undetermined problems” on page 83.
- **Yes:** Run DSA (see “Running the DSA Preboot diagnostic programs” on page 61).
  - If DSA reports an error, follow the instructions in Appendix C “DSA diagnostic test results” on page 775.
  - If DSA does not report an error but you still suspect a problem, see “Solving undetermined problems” on page 83.

Diagnostic tools

The section introduces available tools to help you diagnose and solve hardware-related problems.

- **Light path diagnostics**

  Use light path diagnostics to diagnose system errors quickly. See “Light path diagnostics” on page 53 for more information.

- **Event logs**

The event logs list the error codes and messages that are generated when an error is detected for the subsystems IMM2.1, POST, DSA, and the server baseboard management controller. See "Event logs" on page 57 for more information.

- **Integrated management module II**

  The integrated management module 2.1 (IMM2.1) combines service processor functions, video controller, and remote presence and blue-screen capture features in a single chip. The IMM provides advanced service-processor control, monitoring, and alerting function. If an environmental condition exceeds a threshold or if a system component fails, the IMM lights LEDs to help you diagnose the problem, records the error in the IMM event log, and alerts you to the problem. Optionally, the IMM also provides a virtual presence capability for remote server management capabilities. The IMM provides remote server management through the following industry-standard interfaces:

  - Intelligent Platform Management Protocol (IPMI) version 2.0
  - Simple Network Management Protocol (SNMP) version 3
  - Common Information Model (CIM)
  - Web browser

  For more information about the integrated management module 2.1 (IMM2.1), see "Using the integrated management module" on page 36, Appendix A "Integrated management module 2.1 (IMM2.1) error messages" on page 183, and the *Integrated Management Module II User's Guide* at https://pubs.lenovo.com/imm2/product_page.html.

- **Dynamic System Analysis**

  DSA Preboot

  DSA Preboot diagnostic program is stored in the integrated USB memory on the server. DSA Preboot collects and analyzes system information to aid in diagnosing server problems, as well as offering a rich set of diagnostic tests of the major components of the server. DSA Preboot collects the following information about the server:

  - Drive health information
  - Event logs for service processors
  - IMM2.1 configuration information
  - IMM2.1 environmental information
  - Installed hardware, including PCI and USB information
  - Light path diagnostics status
  - Microprocessor, input/output hub, and UEFI error logs
  - Network interfaces and settings
  - Option card driver and firmware information
  - RAID controller configuration
  - Service processor (integrated management module) status and configuration
  - System configuration
  - Vital product data, firmware, and UEFI configuration

  DSA Preboot also provides diagnostics for the following system components (when they are installed):

  1. Emulex network adapter
  2. IMM I2C bus
  3. Memory modules
  4. Microprocessors

5. SAS or SATA drives
6. LSI controller
7. Broadcom network adapter
8. FusionIO storage
9. Intel GPU
10. Nvidia GPU

See "Running the DSA Preboot diagnostic programs" on page 61 for more information on running the DSA Preboot program on the server.

- **Troubleshooting by symptom**

  These tables list problem symptoms and actions to correct the problems. See "Troubleshooting by symptom" on page 63 for more information.

Light path diagnostics

Light path diagnostics is a system of LEDs on various external and internal components of the server that leads you to the failed component. When an error occurs, LEDs are lit on the operator information panel on the front of the server, then on the failed component. By viewing the LEDs in a particular order, you can often identify the source of the error.

When LEDs are lit to indicate an error, they remain lit when the server is turned off, provided that the server is still connected to power and the power supply is operating correctly.

Before you work inside the server to view light path diagnostics LEDs, read the safety information "Safety" on page v and "Handling static-sensitive devices" on page 110.

If an error occurs, proceed as follows:

1. Look at the operator information panel (see "Operator information panel" on page 15) on the front of the server.
   - If the check log LED is lit, it indicates that information about an un-isolated fault condition in the server is available in the IMM event log or in the system-event log.
   - If the system-error LED is lit, it indicates that an error has occurred.
2. Remove the server cover and look inside the server for lit LEDs. Certain components inside the server have LEDs that are lit to indicate the location of a problem. The system service label inside the server cover provides an overview of internal components that correspond to errors indicated by the operator information panel or LCD operating panel assembly (see "Operator information panel" on page 15 or "LCD operating panel assembly" on page 15. This information can often provide enough information to diagnose the error.

   Note: You do not have to remove the server cover to view the LEDs on hard disk drives and power supplies.

The following illustration shows the LEDs on the system board.

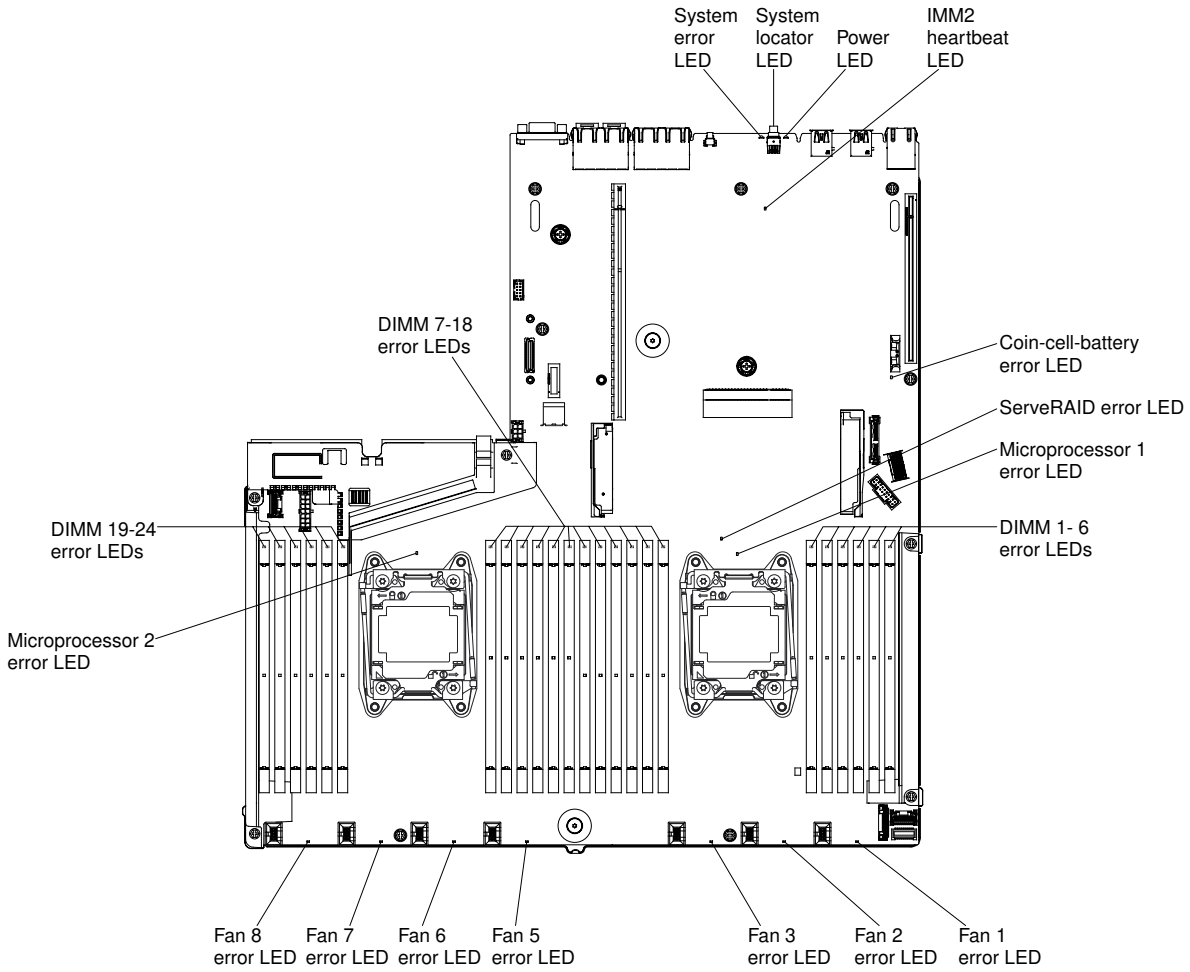

Figure 18. System board error LEDs

The LCD operating panel assembly displays a current list of errors reported by the system and other information. See the "LCD operating panel assembly" on page 15 for more information about the LCD operating panel assembly.

Power-supply LEDs

Use this information to view power-supply LEDs.

The following minimum configuration is required for the server to start:

- One microprocessor in the microprocessor socket 1
- 64 GB of memory modules installed
- One power supply
- Power cord
- Five fans

ac power-supply LEDs

Use this information to view ac power-supply LEDs.

The following minimum configuration is required for the dc LED on the power supply to be lit:

- Power supply
- Power cord

Note: You must turn on the server for the dc LED on the power supply to be lit.

The following illustration shows the locations of the power-supply LEDs on the ac power supply.

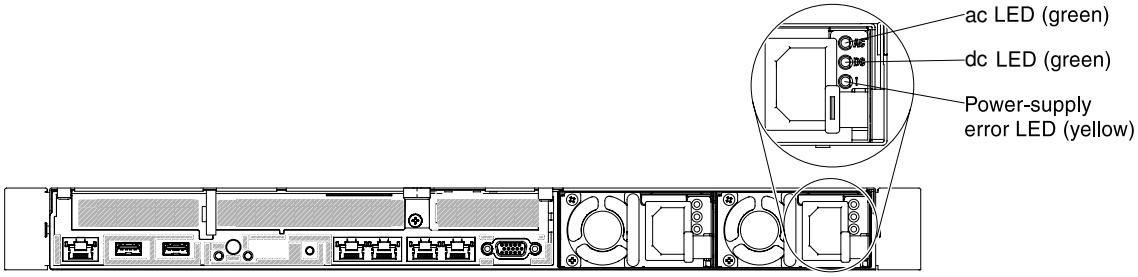

Figure 19. ac power-supply LEDs

The following table describes the problems that are indicated by various combinations of the power-supply LEDs on an ac power supply and suggested actions to correct the detected problems.

ac power-supply LEDs			Description	Action	Notes
ac	**dc**	**Error (!)**			
On	On / Blinking	Off	Normal operation.		
On	Blinking	Off	Zero Output mode		The zero output mode is used to configure the power supply behavior as standard redundant mode or zero-output mode by the host system. When the power supply is configured to this mode, minimal power consumption is maintained. At the same time, the power supply will keep its fan rotating, and the PSU LED should blink at a rate of 1 Hz.
Off	Off	Off	No ac power to the server or a problem with the ac power source.	1. Make sure that the ac power source meets the minimum voltage requirement for the installed power supplies. 2. Make sure that the power cord is connected to a functioning power source. 3. Restart the server. If the error remains, check the power-supply LEDs. 4. If the problem remains, replace the power supply.	This is a normal condition when no ac power is present.
Off	Off	On	The power supply has failed.	Replace the power supply.	

ac power-supply LEDs			Description	Action	Notes
ac	dc	Error (!)			
Off	On / Blinking	Off	The power supply has failed.	Replace the power supply.	
Off	On / Blinking	On	The power supply has failed.	Replace the power supply.	
On	Off	Off	Power supply not fully seated, faulty system board, or the power supply has failed.	1. Reseat the power supply. 2. Use the Power Configurator utility to ensure that current system power consumption is under limitation. For more information and to download the utility, go to http://www-03.ibm.com/ systems/ bladecenter/ resources/ powerconfig.html.	Typically indicates a power-supply is not fully seated.
On	Off	On	The power supply has failed.	Replace the power supply.	
On	On / Blinking	On	The power supply has failed.	Replace the power supply.	

Note: When the dc LED is blinking at a 1 Hz rate, the PSU is at STANDBY mode. That is, no dc power output is from this PSU.

System pulse LEDs

Use this information to diagnose possible errors that are indicated by the system pulse LEDs.

The following LEDs are on the system board and help you to monitor the system power-on and power-off sequencing and boot progress (see "System-board LEDs" on page 24 for the location of these LEDs).

Table 6. System pulse LEDs

LED	Description	Action
FPGA heartbeat	Power-on and power-off sequencing	1. If the LED blinks at 1 Hz, it is functioning properly and no action is necessary. 2. If the LED is not blinking, (trained technician only) replace the system board.
IMM heartbeat	IMM2.1 heartbeat boot process	The following steps describe the different stages of the IMM2.1 heartbeat sequencing process. 1. When this LED is blinking fast (approximately 4 Hz), this indicates that the IMM2.1 code is in the loading process. 2. When this LED goes off momentarily, this indicates that the IMM2.1 code has loaded completely. 3. When this LED goes off momentarily and then starts blinking slowing (approximately 1 Hz), this indicates that IMM2.1 is fully operational. You can now press the power-control button to power on the server. 4. If this LED does not blink within 30 seconds of connecting a power source to the server, (trained technician only) replace the system board.

PCI riser-card LEDs

Use this information to view PCI riser-card LEDs.

The following illustration shows the location of the PCI riser-card LEDs.

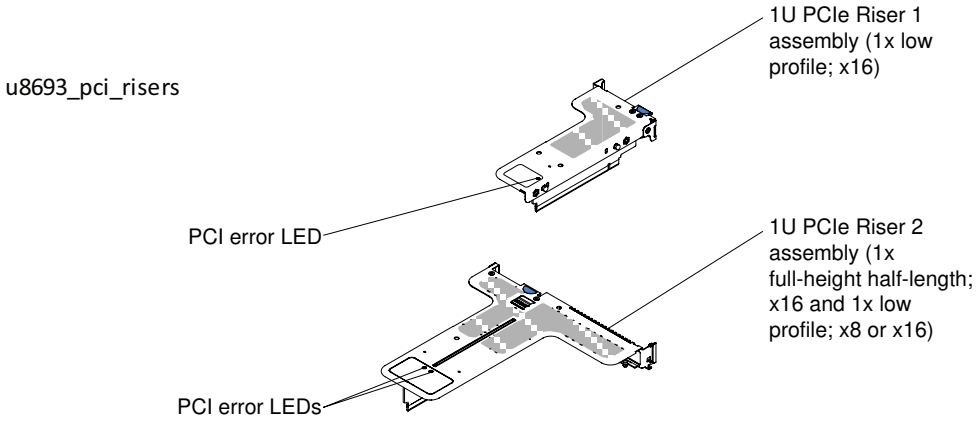

Figure 20. PCI riser-card LEDs

Event logs

Error codes and messages displayed in POST event log, system-event log, integrated management module (IMM2.1) event log, and DSA event log.

- **POST event log:** This log contains the most recent error codes and messages that were generated during POST. You can view the contents of the POST event log from the Setup Utility (see "Starting the Setup Utility" on page 31). For more information about POST error codes, see Appendix B "UEFI/POST diagnostic codes" on page 753.
- **System-event log:** This log contains POST and system management interrupt (SMI) events and all events that are generated by the baseboard management controller that is embedded in the integrated management module (IMM). You can view the contents of the system-event log through the Setup Utility and through the Dynamic System Analysis (DSA) program (as IPMI event log).

  The system-event log is limited in size. When it is full, new entries will not overwrite existing entries; therefore, you must periodically clear the system-event log through the Setup Utility. When you are troubleshooting an error, you might have to save and then clear the system-event log to make the most recent events available for analysis. For more information about the system-event log, see Appendix A "Integrated management module 2.1 (IMM2.1) error messages" on page 183.

  Messages are listed on the left side of the screen, and details about the selected message are displayed on the right side of the screen. To move from one entry to the next, use the Up Arrow (↑) and Down Arrow (↓) keys.

  Some IMM sensors cause assertion events to be logged when their setpoints are reached. When a setpoint condition no longer exists, a corresponding deassertion event is logged. However, not all events are assertion-type events.
- **Integrated management module 2.1 (IMM2.1.1) event log:** This log contains a filtered subset of all IMM, POST, and system management interrupt (SMI) events. You can view the IMM event log through the IMM Web interface. For more information, see "Logging on to the Web interface" on page 39. You can also view the IMM event log through the Dynamic System Analysis (DSA) program (as the ASM event log). For more information about IMM error messages, see Appendix A "Integrated management module 2.1 (IMM2.1) error messages" on page 183.
- **DSA event log:** This log is generated by the Dynamic System Analysis (DSA) program, and it is a chronologically ordered merge of the system-event log (as the IPMI event log), the IMM2 chassis event log (as the ASM event log), and the operating-system event logs. You can view the DSA event log through the DSA program (see "Viewing event logs without restarting the server" on page 58). For more information about DSA and DSA messages, see "Dynamic System Analysis" on page 60 and Appendix C "DSA diagnostic test results" on page 775.

Viewing event logs through the Setup Utility

Use this information to view event logs through the Setup Utility.

To view the POST event log or system-event log, complete the following steps:

Step 1. Turn on the server.

Step 2. When the prompt `<F1> Setup` is displayed, press `F1`. If you have set both a power-on password and an administrator password, you must type the administrator password to view the event logs.

Step 3. Select **System Event Logs** and use one of the following procedures:

- To view the POST event log, select **POST Event Viewers**.
- To view the system-event log, select **System Event Log**.

Viewing event logs without restarting the server

If the server is not hung and the IMM is connected to a network, methods are available for you to view one or more event logs without having to restart the server.

If you have installed Lenovo ToolsCenter Suite CLI, you can use it to view the system-event log (as the IPMI event log), or the IMM2 chassis event log (as the ASM event log), the operating-system event logs, or the

merged Lenovo ToolsCenter Suite CLI log. You can also use DSA Preboot to view these logs, although you must restart the server. To install Lenovo ToolsCenter Suite CLI or check for and download a later version of Lenovo ToolsCenter Suite CLI image, go to https://support.lenovo.com/us/en/documents/LNVO-CENTER.

If IPMItool is installed in the server, you can use it to view the system-event log. Most recent versions of the Linux operating system come with a current version of IPMItool. For an overview of IPMI, go to http://www.ibm.com/developerworks/linux/blueprints/ and click **Using Intelligent Platform Management Interface (IPMI) on Linux platforms**.

You can view the IMM2 event log through the **Event Log** link in the integrated management module II (IMM2.1) Web interface. For more information, see "Logging on to the Web interface" on page 39.

The following table describes the methods that you can use to view the event logs, depending on the condition of the server. The first three conditions generally do not require that you restart the server.

Table 7. Methods for viewing event logs

Condition	Action
The server is not hung and is connected to a network (using an operating system controlled network ports).	Use any of the following methods: • Run Lenovo ToolsCenter Suite CLI to view the diagnostic event log (requires IPMI driver) or create an output file that you can send to Lenovo service and support (using ftp or local copy). • Use IPMItool to view the system-event log (requires IPMI driver). • Use the Web browser interface to the IMM to view the system-event log locally (requires RNDIS USB LAN driver).
The server is not hung and is not connected to a network (using an operating system controlled network ports).	• Run Lenovo ToolsCenter Suite CLI to view the diagnostic event log (requires IPMI driver) or create an output file that you can send to Lenovo service and support (using ftp or local copy). • Use IPMItool to view the system-event log (requires IPMI driver). • Use the Web browser interface to the IMM to view the system-event log locally (requires RNDIS USB LAN driver).
The server is not hung and the integrated management module II (IMM2.1) is connected to a network.	In a Web browser, type the IP address for the IMM2.1 and go to the **Event Log** page. For more information, see "Obtaining the IMM host name" on page 38 and "Logging on to the Web interface" on page 39.
The server is hung, and no communication can be made with the IMM.	• If DSA Preboot is installed, restart the server and press `F2` to start DSA Preboot and view the event logs (see "Running the DSA Preboot diagnostic programs" on page 61 for more information). • Alternatively, you can restart the server and press `F1` to start the Setup Utility and view the POST event log or system-event log. For more information, see "Viewing event logs through the Setup Utility" on page 58.

Clearing the event logs

Use this information to clear the event logs.

To clear the event logs, complete the following steps:

Note: The POST error log is automatically cleared each time the server is restarted.

Step 1. Turn on the server.

Step 2. When the prompt `<F1> Setup` is displayed, press F1. If you have set both a power-on password and an administrator password, you must type the administrator password to view the event logs.

Step 3. To clear the IMM system-event log, select **System Event Logs → Clear System Event Log**, then, press Enter twice.

POST

When you turn on the server, it performs a series of tests to check the operation of the server components and some optional devices in the server. This series of tests is called the power-on self-test, or POST.

Note: This server does not use beep codes for server status.

If a power-on password is set, you must type the password and press Enter (when you are prompted), for POST to run.

If POST detects a problem, an error message is displayed. See Appendix B "UEFI/POST diagnostic codes" on page 753 for more information.

If POST detects a problem, an error message is sent to the POST event log, see "Event logs" on page 57 for more information.

Dynamic System Analysis

Dynamic System Analysis (DSA) collects and analyzes system information to aid in diagnosing server problems.

DSA collects the following information about the server:

- Drive health information
- Event logs for service processors
- Hardware inventory, including PCI and USB information
- Light path diagnostics status
- Network interfaces and settings
- Performance data and details about processes that are running
- RAID controller configuration
- Service processor (integrated management module) status and configuration
- System configuration
- Vital product data and firmware information
- IMM configuration information
- IMM environmental information
- Option card driver and firmware information

For system-specific information about the action that you should take as a result of a message that DSA generates, see Appendix C "DSA diagnostic test results" on page 775.

If you cannot find a problem by using DSA, see "Solving undetermined problems" on page 83 for information about testing the server.

Note: DSA Preboot might appear to be unresponsive when you start the program. This is normal operation while the program loads.

Make sure that the server has the latest version of the DSA code. To obtain DSA code and the *Dynamic System Analysis Installation and User's Guide*, go to https://support.lenovo.com/us/ en/documents/LNVO-DSA.

DSA edition

DSA Preboot runs outside of the operating system; you must restart the server to run it. It is provided in the flash memory on the server, or you can create a bootable media such as ISO, USB, or PXE using the ToolsCenter Bootable Media Creator (BoMC). For more details, see the BoMC *User Guide* at https://support.lenovo.com/ us/en/documents/LNVO-BOMC. In addition to the capabilities of the other editions of DSA, DSA Preboot includes diagnostic routines that would be disruptive to run within the operating-system environment (such as resetting devices and causing loss of network connectivity). It has a graphical user interface that you can use to specify which diagnostics to run and to view the diagnostic and data collection results.

DSA Preboot provides diagnostics for the following system components, if they are installed:

- Emulex network adapter
- Tape drives (SCSI, SAS, or SATA)
- Memory
- Microprocessor
- Checkpoint panel
- I2C bus
- SAS and SATA drives
- LSI controller
- Broadcom network adapter
- FusionIO adapter
- Intel GPU
- Nvidia GPU

If you are unable to restart the server or if you need comprehensive diagnostics, use DSA Preboot.

For more information and to download the utilities, go to https://support.lenovo.com/us/ en/documents/LNVO-DSA.

Running the DSA Preboot diagnostic programs

Use this information to run the DSA Preboot diagnostic programs.

Note: The DSA memory test might take up to 30 minutes to run. If the problem is not a memory problem, skip the memory test.

To run the DSA Preboot diagnostic programs, complete the following steps:

Step 1. If the server is running, turn off the server and all attached devices.

Step 2. Turn on all attached devices; then, turn on the server.

Step 3. When the prompt `<F2> Diagnostics` is displayed, press F2.

Note: The DSA Preboot diagnostic program might appear to be unresponsive for an unusual length of time when you start the program. This is normal operation while the program loads. The loading process may take up to 10 minutes.

Step 4. Optionally, select **Quit to DSA** to exit from the stand-alone memory diagnostic program.

Note: After you exit from the stand-alone memory diagnostic environment, you must restart the server to access the stand-alone memory diagnostic environment again.

Step 5. Type **gui** to display the graphical user interface, or type **cmd** to display the DSA interactive menu.

Step 6. Follow the instructions on the screen to select the diagnostic test to run.

If the diagnostic programs do not detect any hardware errors but the problem remains during normal server operation, a software error might be the cause. If you suspect a software problem, see the information that comes with your software.

A single problem might cause more than one error message. When this happens, correct the cause of the first error message. The other error messages usually will not occur the next time you run the diagnostic programs.

If the server stops during testing and you cannot continue, restart the server and try running the DSA Preboot diagnostic programs again. If the problem remains, replace the component that was being tested when the server stopped.

Diagnostic text messages

Diagnostic text messages are displayed while the tests are running.

A diagnostic text message contains one of the following results:

Passed: The test was completed without any errors.

Failed: The test detected an error.

Aborted: The test could not proceed because of the server configuration.

Additional information concerning test failures is available in the extended diagnostic results for each test.

Viewing the test log results and transferring the DSA collection

Use this information to view the test log results and transferring the DSA collection.

To view the test log for the results when the tests are completed, click the **Success** link in the Status column, if you are running the DSA graphical user interface, or type `:x` to exit the Execute Tests menu, if you are running the DSA interactive menu, or select **Diagnostic Event Log** in the graphical user interface. To transfer DSA Preboot collections to an external USB device, type the `copy` command in the DSA interactive menu.

- If you are running the DSA graphical user interface (GUI), click the **Success** link in the Status column.
- If you are running the DSA interactive menu (CLI), type `:x` to exit the Execute Tests menu; then, select **completed tests** to view the results.

You can also send the DSA error log to the Support Web site to aid in diagnosing the server problems.

Automated service request (call home)

Lenovo provides tools that can automatically collect and send data or call Lenovo Support when an error is detected. These tools can help Lenovo Support speed up the process of diagnosing problems.

The following sections provide information about the call home tools.

Electronic Service Agent

Electronic Service Agent™ monitors, tracks, and captures system hardware errors and hardware and software inventory information, and reports serviceable problems directly to Lenovo Support.

You can also choose to collect data manually. It uses minimal system resources, and can be downloaded from the Lenovo Web site. For more information and to download Electronic Service Agent, go to http://www-01.ibm.com/support/esa/.

Error messages

This section provides the list of error codes and messages for UEFI/POST, IMM, and DSA that are generated when a problem is detected.

See Appendix A "Integrated management module 2.1 (IMM2.1) error messages" on page 183, Appendix B "UEFI/POST diagnostic codes" on page 753, and Appendix C "DSA diagnostic test results" on page 775 for more information.

Troubleshooting by symptom

Use the troubleshooting tables to find solutions to problems that have identifiable symptoms.

If you cannot find a solution to the problem in these tables, see Appendix C "DSA diagnostic test results" on page 775 for information about testing the server and "Running the DSA Preboot diagnostic programs" on page 61 for additional information about running DSA Preboot program. For additional information to help you solve problems, see "Start here" on page 47.

If you have just added new software or a new optional device and the server is not working, complete the following steps before you use the troubleshooting tables:

Step 1. Check the system-error LED on the operator information panel (see "Operator information panel" on page 15).

Step 2. Remove the software or device that you just added.

Step 3. Run Dynamic System Analysis (DSA) to determine whether the server is running correctly (for information about using DSA, see Appendix C "DSA diagnostic test results" on page 775).

Step 4. Reinstall the new software or new device.

General problems

Use this information to solve general problems.

Table 8. General symptoms and actions

• **Follow the suggested actions in the order in which they are listed in the Action column until the problem is solved.** • **If an action step is preceded by "(Trained technician only)," that step must be performed only by a trained technician.** • **Go to the Support Web site at http://www.lenovo.com/support to check for technical information, hints, tips, and new device drivers or to submit a request for information.**	
Symptom	**Action**
A cover latch is broken, an LED is not working, or a similar problem has occurred.	If the part is a CRU, replace it. If the part is a microprocessor or the system board, the part must be replaced by a trained technician.
The server is hung while the screen is on. Cannot start the Setup Utility by pressing F1.	1. See "Nx-boot failure" on page 87 for more information. 2. See "Recovering the server firmware (UEFI update failure)" on page 85 for more information.

Hard disk drive problems

Use this information to solve hard disk drive problems.

Table 9. Hard disk drive symptoms and actions

- **Follow the suggested actions in the order in which they are listed in the Action column until the problem is solved.**
- **If an action step is preceded by "(Trained technician only)," that step must be performed only by a trained technician.**
- **Go to the Support Web site at http://www.lenovo.com/support to check for technical information, hints, tips, and new device drivers or to submit a request for information.**

Symptom	Action
A hard disk drive has failed, and the associated yellow hard disk drive status LED is lit.	Replace the failed hard disk drive (see "Removing hot-swap hard disk drives" on page 118 and "Replacing a front HDD/SSD" on page 101).
A newly installed hard disk drive is not recognized.	1. Make sure that the installed hard disk drive is supported. For a list of supported optional devices, see http://www.lenovo.com/ serverproven/. 2. Observe the associated yellow hard disk drive status LED. If the LED is lit, it indicates a drive fault. 3. If the LED is lit, remove the drive from the bay, wait 45 seconds, and reinsert the drive, making sure that the drive assembly connects to the hard disk drive backplane. 4. Observe the associated green hard disk drive activity LED and the yellow status LED: • If the green activity LED is flashing and the yellow status LED is not lit, the drive is recognized by the controller and is working correctly. Run the DSA diagnostics program to determine whether the drive is detected. • If the green activity LED is flashing and the yellow status LED is flashing slowly, the drive is recognized by the controller and is rebuilding. • If neither LED is lit or flashing, check the hard disk drive backplane (go to Step 5 on page 65). • If the green activity LED is flashing and the yellow status LED is lit, replace the drive. If the activity of the LEDs remains the same, go to Step 5 on page 65. If the activity of the LEDs changes, return to Step 2 on page 65. 5. Make sure that the hard disk drive backplane is correctly seated. When it is correctly seated, the drive assemblies correctly connect to the backplane without bowing or causing movement of the backplane. 6. Reseat the backplane power cable and repeat Step 2 on page 65 through Step 4 on page 65. 7. Reseat the backplane signal cable and repeat Step 2 on page 65 through Step 4 on page 65. 8. Suspect the backplane signal cable or the backplane: • If the server has eight hot-swap bays: a. Replace the affected backplane signal cable. b. Replace the affected backplane. 9. See "Problem determination tips" on page 83.
Multiple hard disk drives fail.	Make sure that the hard disk drive, SAS/SATA adapter, and server device drivers and firmware are at the latest level. **Important:** Some cluster solutions require specific code levels or coordinated code updates. If the device is part of a cluster solution, verify that the latest level of code is supported for the cluster solution before you update the code.

Table 9. Hard disk drive symptoms and actions (continued)

• **Follow the suggested actions in the order in which they are listed in the Action column until the problem is solved.** • **If an action step is preceded by "(Trained technician only)," that step must be performed only by a trained technician.** • **Go to the Support Web site at http://www.lenovo.com/support to check for technical information, hints, tips, and new device drivers or to submit a request for information.**	
Symptom	**Action**
Multiple hard disk drives are offline.	1. Review the storage subsystem logs for indications of problems within the storage subsystem, such as backplane or cable problems. 2. See "Problem determination tips" on page 83.
A replacement hard disk drive does not rebuild.	1. Make sure that the hard disk drive is recognized by the adapter (the green hard disk drive activity LED is flashing). 2. Review the SAS/SATA adapter documentation to determine the correct configuration parameters and settings.
A green hard disk drive activity LED does not accurately represent the actual state of the associated drive.	If the green hard disk drive activity LED does not flash when the drive is in use, run the DSA Preboot diagnostic programs to collect error logs (see "Running the DSA Preboot diagnostic programs" on page 61). • If there is a hard disk drive error log, replace the affected hard disk drive. • If there is no disk drive error log error log, replace the affected backplane.
A yellow hard disk drive status LED does not accurately represent the actual state of the associated drive.	1. If the yellow hard disk drive LED and the RAID adapter software do not indicate the same status for the drive, complete the following steps: a. Turn off the server. b. Reseat the SAS/SATA adapter. c. Reseat the backplane signal cable and backplane power cable. d. Reseat the hard disk drive. e. Turn on the server and observe the activity of the hard disk drive LEDs. 2. See "Problem determination tips" on page 83.

Intermittent problems

Use this information to solve intermittent problems.

Table 10. Intermittent problems and actions

• **Follow the suggested actions in the order in which they are listed in the Action column until the problem is solved.** • **If an action step is preceded by "(Trained technician only)," that step must be performed only by a trained technician.** • **Go to the Support Web site at http://www.lenovo.com/support to check for technical information, hints, tips, and new device drivers or to submit a request for information.**	
Symptom	**Action**
A problem occurs only occasionally and is difficult to diagnose.	1. Make sure that: • All cables and cords are connected securely to the rear of the server and attached devices. • When the server is turned on, air is flowing from the fan grille. If there is no airflow, the fan is not working. This can cause the server to overheat and shut down. 2. Check the system-error log or IMM event logs (see "Event logs" on page 57).
The server resets (restarts) occasionally.	1. If the reset occurs during POST and the POST watchdog timer is enabled (click **System Settings → Recovery → System Recovery → POST Watchdog Timer** in the Setup Utility to see the POST watchdog setting), make sure that sufficient time is allowed in the watchdog timeout value (**POST Watchdog Timer**). If the server continues to reset during POST, see Appendix B "UEFI/POST diagnostic codes" on page 753 and Appendix C "DSA diagnostic test results" on page 775. 2. If neither condition applies, check the system-error log or IMM system-event log (see "Event logs" on page 57).

Keyboard, mouse, or USB-device problems

Use this information to solve keyboard, mouse, or USB-device problems.

Table 11. Keyboard, mouse, or USB-device's symptoms and actions

• **Follow the suggested actions in the order in which they are listed in the Action column until the problem is solved.** • **If an action step is preceded by "(Trained technician only)," that step must be performed only by a trained technician.** • **Go to the Support Web site at http://www.lenovo.com/support to check for technical information, hints, tips, and new device drivers or to submit a request for information.**	
Symptom	**Action**
All or some keys on the keyboard do not work.	1. Make sure that: • The keyboard cable is securely connected. • The server and the monitor are turned on. 2. If you are using a USB keyboard, run the Setup Utility and enable the operation. 3. If you are using a USB keyboard and it is connected to a USB hub, disconnect the keyboard from the hub and connect it directly to the server. 4. Replace the keyboard.
The mouse or USB-device does not work.	1. Make sure that: • The mouse or USB device cable is securely connected to the server. • The mouse or USB device drivers are installed correctly. • The server and the monitor are turned on. • The mouse option is enabled in the Setup Utility. 2. If you are using a USB mouse or USB device and it is connected to a USB hub, disconnect the mouse or USB device from the hub and connect it directly to the server. 3. Replace the mouse or USB-device.

Memory problems

Use this information to solve memory problems.

Table 12. Memory problems and actions

• **Follow the suggested actions in the order in which they are listed in the Action column until the problem is solved.** • **If an action step is preceded by "(Trained technician only)," that step must be performed only by a trained technician.** • **Go to the Support Web site at http://www.lenovo.com/support to check for technical information, hints, tips, and new device drivers or to submit a request for information.**	
Symptom	**Action**
The amount of system memory that is displayed is less than the amount of installed physical memory.	**Note:** Each time you install or remove a DIMM, you must disconnect the server from the power source; then, wait 10 seconds before restarting the server. 1. Make sure that: • No error LEDs are lit on the operator information panel. • No DIMM error LEDs are lit on the system board. • Memory mirrored channel does not account for the discrepancy. • The memory modules are seated correctly. • You have installed the correct type of memory. • If you changed the memory, you updated the memory configuration in the Setup Utility. • All banks of memory are enabled. The server might have automatically disabled a memory bank when it detected a problem, or a memory bank might have been manually disabled. • There is no memory mismatch when the server is at the minimum memory configuration. 2. Reseat the DIMMs, and then restart the server. 3. Check the POST error log: • If a DIMM was disabled by a systems-management interrupt (SMI), replace the DIMM. • If a DIMM was disabled by the user or by POST, reseat the DIMM; then, run the Setup Utility and enable the DIMM. 4. Check that all DIMMs are initialized in the Setup Utility; then, run memory diagnostics (see "Running the DSA Preboot diagnostic programs" on page 61). 5. Reverse the DIMMs between the channels (of the same microprocessor), and then restart the server. If the problem is related to a DIMM, replace the failing DIMM. 6. Re-enable all DIMMs using the Setup Utility, and then restart the server. 7. (Trained technician only) Install the failing DIMM into a DIMM connector for microprocessor 2 (if installed) to verify that the problem is not the microprocessor or the DIMM connector. 8. (Trained technician only) Replace the system board.
Multiple DIMMs in a channel are identified as failing.	**Note:** Each time you install or remove a DIMM, you must disconnect the server from the power source; then, wait 10 seconds before restarting the server. 1. Reseat the DIMMs; then, restart the server. 2. Remove the highest-numbered DIMM of those that are identified and replace it with an identical known good DIMM; then, restart the server. Repeat as necessary. If the failures continue after all identified DIMMs are replaced, go to step 4. 3. Return the removed DIMMs, one at a time, to their original connectors, restarting the server after each DIMM, until a DIMM fails. Replace each failing

Table 12. Memory problems and actions (continued)

• **Follow the suggested actions in the order in which they are listed in the Action column until the problem is solved.** • **If an action step is preceded by "(Trained technician only)," that step must be performed only by a trained technician.** • **Go to the Support Web site at http://www.lenovo.com/support to check for technical information, hints, tips, and new device drivers or to submit a request for information.**	
Symptom	**Action**
	DIMM with an identical known good DIMM, restarting the server after each DIMM replacement. Repeat step 3 until you have tested all removed DIMMs. 4. Replace the highest-numbered DIMM of those identified; then, restart the server. Repeat as necessary. 5. Reverse the DIMMs between the channels (of the same microprocessor), and then restart the server. If the problem is related to a DIMM, replace the failing DIMM. 6. (Trained technician only) Install the failing DIMM into a DIMM connector for microprocessor 2 (if installed) to verify that the problem is not the microprocessor or the DIMM connector. 7. (Trained technician only) Replace the system board.

Microprocessor problems

Use this information to solve microprocessor problems.

Table 13. Microprocessor's symptoms and actions

• **Follow the suggested actions in the order in which they are listed in the Action column until the problem is solved.** • **If an action step is preceded by "(Trained technician only)," that step must be performed only by a trained technician.** • **Go to the Support Web site at http://www.lenovo.com/support to check for technical information, hints, tips, and new device drivers or to submit a request for information.**	
Symptom	**Action**
The server goes directly to the POST Event Viewer when it is turned on.	1. Correct any errors that are indicated by the operator information panel or LCD operating panel assembly (see "Operator information panel" on page 15 or "LCD operating panel assembly" on page 15). 2. Make sure that the server supports all the microprocessors and that the microprocessors match in speed and cache size. To view the microprocessor information, run the Setup Utility and select **System Information → System Summary → Processor Details**. 3. (Trained technician only) Make sure that microprocessor 1 is seated correctly. 4. (Trained technician only) Remove microprocessor 2 and restart the server. 5. Replace the following components one at a time, in the order shown, restarting the server each time: a. (Trained technician only) Microprocessor b. (Trained technician only) System board

Monitor and video problems

Use this information to solve monitor and video problems.

Some Lenovo monitors have their own self-tests. If you suspect a problem with your monitor, see the documentation that comes with the monitor for instructions for testing and adjusting the monitor. If you cannot diagnose the problem, call for service.

Table 14. Monitor and video's symptoms and actions

- **Follow the suggested actions in the order in which they are listed in the Action column until the problem is solved.**
- **If an action step is preceded by "(Trained technician only)," that step must be performed only by a trained technician.**
- **Go to the Support Web site at http://www.lenovo.com/support to check for technical information, hints, tips, and new device drivers or to submit a request for information.**

Symptom	Action
Testing the monitor.	1. Make sure that the monitor cables are firmly connected. 2. Try using a different monitor on the server, or try using the monitor that is being tested on a different server. 3. Run the diagnostic programs. If the monitor passes the diagnostic programs, the problem might be a video device driver. 4. (Trained technician only) Replace the system board.
The screen is blank.	1. If the server is attached to a KVM switch, bypass the KVM switch to eliminate it as a possible cause of the problem: connect the monitor cable directly to the correct connector on the rear of the server. 2. The IMM2.1 remote presence function is disabled if you install an optional video adapter. To use the IMM2.1 remote presence function, remove the optional video adapter. 3. If the server installed with the graphical adapters while turning on the server, the Lenovo logo displays on the screen after approximately 3 minutes. This is normal operation while the system loads. 4. Make sure that: • The server is turned on. If there is no power to the server, see "Power problems" on page 73. • The monitor cables are connected correctly. • The monitor is turned on and the brightness and contrast controls are adjusted correctly. 5. Make sure that the correct server is controlling the monitor, if applicable. 6. Make sure that damaged server firmware is not affecting the video; see "Updating the firmware" on page 29. 7. Observe the checkpoint LEDs on the system board; if the codes are changing, go to step 6. 8. Replace the following components one at a time, in the order shown, restarting the server each time: a. Monitor b. Video adapter (if one is installed) c. (Trained technician only) System board 9. See "Solving undetermined problems" on page 83.

Table 14. Monitor and video's symptoms and actions (continued)

- **Follow the suggested actions in the order in which they are listed in the Action column until the problem is solved.**
- **If an action step is preceded by "(Trained technician only)," that step must be performed only by a trained technician.**
- **Go to the Support Web site at http://www.lenovo.com/support to check for technical information, hints, tips, and new device drivers or to submit a request for information.**

Symptom	Action
The monitor works when you turn on the server, but the screen goes blank when you start some application programs.	1. Make sure that: • The application program is not setting a display mode that is higher than the capability of the monitor. • You installed the necessary device drivers for the application. 2. Run video diagnostics (see "Running the DSA Preboot diagnostic programs" on page 61). • If the server passes the video diagnostics, the video is good; see "Solving undetermined problems" on page 83. • (Trained technician only) If the server fails the video diagnostics, replace the system board.
The monitor has screen jitter, or the screen image is wavy, unreadable, rolling, or distorted.	1. If the monitor self-tests show that the monitor is working correctly, consider the location of the monitor. Magnetic fields around other devices (such as transformers, appliances, fluorescents, and other monitors) can cause screen jitter or wavy, unreadable, rolling, or distorted screen images. If this happens, turn off the monitor. **Attention:** Moving a color monitor while it is turned on might cause screen discoloration. Move the device and the monitor at least 305 mm (12 inches) apart, and turn on the monitor. **Notes:** a. To prevent diskette drive read/write errors, make sure that the distance between the monitor and any external diskette drive is at least 76 mm (3 inches). b. Non-Lenovo monitor cables might cause unpredictable problems. 2. Reseat the monitor cable. 3. Replace the components listed in step 2 one at a time, in the order shown, restarting the server each time: a. Monitor cable b. Video adapter (if one is installed) c. Monitor d. (Trained technician only) System board
Wrong characters appear on the screen.	1. If the wrong language is displayed, update the server firmware to the latest level (see "Updating the firmware" on page 29) with the correct language. 2. Reseat the monitor cable. 3. Replace the components listed in step 2 one at a time, in the order shown, restarting the server each time: a. Monitor cable b. Video adapter (if one is installed)

Table 14. Monitor and video's symptoms and actions (continued)

• **Follow the suggested actions in the order in which they are listed in the Action column until the problem is solved.** • **If an action step is preceded by "(Trained technician only)," that step must be performed only by a trained technician.** • **Go to the Support Web site at http://www.lenovo.com/support to check for technical information, hints, tips, and new device drivers or to submit a request for information.**	
Symptom	**Action**
	c. Monitor d. (Trained technician only) System board

Network connection problems

Use this information to solve network connection problems.

Table 15. Network connection problems and actions

• **Follow the suggested actions in the order in which they are listed in the Action column until the problem is solved.** • **If an action step is preceded by "(Trained technician only)," that step must be performed only by a trained technician.** • **Go to the Support Web site at http://www.lenovo.com/support to check for technical information, hints, tips, and new device drivers or to submit a request for information.**	
Symptom	**Action**
The server will not connect to the network.	1. If the network adapter is newly installed, verify that it is supported by the server (see http://www.lenovo.com/ serverproven/). 2. Verify the network adapter slot power state and configuration (see "Using the Setup Utility" on page 31). 3. Check to make sure that the server is properly connected to the network and that there is no damage to the network cables. 4. Check the firmware device driver. 5. Check the Retain Tips for related issues on the Support Web site at http://www.lenovo.com/support.
The server intermittently looses connection.	1. Verify that the network router or switch is operating properly. 2. Check to make sure that the server is properly connected to the network. 3. Check the firmware device driver. 4. Check the Retain Tips for related issues on the Support Web site at http://www.lenovo.com/support.

Power problems

Use this information to solve power problems.

Table 16. Power problems and actions

- **Follow the suggested actions in the order in which they are listed in the Action column until the problem is solved.**
- **If an action step is preceded by "(Trained technician only)," that step must be performed only by a trained technician.**
- **Go to the Support Web site at http://www.lenovo.com/support to check for technical information, hints, tips, and new device drivers or to submit a request for information.**

Symptom	Action
The power-control button does not work, and the reset button does not work (the server does not start). **Note:** The power-control button will not function until approximately 20 seconds after the server has been connected to power.	1. Make sure that the power-control button is working correctly: a. Disconnect the server power cords. b. Reconnect the power cords. c. (Trained technician only) Reseat the operator information panel cable, and then repeat steps 1a and 1b. • (Trained technician only) If the server starts, reseat the operator information panel. If the problem remains, replace the operator information panel. • If the server does not start, bypass the power-control button by using the force power-on jumper (see "System-board switches, jumpers, and buttons" on page 22). If the server starts, reseat the operator information panel. If the problem remains, replace the operator information panel. 2. Make sure that the reset button is working correctly: a. Disconnect the server power cords. b. Reconnect the power cords. c. (Trained technician only) Reseat the operator information panel cable, and then repeat steps 2a and 2b. • (Trained technician only) If the server starts, replace the operator information panel. • If the server does not start, go to step 3. 3. Make sure that both power supplies installed in the server are of the same type. Mixing different ratings of power supplies in the server will cause a system error (CONFIG icon will be shown on the LCD system information display panel). 4. Make sure that: • The power source meets the minimum voltage requirement for the installed power supplies. • The type of memory that is installed is correct. • The DIMMs are fully seated. • The LEDs on the power supply do not indicate a problem. • The microprocessors are installed in the correct sequence. 5. Reseat the following components: a. Operator information panel connector b. Power supplies 6. Replace the components listed in step 5 one at a time, in the order shown, restarting the server each time. 7. If you just installed an optional device, remove it, and restart the server. If the server now starts, you might have installed more devices than the power supply supports. 8. See "Power-supply LEDs" on page 54. 9. See "Solving undetermined problems" on page 83.

Table 16. Power problems and actions (continued)

• **Follow the suggested actions in the order in which they are listed in the Action column until the problem is solved.** • **If an action step is preceded by "(Trained technician only)," that step must be performed only by a trained technician.** • **Go to the Support Web site at http://www.lenovo.com/support to check for technical information, hints, tips, and new device drivers or to submit a request for information.**	
Symptom	**Action**
Pwr rail 1 error has been recorded in the system event log.	1. Disconnect the server power cords. 2. (Trained technician only) remove microprocessor 1 if the Pwr rail 1 error has been recorded in the system event log. 3. (Trained technician only) replace the system board (see "For service technician only: removing the system board" on page 174 and "For service technician only: replacing the system board" on page 176). 4. Reinstall the component; then, restarting the server. If the Pwr rail 1 error has been recorded in the system event log again, the component that you just reinstalled is defective. Replace the defective component. • (Trained technician only) Microprocessor 1 (see "For service technician only: removing a microprocessor and heat sink" on page 162 and "For service technician only: replacing a microprocessor and heat sink" on page 166).
Pwr rail 2 error has been recorded in the system event log.	1. Disconnect the server power cords. 2. (Trained technician only) remove microprocessor 2 if Pwr rail 2 error has been recorded in the system event log. 3. Restart the server. If the Pwr rail 2 error has been recorded in the IMM event log again, (trained technician only) replace the system board (see "For service technician only: removing the system board" on page 174 and "For service technician only: replacing the system board" on page 176). 4. Reinstall the component; then, restarting the server. If the Pwr Rail 2 error has been recorded in the system event log again, the component that you just reinstalled is defective. Replace the defective component. • (Trained technician only) Microprocessor 2 (see "For service technician only: removing a microprocessor and heat sink" on page 162 and "For service technician only: replacing a microprocessor and heat sink" on page 166).

Table 16. Power problems and actions (continued)

- **Follow the suggested actions in the order in which they are listed in the Action column until the problem is solved.**
- **If an action step is preceded by "(Trained technician only)," that step must be performed only by a trained technician.**
- **Go to the Support Web site at http://www.lenovo.com/support to check for technical information, hints, tips, and new device drivers or to submit a request for information.**

Symptom	Action
Pwr rail 3 error has been recorded in the system event log.	1. Disconnect the server power cords. 2. Remove the following components if Pwr rail 3 error has been recorded in the system event log: • DIMMs 1 through 12 • Fan 3 3. Restart the server. If the Pwr rail 3 error has been recorded in the system event log again, (trained technician only) replace the system board (see "For service technician only: removing the system board" on page 174 and "For service technician only: replacing the system board" on page 176). 4. Reinstall the components one at a time, in the order shown, restarting the server each time. If the Pwr rail 3 error has been recorded in the system event log again, the component that you just reinstalled is defective. Replace the defective component. • DIMMs 1 through 12 (see "Removing a memory module" on page 120 and "Memory module installation" on page 121). • Fan 3 (see "Removing a thermal kit (hot-swap fan)" on page 135 and "Replacing a thermal kit (hot-swap fan)" on page 136).
Pwr rail 4 error has been recorded in the system event log.	1. Disconnect the server power cords. 2. Remove the following components if the Pwr rail 4 error has been recorded in the system event log: • Fan 5 • Fan 6 • DIMMs 13 through 24 3. Restart the server. If the Pwr rail 4 error has been recorded in the system event log again, (trained technician only) replace the system board (see "For service technician only: removing the system board" on page 174 and "For service technician only: replacing the system board" on page 176). 4. Reinstall the components one at a time, in the order shown, restarting the server each time. If the Pwr Rail 4 error has been recorded in the system event log again, the component that you just reinstalled is defective. Replace the defective component. • DIMMs 13 through 24 (see "Removing a memory module" on page 120 and "Memory module installation" on page 121). • Fan 5 (see "Removing a thermal kit (hot-swap fan)" on page 135 and "Replacing a thermal kit (hot-swap fan)" on page 136). • Fan 6

Table 16. Power problems and actions (continued)

• **Follow the suggested actions in the order in which they are listed in the Action column until the problem is solved.** • **If an action step is preceded by "(Trained technician only)," that step must be performed only by a trained technician.** • **Go to the Support Web site at http://www.lenovo.com/support to check for technical information, hints, tips, and new device drivers or to submit a request for information.**	
Symptom	**Action**
Pwr rail 5 error has been recorded in the system event log.	1. Disconnect the server power cords. 2. Remove the following components if the Pwr rail 5 error has been recorded in the system event log: • Fan 7 • Fan 8 • SAS/SATA hard disk drives and USB 3. Restart the server. If the Pwr rail 5 error has been recorded in the system event log again, (trained technician only) replace the system board (see "For service technician only: removing the system board" on page 174 and "For service technician only: replacing the system board" on page 176). 4. Reinstall the components one at a time, in the order shown, restarting the server each time. If the Pwr Rail 5 error has been recorded in the system event log again, the component that you just reinstalled is defective. Replace the defective component. • Hard disk drives and USB • Fan 7 (see "Removing a thermal kit (hot-swap fan)" on page 135 and "Memory module installation" on page 121). • Fan 8
Pwr rail 6 error has been recorded in the system event log.	1. Disconnect the server power cords. 2. Remove the following components if the Pwr rail 6 error has been recorded in the system event log: • Optional cable for VGA external power • PCI-E x8 and x16 (maximum expansion is 4 adapter cards) • PCI-E hard disk drives 3. Restart the server. If the Pwr rail 6 error has been recorded in the system event log again, (trained technician only) replace the system board (see "For service technician only: removing the system board" on page 174 and "For service technician only: replacing the system board" on page 176). 4. Reinstall the components one at a time, in the order shown, restarting the server each time. If the Pwr Rail 6 error has been recorded in the system event log again, the component that you just reinstalled is defective. Replace the defective component. • Optional cable for VGA external power • PCI riser-card assembly (see "Removing a PCI riser-card assembly" on page 128 and "Replacing a PCI riser-card assembly" on page 129). • Hard disk drives

Table 16. Power problems and actions (continued)

• **Follow the suggested actions in the order in which they are listed in the Action column until the problem is solved.** • **If an action step is preceded by "(Trained technician only)," that step must be performed only by a trained technician.** • **Go to the Support Web site at http://www.lenovo.com/support to check for technical information, hints, tips, and new device drivers or to submit a request for information.**	
Symptom	**Action**
Pwr rail 7 error has been recorded in the system event log.	1. Disconnect the server power cords. 2. Remove the following components if the Pwr rail 7 error has been recorded in the system event log: • Fan 1 • Fan 2 3. Restart the server. If the Pwr rail 6 error has been recorded in the system event log again, (trained technician only) replace the system board (see "For service technician only: removing the system board" on page 174 and "For service technician only: replacing the system board" on page 176). 4. Reinstall the components one at a time, in the order shown, restarting the server each time. If the Pwr Rail 6 error has been recorded in the system event log again, the component that you just reinstalled is defective. Replace the defective component. • Fan 1 (see "Removing a thermal kit (hot-swap fan)" on page 135 and "Replacing a thermal kit (hot-swap fan)" on page 136). • Fan 2
The server does not turn off.	1. Determine whether you are using an Advanced Configuration and Power Interface (ACPI) or a non-ACPI operating system. If you are using a non-ACPI operating system, complete the following steps: a. Press `Ctrl+Alt+Delete`. b. Turn off the server by pressing the power-control button and hold it down for 5 seconds. c. Restart the server. d. If the server fails POST and the power-control button does not work, disconnect the power cord for 20 seconds; then, reconnect the power cord and restart the server. 2. If the problem remains or if you are using an ACPI-aware operating system, suspect the system board.
The server unexpectedly shuts down, and the LEDs on the operator information panel are not lit.	See "Solving undetermined problems" on page 83.

Serial-device problems

Use this information to solve serial-device problems.

Table 17. Serial device problems and actions

• **Follow the suggested actions in the order in which they are listed in the Action column until the problem is solved.** • **If an action step is preceded by "(Trained technician only)," that step must be performed only by a trained technician.** • **Go to the Support Web site at http://www.lenovo.com/support to check for technical information, hints, tips, and new device drivers or to submit a request for information.**	
Symptom	**Action**
The number of serial ports that are identified by the operating system is less than the number of installed serial ports.	1. Make sure that: • Each port is assigned a unique address in the Setup Utility and none of the serial ports is disabled. • The serial-port adapter (if one is present) is seated correctly. 2. Reseat the serial port adapter. 3. Replace the serial port adapter.
A serial device does not work.	1. Make sure that: • The device is compatible with the server. • The serial port is enabled and is assigned a unique address. • The device is connected to the correct connector (see "System-board internal connectors" on page 21). 2. Reseat the following components: a. Failing serial device b. Serial cable 3. Replace the components listed in step 2 one at a time, in the order shown, restarting the server each time. 4. (Trained technician only) Replace the system board.

Software problems

Use this information to solve software problems.

Table 18. Software problems and actions

• **Follow the suggested actions in the order in which they are listed in the Action column until the problem is solved.** • **If an action step is preceded by "(Trained technician only)," that step must be performed only by a trained technician.** • **Go to the Support Web site at http://www.lenovo.com/support to check for technical information, hints, tips, and new device drivers or to submit a request for information.**	
Symptom	**Action**
You suspect a software problem.	1. To determine whether the problem is caused by the software, make sure that: • The server has the minimum memory that is needed to use the software. For memory requirements, see the information that comes with the software. If you have just installed an adapter or memory, the server might have a memory-address conflict. • The software is designed to operate on the server. • Other software works on the server. • The software works on another server. 2. If you received any error messages when using the software, see the information that comes with the software for a description of the messages and suggested solutions to the problem. 3. Contact the software vendor.

Universal Serial Bus (USB) port problems

Use this information to USB port problems.

Table 19. Universal Serial Bus (USB) port problems and actions

• **Follow the suggested actions in the order in which they are listed in the Action column until the problem is solved.** • **If an action step is preceded by "(Trained technician only)," that step must be performed only by a trained technician.** • **Go to the Support Web site at http://www.lenovo.com/support to check for technical information, hints, tips, and new device drivers or to submit a request for information.**	
Symptom	**Action**
A USB device does not work.	1. Make sure that: • The correct USB device driver is installed. • The operating system supports USB devices. 2. Make sure that the USB configuration options are set correctly in the Setup Utility (see "Using the Setup Utility" on page 31 for more information). 3. If you are using a USB hub, disconnect the USB device from the hub and connect it directly to the server.

Video problems

Use this information to solve video problems.

See "Monitor and video problems" on page 71.

Solving power problems

Use this information to solve power problems.

Power problems can be difficult to solve. For example, a short circuit can exist anywhere on any of the power distribution buses. Usually, a short circuit will cause the power subsystem to shut down because of an overcurrent condition. To diagnose a power problem, use the following general procedure:

Step 1. Turn off the server and disconnect all power cords.

Step 2. Check for loose cables in the power subsystem. Also check for short circuits, for example, if a loose screw is causing a short circuit on a circuit board.

Step 3. Check for any errors indicated by the operator information panel or LCD operating panel assembly (see "Operator information panel" on page 15 or "LCD operating panel assembly" on page 15).

Step 4. If the check log LED on the operator information panel is lit, check the IMM event log for faulty Pwr rail and complete the following steps. Table 20 " Components associated with power rail errors" on page 81 identifies the components that are associated with each Pwr rail and the order in which to troubleshoot the components.

a. Disconnect the cables and power cords to all internal and external devices. Leave the power-supply cords connected.

b. For Pwr rail 1 error, complete the following steps:

1. (Trained technician only) Replace the system board.
2. (Trained technician only) Replace the microprocessor.

c. For other rail errors (Pwr rail 1 error, see step 4b), remove each component that is associated with the faulty Pwr rail, one at a time, in the sequence indicated in Table 20 " Components associated with power rail errors" on page 81, restarting the server each time, until the cause of the overcurrent condition is identified.

Table 20. Components associated with power rail errors

Pwr rail error in the IMM event log	Components
Pwr rail 1 error	• Microprocessor 1
Pwr rail 2 error	• Microprocessor 2
Pwr rail 3 error	• DIMMs 1 through 12 • Fan 3
Pwr rail 4 error	• Fan 5 • Fan 6 • DIMMs 13 through 24
Pwr rail 5 error	• Fan 7 • Fan 8 • SAS/SATA hard disk drives and USB

Table 20. Components associated with power rail errors (continued)

Pwr rail error in the IMM event log	Components
Pwr rail 6 error	• Optional cable for VGA external power • PCI-E and x16 (maximum expansion is 4 adapter cards) • PCI-E hard disk drives
Pwr rail 7 error	• Fan 1 • Fan 2

d. Replace the identified component.

Step 5. Remove the adapters and disconnect the cables and power cords to all internal and external devices until the server is at the minimum configuration that is required for the server to start (see "Power-supply LEDs" on page 54 for the minimum configuration).

Step 6. Reconnect all power cords and turn on the server. If the server starts successfully, reseat the adapters and devices one at a time until the problem is isolated.

If the server does not start from the minimum configuration, see "Power-supply LEDs" on page 54 to replace the components in the minimum configuration one at a time until the problem is isolated.

Solving Ethernet controller problems

The method that you use to test the Ethernet controller depends on which operating system you are using. See the operating-system documentation for information about Ethernet controllers, and see the Ethernet controller device-driver readme file.

Try the following procedures:

- Make sure that the correct device drivers, which come with the server are installed and that they are at the latest level.
- Make sure that the Ethernet cable is installed correctly.
  - The cable must be securely attached at all connections. If the cable is attached but the problem remains, try a different cable.
  - If you set the Ethernet controller to operate at 100 Mbps, you must use Category 5 cabling.
  - If you directly connect two servers (without a hub), or if you are not using a hub with X ports, use a crossover cable. To determine whether a hub has an X port, check the port label. If the label contains an X, the hub has an X port.
- Determine whether the hub supports auto-negotiation. If it does not, try configuring the integrated Ethernet controller manually to match the speed and duplex mode of the hub.
- Check the Ethernet controller LEDs on the rear panel of the server. These LEDs indicate whether there is a problem with the connector, cable, or hub.
  - The Ethernet link status LED is lit when the Ethernet controller receives a link pulse from the hub. If the LED is off, there might be a defective connector or cable or a problem with the hub.
  - The Ethernet transmit/receive activity LED is lit when the Ethernet controller sends or receives data over the Ethernet network. If the Ethernet transmit/receive activity is off, make sure that the hub and network are operating and that the correct device drivers are installed.
- Check the LAN activity LED on the rear of the server. The LAN activity LED is lit when data is active on the Ethernet network. If the LAN activity LED is off, make sure that the hub and network are operating and that the correct device drivers are installed.
- Check for operating-system-specific causes of the problem.

- Make sure that the device drivers on the client and server are using the same protocol.

If the Ethernet controller still cannot connect to the network but the hardware appears to be working, the network administrator must investigate other possible causes of the error.

Solving undetermined problems

If Dynamic System Analysis (DSA) did not diagnose the failure or if the server is inoperative, use the information in this section.

If you suspect that a software problem is causing failures (continuous or intermittent), see "Software problems" on page 79.

Corrupted data in CMOS memory or corrupted UEFI firmware can cause undetermined problems. To reset the CMOS data, use the CMOS jumper to clear the CMOS memory and override the power-on password; see Table 1 "System board jumpers" on page 23 for more information. If you suspect that the UEFI firmware is corrupted, see "Recovering the server firmware (UEFI update failure)" on page 85.

If the power supplies are working correctly, complete the following steps:

Step 1. Turn off the server.

Step 2. Make sure that the server is cabled correctly.

Step 3. Remove or disconnect the following devices, one at a time, until you find the failure. Turn on the server and reconfigure it each time.
- Any external devices
- Surge-suppressor device (on the server)
- Printer, mouse, and non-Lenovo devices
- Each adapter
- Hard disk drives
- Memory modules: the minimum configuration requirement is 2 GB DIMM in slot 1

Step 4. Turn on the server.

If the problem is solved when you remove an adapter from the server but the problem recurs when you reinstall the same adapter, suspect the adapter; if the problem recurs when you replace the adapter with a different one, suspect the riser card.

If you suspect a networking problem and the server passes all the system tests, suspect a network cabling problem that is external to the server.

Problem determination tips

Because of the variety of hardware and software combinations that can encounter, use the following information to assist you in problem determination. If possible, have this information available when requesting assistance from Lenovo.

The model name and serial number are located on the ID label on the front of the server as shown in the following illustration.

Note: The illustrations in this document might differ slightly from your hardware.

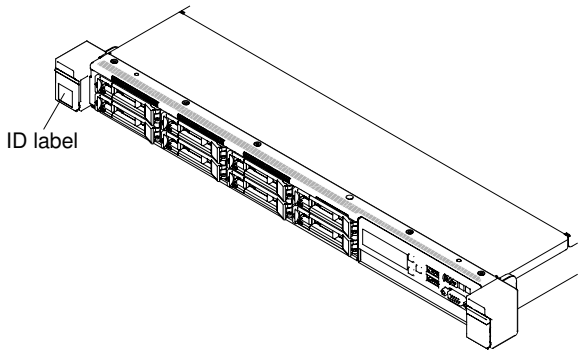

Figure 21. ID label

- Machine type and model
- Microprocessor or hard disk drive upgrades
- Failure symptom
  - Does the server fail the diagnostic tests?
  - What occurs? When? Where?
  - Does the failure occur on a single server or on multiple servers?
  - Is the failure repeatable?
  - Has this configuration ever worked?
  - What changes, if any, were made before the configuration failed?
  - Is this the original reported failure?
- Diagnostic program type and version level
- Hardware configuration (print screen of the system summary)
- UEFI firmware level
- IMM firmware level
- Operating system software

You can solve some problems by comparing the configuration and software setups between working and nonworking servers. When you compare servers to each other for diagnostic purposes, consider them identical only if all the following factors are exactly the same in all the servers:

- Machine type and model
- UEFI firmware level
- IMM firmware level
- Adapters and attachments, in the same locations
- Address jumpers, terminators, and cabling
- Software versions and levels
- Diagnostic program type and version level
- Configuration option settings
- Operating-system control-file setup

See Appendix D “Getting help and technical assistance” on page 885 for information about calling Lenovo for service.

Recovering the server firmware (UEFI update failure)

Use this information to recover the server firmware.

Important: Some cluster solutions require specific code levels or coordinated code updates. If the device is part of a cluster solution, verify that the latest level of code is supported for the cluster solution before you update the code.

If the server firmware has become corrupted, such as from a power failure during an update, you can recover the server firmware in the following way:

- **In-band method:** Recover server firmware, using either the boot block jumper (Automated Boot Recovery) and a server Firmware Update Package Service Pack.
- **Out-of-band method:** Use the IMM Web interface to update the firmware, using the latest server firmware update package.

Note: You can obtain a server update package from one of the following sources:

- Download the server firmware update from the World Wide Web.
- Contact your Lenovo service representative.

To download the server firmware update package from the World Wide Web, go to http://www.lenovo.com/support.

The flash memory of the server consists of a primary bank and a backup bank. You must maintain a bootable UEFI firmware image in the backup bank. If the server firmware in the primary bank becomes corrupted, you can either manually boot the backup bank with the UEFI boot backup jumper (J13), or in the case of image corruption, this will occur automatically with the Automated Boot Recovery function.

In-band manual recovery method

Use this information to recover the server firmware and restore the server operation to the primary bank.

To recover the server firmware and restore the server operation to the primary bank, complete the following steps:

Step 1. Read the safety information that begins on "Safety" on page v and "Installation guidelines" on page 108.

Step 2. Turn off the server, and disconnect all power cords and external cables.

Step 3. Remove the cover (see "Removing the cover" on page 112).

Step 4. Locate the UEFI boot backup jumper (J13) on the system board.

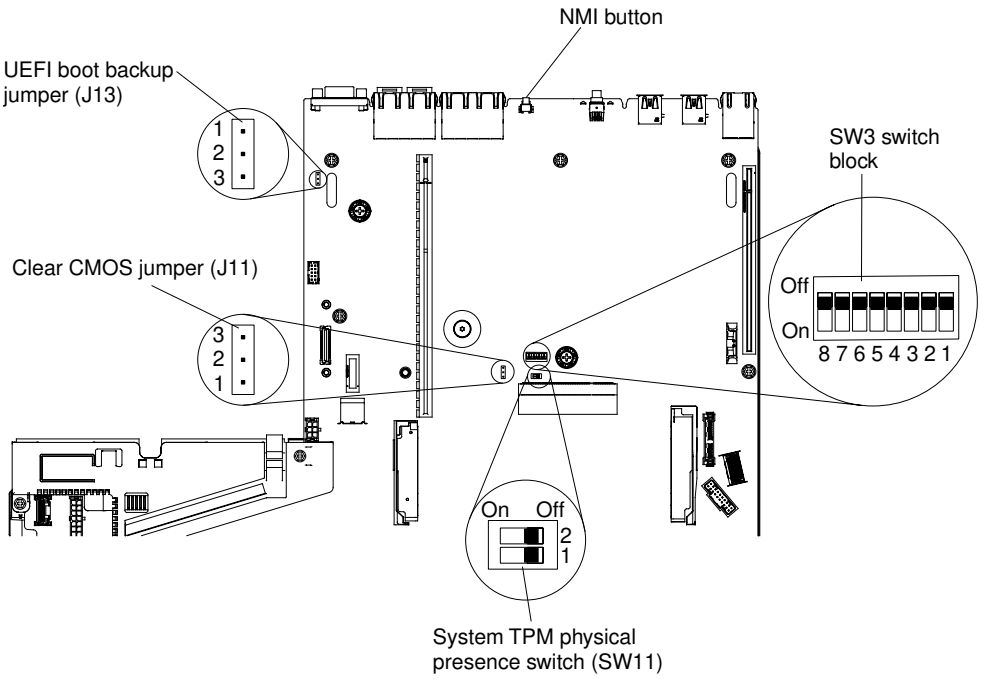

Figure 22. UEFI boot backup jumper (J13) location

Step 5. Move the UEFI boot backup jumper (J13) from pins 1 and 2 to pins 2 and 3 to enable the UEFI recovery mode.

Step 6. Reinstall the server cover; then, reconnect all power cords.

Step 7. Restart the server. The system begins the power-on self-test (POST).

Step 8. Boot the server to an operating system that is supported by the firmware update package that you downloaded.

Step 9. Perform the firmware update by following the instructions that are in the firmware update package readme file.

Step 10. Turn off the server and disconnect all power cords and external cables, and then remove the cover (see "Removing the cover" on page 112).

Step 11. Move the UEFI boot backup jumper (J13) from pins 2 and 3 back to the primary position (pins 1 and 2).

Step 12. Reinstall the cover (see "Replacing the cover" on page 113).

Step 13. Reconnect the power cord and any cables that you removed.

Step 14. Restart the server. The system begins the power-on self-test (POST). If this does not recover the primary bank, continue with the following steps.

Step 15. Remove the cover (see "Removing the cover" on page 112).

Step 16. Reset the CMOS by removing the coin-cell battery (see "Removing the coin-cell battery" on page 144).

Step 17. Leave the coin-cell battery out of the server for approximately 5 to 15 minutes.

Step 18. Reinstall the coin-cell battery (see "Replacing the coin-cell battery" on page 147).

Step 19. Reinstall the cover (see "Replacing the cover" on page 113).

Step 20. Reconnect the power cord and any cables that you removed.

Step 21. Restart the server. The system begins the power-on self-test (POST).

Step 22. If these recovery efforts fail, contact your Lenovo service representative for support.

In-band automated boot recovery method

Use this information to recover the server firmware and restore the server operation to the primary bank.

Note: Use this method if the BOARD LED is lit and there is a log entry or `Booting Backup Image` is displayed on the firmware splash screen; otherwise, use the in-band manual recovery method.

Step 1. Boot the server to an operating system that is supported by the firmware update package that you downloaded.

Step 2. Perform the firmware update by following the instructions that are in the firmware update package readme file.

Step 3. Restart the server.

Step 4. At the firmware splash screen, press F3 when prompted to restore to the primary bank. The server boots from the primary bank.

Out-of-band method

Use this information to recover the server firmware and restore the server operation to the primary bank.

See the IMM2.1 documentation (*Integrated Management Module II User's Guide*) at https://pubs.lenovo.com/imm2/product_page.html.

Automated boot recovery (ABR)

While the server is starting, if the integrated management module II detects problems with the server firmware in the primary bank, the server automatically switches to the backup firmware bank and gives you the opportunity to recover the firmware in the primary bank.

For instructions for recovering the UEFI firmware, see "Recovering the server firmware (UEFI update failure)" on page 85. After you have recovered the firmware in the primary bank, complete the following steps:

Step 1. Restart the server.

Step 2. When the prompt `Press F3 to restore to primary` is displayed, press F3 to start the server from the primary bank.

Nx-boot failure

Configuration changes, such as added devices or adapter firmware updates, and firmware or application code problems can cause the server to fail POST (the power-on self-test).

If this occurs, the server responds in either of the following ways:

- The server restarts automatically and attempts POST again.
- The server stops responding, and you must manually restart the server for the server to attempt POST again.

After a specified number of consecutive attempts (automatic or manual), the Nx-boot failure feature causes the server to revert to the default UEFI configuration and start the Setup Utility so that you can make the necessary corrections to the configuration and restart the server. If the server is unable to successfully complete POST with the default configuration, there might be a problem with the system board.

To specify the number of consecutive restart attempts that will trigger the Nx-boot failure feature, in the Setup Utility, click **System Settings → Recovery → POST Attempts → POST Attempts Limit**. The available options are 3, 6, 9, and 255 (disable Nx-boot failure).

Chapter 4. Parts listing, Lenovo Converged HX Series Type 8693

The following replaceable components are available for the Lenovo Converged HX Series Type 8693 server.

For an updated parts listing, go to http://www.lenovo.com/support.

Replaceable server components

Replaceable components consist of consumable parts, structural parts, and field replaceable units (FRUs).

- **Structural parts:** Purchase and replacement of structural parts (components, such as chassis assembly, and top cover) is your responsibility. If Lenovo acquires or installs a structural component at your request, you will be charged for the service. See "Structural parts" on page 97 for the list of structural parts.
- **Consumable parts:** Purchase and replacement of consumable parts is your responsibility. If Lenovo acquires or installs a consumable component at your request, you will be charged for the service.
- **Tier 1 customer replaceable unit (CRU):** Replacement of Tier 1 CRUs is your responsibility. If Lenovo installs a Tier 1 CRU at your request, you will be charged for the installation.
- **Tier 2 customer replaceable unit:** You may install a Tier 2 CRU yourself or request Lenovo to install it, at no additional charge, under the type of warranty service that is designated for your server.

For information about the terms of the warranty and getting service and assistance, see the *Safety, Support, and Warranty Information* document that comes with the server. For more information about getting service and assistance, see Appendix D "Getting help and technical assistance" on page 885.

The following illustration shows the major components in the server. The illustrations in this document might differ slightly from your hardware. For a list of structural parts, see "Structural parts" on page 97.

© Copyright Lenovo 2016, 2023

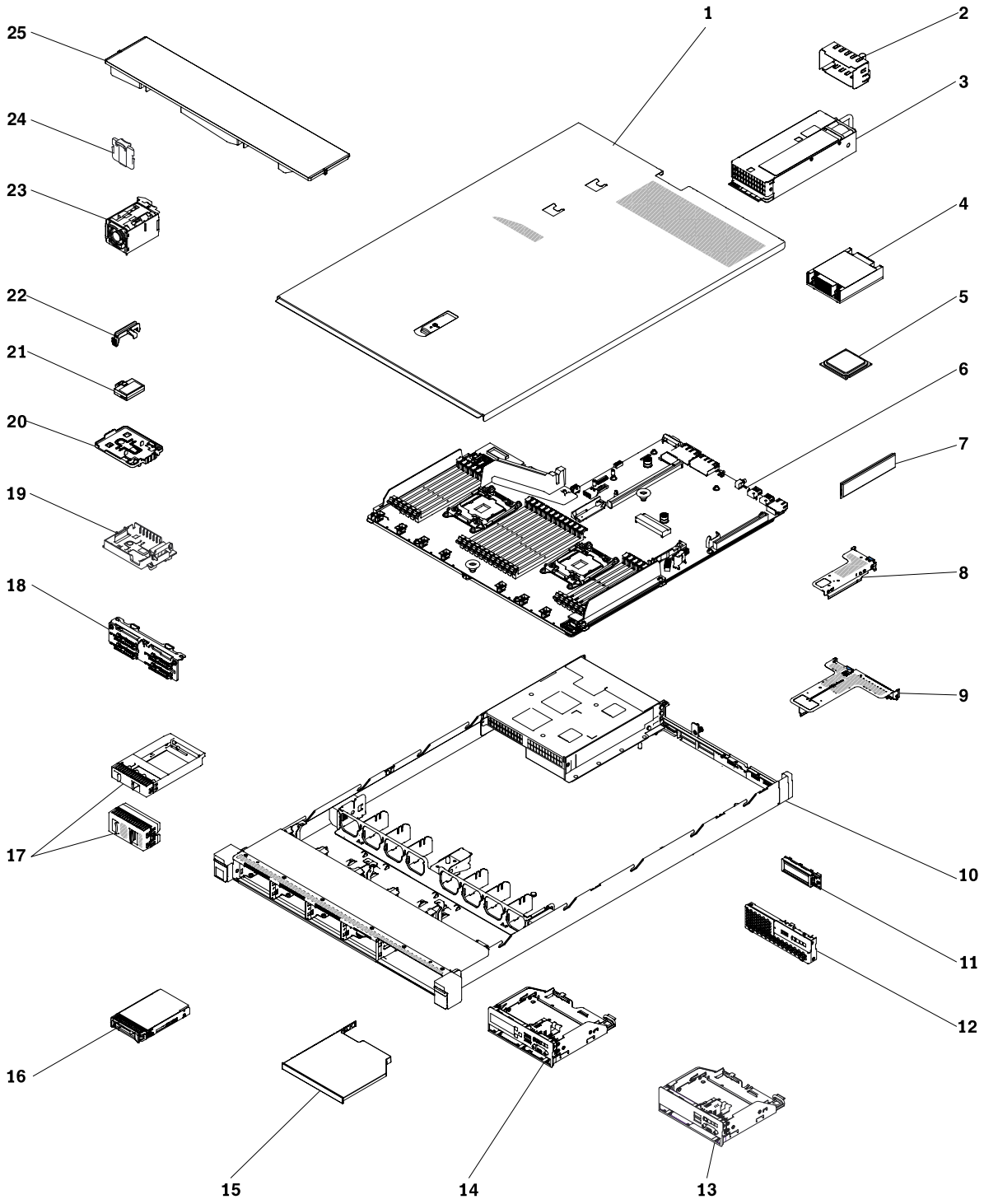

Figure 23. Server components

The following table lists the part numbers for the server replaceable components.

Index	Description	CRU part number (Tier 1)	CRU part number (Tier 2)
3	Power supply, 750 Watt, high efficiency, platinum, ac	94Y8142	
3	Power supply, 750 Watt, high efficiency, platinum, ac	00YL557	
3	Power supply, 750 Watt, high efficiency, platinum, ac	94Y8144	
3	Power supply, 750 Watt, high efficiency, platinum, ac	00YL555	
3	Power supply, 900 Watt, high efficiency, platinum, ac	94Y8146	
3	Power supply, 900 Watt, high efficiency, platinum, ac	94Y8148	
3	Power supply, Artesyn, 750 Watt, CFF V2, titanium, ac	00MX914	
3	Power supply, Artesyn, 750 Watt, CFF V2, platinum, ac	00MX915	
3	Power supply, Artesyn, 900 Watt, CFF V2, platinum, ac	00MX916	
3	Power supply, Delta, 750 Watt, CFF V2, platinum, ac	00MX930	
3	Power supply, Delta, 900 Watt, CFF V2, platinum, ac	00MX931	
3	Power supply, AcBel, 750 Watt, CFF V2, titanium, ac	00MX954	
3	Power supply, Artesyn, 750 Watt, CFF V2, titanium, ac	00YJ903	
3	Power supply, Artesyn, 750 Watt, CFF V2, platinum, ac	00YJ904	
3	Power supply, Artesyn, 900 Watt, CFF V2, platinum, ac	00YJ905	
3	Power supply, AcBel, 750 Watt, CFF V2, titanium, ac	00YJ946	
3	Power supply, Artesyn, 750 Watt, CFF V2, platinum, ac	00YL565	
3	Power supply, Artesyn, 900 Watt, CFF V2, platinum, ac	00YL567	
3	Power supply, Artesyn, 750 Watt, CFF V2, titanium, ac	00YL569	
3	Power supply, Artesyn, 750 Watt, CFF V2, titanium, ac	94Y8283	
3	Power supply, Artesyn, 750 Watt, CFF V2, platinum, ac	94Y8284	
3	Power supply, AcBel, 750 Watt, CFF V2, titanium, ac	94Y8292	
3	Power supply, Delta, 750 Watt, CFF V2, platinum, ac	94Y8297	
3	Power supply, Artesyn, 750 Watt, CFF V2, platinum, ac, w/240 V dc label	00YJ982	
3	Power supply, Artesyn, 900 Watt, CFF V2, platinum, ac, w/240 V dc label	00YJ983	
3	Power supply, Delta, 750 Watt, CFF V2, platinum, ac, w/240 V dc label	00YJ984	
3	Power supply, Delta, 900 Watt, CFF V2, platinum, ac, w/240 V dc label	00YJ985	
4	Heat sink		00KC912
4	Heat sink, low T case	00KC911	
5	Microprocessor, Intel E5-2609 v4, 1.7 GHz, 15 MB, 1866 MHz, 85 W (8-core) Addle microprocessor, Intel E5-2609 v4, 1.7 GHz, 15 MB, 1866 MHz, 85 W (8-core)		00MW782

Index	Description	CRU part number (Tier 1)	CRU part number (Tier 2)
5	Microprocessor, Intel E5-2620 v4, 2.1 GHz, 20 MB, 2133 MHz, 85 W (8-core) Addl microprocessor, Intel E5-2620 v4, 2.1 GHz, 20 MB, 2133 MHz, 85 W (8-core)		00YD975
5	Microprocessor, Intel E5-2630 v4, 2.2 GHz, 20 MB, 2133 MHz, 85 W (10-core) Addl microprocessor, Intel E5-2630 v4, 2.2 GHz, 20 MB, 2133 MHz, 85 W (10-core)		00YD974
5	Microprocessor, Intel E5-2650 v4, 2.2 GHz, 30 MB, 2400 MHz, 105 W (12-core) Addl microprocessor, Intel E5-2650 v4, 2.2 GHz, 30 MB, 2400 MHz, 105 W (12-core)		00YD972
5	Microprocessor, Intel E5-2680 v4, 2.4 GHz, 35 MB, 2400 MHz, 120 W (14-core) Addl microprocessor, Intel E5-2680 v4, 2.4 GHz, 35 MB, 2400 MHz, 120 W (14-core)		00YD970
5	Microprocessor, Intel E5-2697 v4, 2.3 GHz, 45 MB, 2400 MHz, 145 W (18-core) Addl microprocessor, Intel E5-2697 v4, 2.3GHz, 45 MB, 2400 MHz, 145 W (18-core)		00YD968
5	Microprocessor, Intel E5-2699 v4, 2.2 GHz, 55 MB, 2400 MHz, 145 W (22-core) Addl microprocessor, Intel E5-2699 v4, 2.2 GHz, 55 MB, 2400 MHz, 145 W (22-core)		00YD967
5	Processor, Intel Xeon E5-2698 v4 20C, 2.2 GHz, 50 MB, 2400 MHz, 135 W		00MW771
5	Processor, Intel Xeon E5-2667 v4 8C, 3.2 GHz, 25 MB, 2400 MHz, 135 W		00MW776
5	Processor, Intel Xeon E5-2643 v4 6C, 3.4 GHz, 20 MB, 2400 MHz, 135 W		00MW778
5	Processor, Intel Xeon E5-2690 v4 14C, 2.6 GHz, 35 MB, 2400 MHz, 135 W		00YD969
5	Processor, Intel Xeon E5-2697A v4 16C, 2.6 GHz, 40 MB, 2400 MHz, 145 W		00YK831
5	Processor, Intel Xeon E5-2699A v4 22C, 2.4 GHz, 55 MB, 2400 MHz, 145 W		01GT318
5	Processor, Intel Xeon E5-2699R v4 22C, 2.2 GHz, 55 MB, 2400 MHz, 145 W		01GT319
6	System board		00MV379
7	Memory, 16 GB, 2Rx4, 1.2 V, DDR4, 2400 MHz, RDIMM	46W0831	
7	Memory, 32 GB, 2Rx4, 1.2 V, DDR4, 2400 MHz, RDIMM	46W0835	
7	Memory, 64 GB, 4Rx4, 1.2 V, DDR4, 2400 MHz, LRDIMM	46W0843	
7	Memory, 16 GB TruDDR4, 2Rx8, 1.2 V, PC4-19200 CL17, 2400 MHz, LP RDIMM	01KN303	
8	PCIe Riser 1 assembly (1 x low-profile x16)	00KF624	

Index	Description	CRU part number (Tier 1)	CRU part number (Tier 2)
9	PCIe Riser 2 assembly (1 x low-profile x16; 1x full-height half-length x16)	00KF627	
11	LCD system information display panel	00D0464	
16	Hard disk drive, 2.5-inch hot-swap, nearline SATA, 1 TB, 7.2 K, 6 Gbps	00AJ142	
16	Hard disk drive, 2.5-inch hot-swap, nearline SATA, 2 TB, 7.2 K, 6 Gbps	00NA527	
16	Enterprise mainstream solid-state drive, 2.5-inch hot-swap, SATA, 480 GB	00YK213	
16	Enterprise mainstream solid-state drive, 2.5-inch hot-swap, SATA, 800 GB	00YK218	
16	Enterprise mainstream solid-state drive, 2.5-inch hot-swap, SATA, 1.2 TB	00YK223	
16	Enterprise mainstream solid-state drive, 2.5-inch hot-swap, SATA, 1.6 TB	00YK228	
16	Solid-state drive, 2.5-inch hot-swap, SAS, 400 GB	01GR601	
16	Solid-state drive, 2.5-inch hot-swap, SAS, 800 GB	01GR606	
16	Solid-state drive, 2.5-inch hot-swap, SAS, 1.6 TB	01GR611	
16	Self-encrypting drive, 2.5-inch hot-swap, SAS, 2 TB	01GR671	
16	Solid-state drive, enterprise entry, 2.5 inches, SATA G3HS, 1.92 TB	01GR712	
16	Solid-state drive, PM1633a, enterprise capacity, 2.5 inches, 12Gb SAS G3HS, 3.84 TB	01GR787	
16	Solid-state drive, 5100 enterprise mainstream, 2.5 inches, SATA G3HS, 240 GB	01GV844	
16	Solid-state drive, 5100 enterprise mainstream, 2.5 inches, SATA G3HS, 480 GB	01GV849	
16	Solid-state drive, 5100 enterprise mainstream, 2.5 inches, SATA G3HS, 960 GB	01GV854	
16	Solid-state drive, 5100 enterprise mainstream, 2.5 inches, SATA G3HS, 1.92 TB	01GV859	
16	Solid-state drive, 5100 enterprise mainstream, 2.5 inches, SATA G3HS, 3.84 TB	01GV864	
18	Backplane, four 2.5-inch hard disk drives	00FJ755	
21	SATADOM, 64 GB		00YK391
21	SATADOM, 64 GB		01GR782
22	SATADOM bracket		00YK454
22	SATADOM bracket		01GT057
23	Hot-swap fan	00KC909	
25	Air baffle, 2.5-inch hard-disk-drive model	00KF666	
	Adapter, Intel x520 dual-port 10GbE SFP+	49Y7962	

Index	Description	CRU part number (Tier 1)	CRU part number (Tier 2)
	Adapter, Intel X540-T2 dual-port 10GBase-T	49Y7972	
	Adapter, Intel X550-T2 dual-port 10GBase-T	00MM862	
	Adapter, Intel X710-DA2 2x10GbE SFP+	81Y3522	
	Adapter, N2215 SAS/SATA HBA	47C8676	
	SATADOM assembly kit		00YL949
	Alcohol wipes		00MP352
	Battery, 3.0 volt	33F8354	
	Battery holder	00KF677	
	Bracket, PCIe Riser 1, low-profile	00KF687	
	Bracket, PCIe Riser 2, 2 x low-profile	00KF688	
	Bracket, PCIe Riser 2, 1 x low-profile, 1x full-height half-length	00KF689	
	Cable, backplane, four 2.5-inch hot-swap hard disk drive	00KC960	
	Cable, external USB 3.0, 3 m	00MW395	
	Cable, hard disk drive, Mini-SAS, 730 mm	00KC952	
	Cable, hard disk drive, Mini-SAS, 570 mm	00KC953	
	Cable, hard disk drive, Mini-SAS, 570 mm, round angle	00KC954	
	Cable, Intel OPA 100 Series Passive Copper QSFP28 Cable, 0.5 m	00WE033	
	Cable, Intel OPA Passive Copper QSFP28 Cable, 0.75 m	00WE037	
	Cable, Intel OPA 100 Series Passive Copper QSFP28 Cable, 1 m	00WE041	
	Cable, Intel OPA 100 Series Passive Copper QSFP28 Cable, 1.25 m	00WE045	
	Cable, Intel OPA 100 Series Passive Copper QSFP28 Cable, 1.5 m	00WE049	
	Cable, Intel OPA 100 Series Passive Copper QSFP28 Cable, 2 m	00WE053	
	Cable, Intel OPA 100 Series Passive Copper QSFP28 Cable, 3 m	00WE057	
	Cable, Intel OPA 100 Series Active Optical QSFP28 Cable, 5 m	00WE061	
	Cable, Intel OPA 100 Series Active Optical QSFP28 Cable, 10 m	00WE065	
	Cable, Intel OPA 100 Series Active Optical QSFP28 Cable, 15 m	00WE069	
	Cable, Intel OPA 100 Series Active Optical QSFP28 Cable, 20 m	00WE073	
	Cable, LCD system information display panel	00MU415	
	Cable, Mini-SAS, 6 m	44X3322	
	Cable, Mini-SAS HD	00YL487	
	Cable, Mini-SAS HD, 570 mm	00YL819	
	Cable, optical drive, 480 mm	00KC958	
	Cable, power	00KC957	
	Cable, power, 10 A/100-250 V, 2.8 m	39M5377	

Index	Description	CRU part number (Tier 1)	CRU part number (Tier 2)
	Cable, power, 13 A/125-10 A/250 V, 2.8 m	39M5509	
	Cable, power, 10 A/100-250 V, C13 to IEC 320-C14, 1.5 m	39M5375	
	Cable, power, 10 A/100-250 V, C13 to IEC 320-C14, 4.3 m	39M5378	
	Cable, power, 10 A/100-250 V, C13 to IEC 320-C20, 2.8 m	39M5392	
	Cable, power, 125-250 V, C13 to IEC 320-C14 (WW), 2.0 m	39M5508	
	Cable, SAS, 1 m	39R6530	
	Cable, SAS, 3 m	39R6532	
	Cable, SATADOM		00YJ437
	Cable, USB conversion	39M2909	
	Cable, video	00KC963	
	Cable, VGA	00KG408	
	Cable, COM port	00KC965	
	Cable, UMIQ-V2	00AK143	
	Cable, passive DAC SFP+, 1.5 m	00AY762	
	Cable, passive DAC SFP+, 2 m	00AY763	
	Cable, passive DAC SFP+, 7 m	00D6150	
	Cable, passive DAC SFP+, 0.5 m	00D6289	
	Cable, blue, Cat5e, 0.6 m	40K8966	
	Cable, blue, Cat5e, 1.5 m	40K8967	
	Cable, blue, Cat5e, 3 m	40K8968	
	Cable, blue, Cat5e, 10 m	40K8969	
	Cable, blue, Cat5e, 25 m	40K8970	
	Cable, yellow, Cat5e, 0.6 m	40K8971	
	Cable, yellow, Cat5e, 1.5 m	40K8972	
	Cable, yellow, Cat5e, 3 m	40K8973	
	Cable, yellow, Cat5e, 10 m	40K8974	
	Cable, yellow, Cat5e, 25 m	40K8975	
	Cable, green, Cat5e, 0.6 m	40K8976	
	Cable, green, Cat5e, 1.5 m	40K8977	
	Cable, green, Cat5e, 3 m	40K8978	
	Cable, green, Cat5e, 10 m	40K8979	
	Cable, green, Cat5e, 25 m	40K8980	
	Cable, black, Cat5e, 350 mm	41Y9299	
	Cable, blue, Cat6, 3 m	90Y3732	

Index	Description	CRU part number (Tier 1)	CRU part number (Tier 2)
	Cable, blue, Cat6, 10 m	90Y3734	
	Cable, blue, Cat6, 25 m	90Y3735	
	Cable, passive, DAC SFP+, 1 m	90Y9426	
	Cable, passive, DAC SFP+, 3 m	90Y9429	
	Cable, passive, DAC SFP+, 5 m	90Y9432	
	Cage, PCIe Riser 3	00KF691	
	CMA kit, 1U	00KA595	
	DPI Universal 7 C13 PDU	39Y8914	
	Keyboard, USB, US English 103P	00AL883	
	Keyboard, USB, US English 103P, with pointing device	00MW364	
	Miscellaneous parts kit	00KF685	
	Mouse, USB, optical wheel, black	00MW370	
	Operator information panel, 2.5-inch hard-disk-drive model	00KF673	
	Slide rail kit, universal, Gen-II	00KA593	
	Transceiver, QSFP+ 40GBASE-SR4	49Y7928	
	Broadwell Planar for ThinkAgile SXM, supporting V4 CPU		01PE217
	Broadwell Planar, supporting V4 CPU		01GT444
	Broadwell Planar, supporting V4 CPU		01KN187
	EIA nameplate	00YK489	
	8693 SSL label	01GT638	
	Simple front IO for 8x2.5"	01PE007	
	8x2.5" front IO cage	01PE008	
	Line cord, 10 A/250 V, C13 to IRAM 2073 (Argentina), 2.8 m	39M5068	
	Line cord, 10 A/125 V, C13 to NEMA 5-15P (US), 4.3 m	39M5076	
	Line cord, 10 A/125 V, C13 to NEMA 5-15P (US), 1.8 m	39M5080	
	Line cord, 10 A/120 V, C13 to NEMA 5-15P (US), 2.8 m	39M5081	
	Line cord, 10 A/250 V, C13 to NEMA 6-15P (US), 1.8 m	39M5094	
	Line cord, 10 A/250 V, C13 to NEMA 6-15P (US), 2.8 m	39M5095	
	Line cord, 10 A/250 V, C13 to AS/NZ 3112 (Australia/NZ), 2.8 m	39M5102	
	Line cord, 10 A/250 V, C13 2P+Gnd (Europe), 4.3 m	39M5121	
	Line cord, 10 A/230 V, C13 to CEE7-VII (Europe), 2.8 m	39M5123	
	Line cord, 10 A/250 V, C13 to DK2-5a (Denmark), 2.8 m	39M5130	
	Line cord, 10 A/250 V, C13 to SABS 164 (S Africa), 2.8 m	39M5144	
	Line cord, 10 A/250 V, C13 to BS 1363/A (UK), 2.8 m	39M5151	

Index	Description	CRU part number (Tier 1)	CRU part number (Tier 2)
	Line cord, 10 A/250 V, C13 to SEV 1011-S24507 (Swiss), 2.8 m	39M5158	
	Line cord, 220-240 V, C13 to CEI 23-16 (Italy/Chile), 2.8 m	39M5165	
	Line cord, 10 A/250 V, C13 to SI 32 (Israel), 2.8 m	39M5172	
	Line cord, 10 A/230 V, C13 to IEC 309 P+N+G (Den/Sws), 2.8 m	39M5179	
	Line cord, 12 A/125 V, C13 to JIS C-8303 (Japan), 2.8 m	39M5199	
	Line cord, 220-240 V, C13 to GB 2099.1 (China), 2.8 m	39M5206	
	Line cord, 220-240 V, C13 to KETI (S Korea), 2.8 m	39M5219	
	Line cord, 10 A/250 V, C13 2P+Gnd (India), 2.8 m	39M5226	
	Line cord, 10 A/125 V, C13 2P+Gnd (Brazil), 1.8 m	39M5239	
	Line cord, 10 A/250 V, C13 to NBR 14136 (Brazil), 2.8 m	39M5240	
	Line cord, 10 A/125 V, C13 to CNS 10917-3 (Taiwan), 1.8 m	39M5246	
	Line cord, 10 A/125 V, C13 to CNS 10917-3 (Taiwan), 2.8 m	39M5247	
	Line cord, 10 A/250 V, C13 to CNS 10917-3 (Taiwan), 2.8 m	39M5254	
	M3x5 mounting screw	42C3933	
	Advanced FIO	01KP789	
	Standard FIO	01KP790	

Consumable parts (parts that are purchased separately) are not covered by the Lenovo Statement of Limited Warranty. The following consumable parts are available for purchase from the Lenovo retail store.

Index	Description	Part number
20	SATADOM holder	00YJ758
24	Filler, fan	00MV380
	Alcohol wipes	59P4739
	Bracket, left EIA	00MV382
	Bracket, right EIA	01GV222
	Cover, rear USB	00YJ757
	CPU installation / removal tool	00YJ766
	Friction rail	00MV390
	Thermal grease	41Y9292
	Battery cover	00YJ758

Structural parts

Structural parts are not covered by the Lenovo Statement of Limited Warranty. The following structural parts are available for purchase from the retail store.

Table 21. Structural parts, Type 8869

Index	Description	Part number
1	Top cover	00KF667
2	Power supply filler	94Y7610
10	Chassis, eight 2.5-inch hard disk drives	00KF663
15	Filler, DVD drive	00KF416
17	Filler, 2.5-inch hard disk drive bay	00FW856
19	Battery holder	00KF677
	Bracket, four 2.5-inch backplane	00KF692
	G4 slide kit	00KA592

To order a structural part, complete the following steps:

1. Go to http://www.ibm.com.
2. From the **Products** menu, select **Upgrades, accessories & parts**.
3. Click **Obtain maintenance parts**; then, follow the instructions to order the part from the retail store.

Note: Changes are made periodically to the Lenovo Web site. The actual procedure might vary slightly from what is described in this document.

If you need help with your order, call the toll-free number that is listed on the retail parts page, or contact your local Lenovo representative for assistance.

Power cords

For your safety, a power cord with a grounded attachment plug is provided to use with this product. To avoid electrical shock, always use the power cord and plug with a properly grounded outlet.

Power cords for this product that are used in the United States and Canada are listed by Underwriter's Laboratories (UL) and certified by the Canadian Standards Association (CSA).

For units intended to be operated at 115 volts: Use a UL-listed and CSA-certified cord set consisting of a minimum 18 AWG for system input rating below 10 A or 16 AWG when over 10 A, Type SVT or SJT, three-conductor cord, a maximum of 15 feet in length and a parallel blade, grounding-type attachment plug rated 15 amperes, 125 volts.

For units intended to be operated at 230 volts (U.S. use): Use a UL-listed and CSA-certified cord set consisting of a minimum 18 AWG, Type SVT or SJT, three-conductor cord, a maximum of 15 feet in length and a tandem blade, grounding-type attachment plug rated 15 amperes, 250 volts.

For units intended to be operated at 230 volts (outside the U.S.): Use a cord set with a grounding-type attachment plug. The cord set should have the appropriate safety approvals for the country in which the equipment will be installed.

Power cords for a specific country or region are usually available only in that country or region.

Power cord part number	Used in these countries and regions
39M5206	China
39M5102	Australia, Fiji, Kiribati, Nauru, New Zealand, Papua New Guinea
39M5123	Afghanistan, Albania, Algeria, Andorra, Angola, Armenia, Austria, Azerbaijan, Belarus, Belgium, Benin, Bosnia and Herzegovina, Bulgaria, Burkina Faso, Burundi, Cambodia, Cameroon, Cape Verde, Central African Republic, Chad, Comoros, Congo (Democratic Republic of), Congo (Republic of), Cote D'Ivoire (Ivory Coast), Croatia (Republic of), Czech Republic, Dahomey, Djibouti, Egypt, Equatorial Guinea, Eritrea, Estonia, Ethiopia, Finland, France, French Guyana, French Polynesia, Germany, Greece, Guadeloupe, Guinea, Guinea Bissau, Hungary, Iceland, Indonesia, Iran, Kazakhstan, Kyrgyzstan, Laos (People's Democratic Republic of), Latvia, Lebanon, Lithuania, Luxembourg, Macedonia (former Yugoslav Republic of), Madagascar, Mali, Martinique, Mauritania, Mauritius, Mayotte, Moldova (Republic of), Monaco, Mongolia, Morocco, Mozambique, Netherlands, New Caledonia, Niger, Norway, Poland, Portugal, Reunion, Romania, Russian Federation, Rwanda, Sao Tome and Principe, Saudi Arabia, Senegal, Serbia, Slovakia, Slovenia (Republic of), Somalia, Spain, Suriname, Sweden, Syrian Arab Republic, Tajikistan, Tahiti, Togo, Tunisia, Turkey, Turkmenistan, Ukraine, Upper Volta, Uzbekistan, Vanuatu, Vietnam, Wallis and Futuna, Yugoslavia (Federal Republic of), Zaire
39M5130	Denmark
39M5144	Bangladesh, Lesotho, Macao, Maldives, Namibia, Nepal, Pakistan, Samoa, South Africa, Sri Lanka, Swaziland, Uganda
39M5151	Abu Dhabi, Bahrain, Botswana, Brunei Darussalam, Channel Islands, China (Hong Kong S.A.R.), Cyprus, Dominica, Gambia, Ghana, Grenada, Iraq, Ireland, Jordan, Kenya, Kuwait, Liberia, Malawi, Malaysia, Malta, Myanmar (Burma), Nigeria, Oman, Polynesia, Qatar, Saint Kitts and Nevis, Saint Lucia, Saint Vincent and the Grenadines, Seychelles, Sierra Leone, Singapore, Sudan, Tanzania (United Republic of), Trinidad and Tobago, United Arab Emirates (Dubai), United Kingdom, Yemen, Zambia, Zimbabwe
39M5158	Liechtenstein, Switzerland
39M5165	Chile, Italy, Libyan Arab Jamahiriya
39M5172	Israel
39M5095	220 - 240 V Antigua and Barbuda, Aruba, Bahamas, Barbados, Belize, Bermuda, Bolivia, Caicos Islands, Canada, Cayman Islands, Colombia, Costa Rica, Cuba, Dominican Republic, Ecuador, El Salvador, Guam, Guatemala, Haiti, Honduras, Jamaica, Mexico, Micronesia (Federal States of), Netherlands Antilles, Nicaragua, Panama, Peru, Philippines, Saudi Arabia, Thailand, Taiwan, United States of America, Venezuela
39M5081	110 - 120 V Antigua and Barbuda, Aruba, Bahamas, Barbados, Belize, Bermuda, Bolivia, Caicos Islands, Canada, Cayman Islands, Colombia, Costa Rica, Cuba, Dominican Republic, Ecuador, El Salvador, Guam, Guatemala, Haiti, Honduras, Jamaica, Mexico, Micronesia (Federal States of), Netherlands Antilles, Nicaragua, Panama, Peru, Philippines, Saudi Arabia, Thailand, Taiwan, United States of America, Venezuela
39M5219	Korea (Democratic People's Republic of), Korea (Republic of)
39M5199	Japan
39M5068	Argentina, Paraguay, Uruguay

Power cord part number	Used in these countries and regions
39M5226	India
39M5240	Brazil

Chapter 5. Removing and replacing components

This chapter contains the detailed procedures for replacing hardware components in the Lenovo Converged HX Series appliances.

There are four types of replaceable components.

- **Structural parts:** Purchase and replacement of structural parts (components, such as chassis assembly, and top cover) is your responsibility. If Lenovo acquires or installs a structural component at your request, you will be charged for the service.
- **Consumable parts:** Purchase and replacement of consumable parts is your responsibility. If Lenovo acquires or installs a consumable component at your request, you will be charged for the service.
- **Tier 1 customer replaceable unit (CRU):** Replacement of Tier 1 CRUs is your responsibility. If Lenovo installs a Tier 1 CRU at your request, you will be charged for the installation.
- **Tier 2 customer replaceable unit:** You may install a Tier 2 CRU yourself or request Lenovo to install it, at no additional charge, under the type of warranty service that is designated for your server.

See Chapter 4 “Parts listing, Lenovo Converged HX Series Type 8693” on page 89 to determine whether a component is a structural part, consumable part, Tier 1 CRU, or Tier 2 CRU.

For information about the terms of the warranty, see the *Safety, Support, and Warranty Information* document that comes with the server.

For more information about getting service and assistance, see Appendix D “Getting help and technical assistance” on page 885.

High-level procedures for replacing components

Because the Lenovo Converged HX Series appliances are a combination of both software and hardware, it is important to follow the instructions in this section for changing any of the major hardware components.

Except for hot-swap components such as drives, fans, and power supplies, it is necessary to remove the appliance from the cluster and cleanly shutdown the hypervisor before changing the hardware. After replacing the hardware component the server and hypervisor can be restarted. For hardware it may be necessary to update the firmware configuration.

See also the Nutanix Hardware Replacement Documentation and Field Installation Guide.

Replacing a front HDD/SSD

Each Lenovo Converged HX Series appliance contains solid-state drives (SSDs) and hard disk drives (HDDs). User data is striped across these drives, so they are referred to as “data drives”. While a node might be able to self-correct for a data drive failure, it does lead to system degradation. You should replace failed data drives as soon as possible. The indications of a failed data drive are:

- The Prism web console displays a disk alert.
- The red LED on the front of a drive carrier is illuminated.

© Copyright Lenovo 2016, 2023

Figure 24. S3610 Enterprise performance SATA SSD in a 2.5-inch hot-swap form factor

To replace an SSD or HDD in the front of the appliance, perform the following steps:

1. To identify and prepare for replacing a failed data drive, use the Data Drive Failure procedure in the Nutanix Hardware Replacement Documentation.
2. During the process, replace the hot swap drive as described in "Replacing hot-swap hard disk drives" on page 119.
3. Bring the data drive online by using the Completing Drive Replacement procedure in the Nutanix Hardware Replacement Documentation.

Replacing a power supply unit (PSU)

The Lenovo Converged HX Series appliances use two power supply units. If you are using 208V input power, the two power supplies are redundant. One power supply can meet the needs of the node. Although losing one of the two power supplies does not impact the operation of a node, you should replace a failed power supply unit as soon as possible to restore redundancy.

The indications of a failed power supply unit are:

- Orange warning LED on node front panel is on.
- Lenovo XClarity Administrator shows a power supply alert.
- Nutanix Prism web console shows a power supply alert.
- If using VMware ESXi, the vSphere client Hardware Status tab shows a power supply alert.

To replace a power supply unit, perform the following steps:

1. The Lenovo Converged HX Series appliances contain two power supplies. Identify the failed power supply by checking in Prism, XClarity Administrator or the indicator lights on the power supply units.
2. Disconnect the power cable for the power supply to be replaced being careful not to dislodge the other power cable.
3. Remove the power supply as described in "Removing a hot-swap ac power supply" on page 138.
4. Replace the power supply as described in "Replacing a hot-swap ac power supply" on page 139.
5. Reconnect the power cable.
6. Verify that the power supply has been successfully replaced by checking the following:
   - Orange warning light on the server front panel is extinguished.
   - Verify indicator lights on the power supply (two green LEDs).

- No error shown in Lenovo XClarity Administrator
- No error shown in Prism

Replacing a chassis fan

Failed or failing chassis fans can cause the system to overheat and shut down. You should replace a failed chassis fan as soon as possible. The indications of a failed chassis fan include:

- An error in Lenovo XClarity Administrator
- An error in the Prism web console

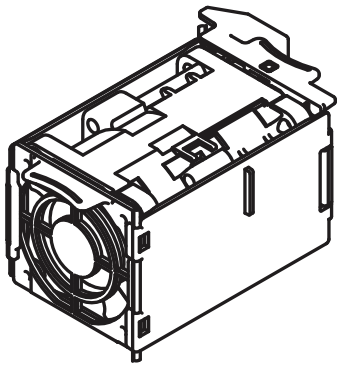

Figure 25. Fan

To replace a chassis fan, perform the following steps:

1. It is possible to replace the chassis fan while the system is powered on providing that the cable management arm is in place by pulling the node chassis out of the rack.
2. Remove the top cover as described in "Removing the cover" on page 112.
3. Replace the chassis fan with the error LED on as described in "Replacing a thermal kit (hot-swap fan)" on page 136.
4. Replace the top cover as described in "Replacing the cover" on page 113.
5. Push node chassis back into the rack.
6. Verify that the chassis fan has been successfully replaced by checking the following:
   - Error LED for the replaced fan is off.
   - Orange warning light on the node front panel is extinguished.
   - No error shown in Lenovo XClarity Administrator.
   - No error shown in Prism.

Replacing a network interface card (NIC)

The Lenovo Converged HX Series appliances can support up to eight network ports: two or four 10 GbE ports (up to 2 NICs) and four 1 GbE ports on the system board. A node requires network connectivity to function as part of a cluster. If one network interface is available, the failure of the other network interfaces does not cause service interruption but may cause service degradation.

The indications of a failed NIC include:

- No LED is illuminated for the network interface.
- Guest VM performance degrades.
- Guest VMs, the Nutanix web console, and oneCLI are unavailable.

- VM migration fails with an error message such as the following:
  `The migration was cancelled because the amount of changing memory for the VM was greater than the available network bandwidth`

Figure 26. Intel X520 dual port 10GbE SFP+ adapter

To replace a NIC, perform the following steps:

1. The Lenovo Converged HX Series appliances contain one or two NICs. For nodes with two NICs, ensure you verify which one has failed. Identify the failed NIC by either checking in XClarity Administrator or checking the indicator lights on the network ports.
2. Shut down the node by following the hypervisor specific Node Shutdown procedure described in the Nutanix Hardware Replacement Documentation.
3. Power off the node and disconnect all the cables if the cable management arm is not in place. Pull the node chassis out of the rack.
4. Remove the top cover as described in "Removing the cover" on page 112.
5. Replace the first (and sometimes only) NIC as described in "Replacing an adapter" on page 133.
6. Replace the top cover as described in "Replacing the cover" on page 113.
7. Push the node chassis back into the rack and reconnect the cables as necessary. Power on the node.
8. Start the node by following the hypervisor specific Node Start procedure described in the Nutanix Hardware Replacement Documentation.
9. Verify that the NIC has been successfully replaced by checking the following:
   - Orange warning light on the node front panel is extinguished.
   - All network ports are again fully functional.

Replacing a host bus adapter (HBA)

While a node may be able to self-correct for other adapter card errors, a failed HBA can lead to system degradation and should be addressed as soon as possible.

The indications of a failed HBA card include:

- If using VMware ESXi, vCenter Alarms or Hardware Status shows an alert.

- The Prism web console shows a message similar to LSI HBA card not detected.
- Slow disk performance or slow system performance.
- The hypervisor cannot detect SSDs and HDDs or the red LEDs on the drives are illuminated.
- The CVM won't start because no storage controller resources are detected.
- The hypervisor or BIOS does not detect the HBA card.

Figure 27. N2215 SAS/SATA HBA

To replace an HBA card, perform the following steps:

1. Identify the failed HBA by either checking in XClarity Administrator or using the IMM web console to browse the post event log. The event log will contain information about the location of the failed HBA adapter.
2. Shut down the node by following the hypervisor specific Node Shutdown procedure described in the Nutanix Hardware Replacement Documentation.
3. Power off the node and disconnect all the cables if the cable management arm is not in place. Pull the node chassis out of the rack.
4. Remove the top cover as described in "Removing the cover" on page 112.
5. Replace the failed HBA adapter using the procedure described in "Removing the dedicated slotless HBA controller" on page 131.
6. Replace the top cover as described in "Replacing the cover" on page 113.
7. Push the node chassis back into the rack and reconnect the cables as necessary. Power on the node.
8. It is possible that the CRU shipped to you has an earlier version of the firmware such as 1.04.04 which should not be used in the Lenovo Converged HX Series appliances. You must use Lenovo XClarity Administrator or the Lenovo ToolsCenter Bootable Media Creator to update the firmware for the N2215 HBA to version 1.11.125 or later.
9. Verify that the HBA has been successfully replaced by checking the following:
   - Orange warning light on the server is extinguished.
   - If the controller VM starts and all of the drives are shown as online

- If the Controller VM does not boot, you can verify if the LSI HBA card is detected using the lspci command:
  ```
  root@host lspci | grep -i SAS3008
  sas0000:82:00.0 Mass storage controller: LSI Logic / Symbios Logic SAS3008 PCI-Express Fusion-MPT
  SAS-3
  ```

  If the LSI HBA card is not present, ensure that the card is properly connected. If the card is still not detected, contact Lenovo support.

  If the system fails to boot from the boot drive after replacing the HBA, verify that the option ROM is turned off for the HBA adapter using the procedure in the Legacy Support section in "Setup Utility menu choices" on page 32.

10. Start the node by following the hypervisor specific Node Start procedure described in the Nutanix Hardware Replacement Documentation.

Replacing a memory DIMM

While a node might be able to self-correct for certain memory errors, failed memory can lead to system degradation. Failed memory should be replaced as soon as possible. The indications of a failed DIMM are:

- A post error on boot
- An error in Lenovo XClarity Administrator
- An error in the Prism web console
- Not all memory is detected. For example, the appliance should have 256 GB per node and the host only shows 240 GB.

Here are the steps for replacing a memory DIMM:

1. Identify the failed DIMM by either checking in XClarity Administrator or using the IMM web console to browse the post event log. The event log will contain information about the location of the DIMM fault.
2. Shut down the node by following the hypervisor specific Node Shutdown procedure described in the Nutanix Hardware Replacement Documentation.
3. Power off the node and disconnect all the cables if the cable management arm is not in place. Pull the node chassis out of the rack.
4. Remove the top cover as described in "Removing the cover" on page 112.
5. Remove the air baffle as described in "Removing the air baffle" on page 114.
6. Replace the memory DIMM as described in "Replacing a memory module" on page 127.
7. Replace the air baffle as described in "Replacing the air baffle" on page 115.
8. Replace the top cover as described in "Replacing the cover" on page 113.
9. Push the node chassis back into the rack and reconnect the cables as necessary. Power on the node.
10. Start the node by following the hypervisor specific Node Start procedure described in the Nutanix Hardware Replacement Documentation.
11. Verify that the DIMM memory failure is resolved by checking the following:
    - No error in the post event log.
    - No error shown in Lenovo XClarity Administrator.
    - No error shown in Prism.

Replacing a microprocessor

The Lenovo Converged HX Series appliances contain two Intel E5-2600 v4 (“Broadwell”) microprocessors. Lenovo support may instruct you that a microprocessor needs to be replaced. This is a level 2 CRU and should be performed by a trained Lenovo field representative.

To replace a microprocessor, perform the following steps:

1. Make sure you know which microprocessor is to be replaced. You can identify the failed microprocessor by either checking in XClarity Administrator or the POST error log on the IMM console.
2. Shut down the node by following the hypervisor specific Node Shutdown procedure described in the Nutanix Hardware Replacement Documentation.
3. Power off the node, disconnect all cables, and remove the node from the rack.
4. Remove the top cover as described in “Removing the cover” on page 112.
5. Remove the air baffle as described in “Removing the air baffle” on page 114.
6. Replace the microprocessor as described in the “For service technician only: removing a microprocessor and heat sink” on page 162.
7. Replace the air baffle as described in “Replacing the air baffle” on page 115.
8. Replace the top cover as described in “Replacing the cover” on page 113.
9. Return the node to the rack, reconnect the cables as necessary and power on the node.
10. Start the node by following the hypervisor specific Node Start procedure described in the Nutanix Hardware Replacement Documentation.
11. Verify that the microprocessor has been successfully replaced by checking the following:
    - Orange warning light on the node front panel is extinguished.
    - Post error log in the IMM

Replacing the system board

Lenovo support may instruct you that the system board needs to be replaced. This is a level 2 CRU and should be performed by a trained Lenovo field representative.

To replace the system board, perform the following steps:

1. Shut down the node by following the hypervisor specific Node Shutdown procedure described in the Nutanix Hardware Replacement Documentation.
2. Power off the node, disconnect all cables to the node, and remove the node from the rack as necessary.
3. Remove the top cover as described in “Removing the cover” on page 112.
4. Remove the system board as described in “For service technician only: removing the system board” on page 174.
5. Replace the system board as described in “For service technician only: replacing the system board” on page 176.
6. Replace the top cover as described in “Replacing the cover” on page 113.
7. Return the node to the rack and reconnect the cables as necessary. Power on the node.
8. Verify that the system board has been successfully replaced by checking the following:
    - Orange warning light on the node front panel is extinguished.
    - System boots successfully with no POST errors or other errors.
9. Stop the startup process at the main IMM menu screen to configure the new system board as a Lenovo Converged HX appliance using the following procedures in “Configuring the HX Series appliance” on page 45 of this document:

- Update the server VPD data
- Legacy boot mode
- Disable option ROMs
- BIOS optimization settings
- Modify boot options

10. Save the settings and boot into the hypervisor.
11. Start the node by following the hypervisor specific Node Start procedure described in the Nutanix Hardware Replacement Documentation.

Replacing the SATADOM boot drive

Lenovo support may instruct you that the SATADOM boot drive needs to be replaced. This is a level 2 CRU and should be performed by a trained Lenovo field representative.

To replace the SATADOM, perform the following steps:

1. Shut down the node by following the hypervisor specific Node Shutdown procedure described in the Nutanix Hardware Replacement Documentation.
2. Remove the SATADOM boot drive as described in "For service technician only: removing the SATADOM" on page 179.
3. Replace the SATADOM boot drive as described in "For service technician only: replacing the SATADOM" on page 180.
4. Replace the system board as described in "For service technician only: replacing the system board" on page 176.
5. Return the node to the rack and reconnect the cables as necessary. Power on the node.
6. Verify that the boot drive has been successfully replaced by checking the following:
7. Stop the startup process at the main IMM menu screen to configure the boot SSD for the Lenovo Converged HX Series appliances:
   - Configure boot drive virtual drives
   - Select virtual drive for booting
8. Use the Phoenix installer to reinstall the hypervisor and CVM by following the Imaging a Node procedure in the appendix of the Nutanix Field Installation Guide.

Installation guidelines

Use this information for installation.

Attention: Static electricity that is released to internal server components when the server is powered-on might cause the system to halt, which might result in the loss of data. To avoid this potential problem, always use an electrostatic-discharge wrist strap or other grounding system when removing or installing a hot-swap device.

Before you install optional devices, read the following information:

- Read the safety information in "Safety" on page v, the guidelines in "Working inside the server with the power on" on page 110, and "Handling static-sensitive devices" on page 110. This information will help you work safely.
- Make sure that the devices that you are installing are supported. For a list of supported optional devices for the server, see http://www.lenovo.com/ serverproven/.

- When you install your new server, take the opportunity to download and apply the most recent firmware updates. This step will help to ensure that any known issues are addressed and that your server is ready to function at maximum levels of performance. To download firmware updates for your server, go to http://www.ibm.com/support/ fixcentral.

  Important: Some cluster solutions require specific code levels or coordinated code updates. If the device is part of a cluster solution, verify that the latest level of code is supported for the cluster solution before you update the code.

  For additional information about tools for updating, managing, and deploying firmware, see the ToolsCenter for System x and BladeCenter at http://publib.boulder.ibm.com/infocenter/toolsctr/v1r0/.
- Before you install optional hardware, make sure that the server is working correctly. Start the server, and make sure that the operating system starts, if an operating system is installed, or that a 19990305 error code is displayed, indicating that an operating system was not found but the server is otherwise working correctly. If the server is not working correctly, see "Running the DSA Preboot diagnostic programs" on page 61 for information about how to run diagnostics.
- Observe good housekeeping in the area where you are working. Place removed covers and other parts in a safe place.
- Do not attempt to lift an object that you think is too heavy for you. If you have to lift a heavy object, observe the following precautions:
  - Make sure that you can stand safely without slipping.
  - Distribute the weight of the object equally between your feet.
  - Use a slow lifting force. Never move suddenly or twist when you lift a heavy object.
  - To avoid straining the muscles in your back, lift by standing or by pushing up with your leg muscles.
- Make sure that you have an adequate number of properly grounded electrical outlets for the server, monitor, and other devices.
- Back up all important data before you make changes to disk drives.
- Have a small flat-blade screwdriver, a small Phillips screwdriver, and a T8 torx screwdriver available.
- To view the error LEDs on the system board and internal components, leave the server connected to power.
- You do not have to turn off the server to install or replace hot-swap power supplies, hot-swap fans, or hot-plug Universal Serial Bus (USB) devices. However, you must turn off the server before you perform any steps that involve removing or installing adapter cables and you must disconnect the power source from the server before you perform any steps that involve removing or installing a riser card.
- Blue on a component indicates touch points, where you can grip the component to remove it from or install it in the server, open or close a latch, and so on.
- Orange on a component or an orange label on or near a component indicates that the component can be hot-swapped, which means that if the server and operating system support hot-swap capability, you can remove or install the component while the server is running. (Orange can also indicate touch points on hot-swap components.) See the instructions for removing or installing a specific hot-swap component for any additional procedures that you might have to perform before you remove or install the component.
- When you are finished working on the server, reinstall all safety shields, guards, labels, and ground wires.

System reliability guidelines

To help ensure proper system cooling and system reliability, make sure that the following requirements are met.

- Each of the drive bays has a drive or a filler panel and electromagnetic compatibility (EMC) shield installed in it.

- Each of the power-supply bays has a power supply or a filler installed in it.
- If the server has redundant power, each of the power-supply bays has a power supply installed in it.
- There is adequate space around the server to allow the server cooling system to work properly. Leave approximately 50 mm (2.0 inches) of open space around the front and rear of the server. Do not place objects in front of the fans. For proper cooling and airflow, replace the server cover before you turn on the server. Operating the server for extended periods of time (more than 30 minutes) with the server cover removed might damage server components.
- You have followed the cabling instructions that come with optional adapters.
- You have replaced a failing fan as soon as you remove the old one.
- You have replaced a hot-swap drive within two minutes of removal.
- You have replaced a failed hot-swap power supply within two minutes of removal.
- You do not operate the server without the air baffle installed. Operating the server without the air baffle might cause the microprocessor to overheat.
- Microprocessor socket 2 always contains either a socket cover or a microprocessor and heat sink.
- You have installed the fan 6 and fan 8 when you installed the second microprocessor option.

Working inside the server with the power on

Use this information when working inside the server with the power on.

Attention: Static electricity that is released to internal server components when the server is powered-on might cause the server to halt, which might result in the loss of data. To avoid this potential problem, always use an electrostatic-discharge wrist strap or other grounding system when you work inside the server with the power on.

You might have to have the server turned on while the cover is off, to look at light path diagnostics LEDs or replace hot swap components. Follow these guidelines when you work inside a server that is turned on:

- Avoid wearing loose-fitting clothing on your forearms. Button long-sleeved shirts before working inside the server; do not wear cuff links while you are working inside the server.
- Do not allow your necktie or scarf to hang inside the server.
- Remove jewelry, such as bracelets, necklaces, rings, and loose-fitting wrist watches.
- Remove items from your shirt pocket, such as pens and pencils, that could fall into the server as you lean over it.
- Avoid dropping any metallic objects, such as paper clips, hairpins, and screws, into the server.

Handling static-sensitive devices

Use this information to handle static-sensitive devices.

Attention: Static electricity can damage the server and other electronic devices. To avoid damage, keep static-sensitive devices in their static-protective packages until you are ready to install them.

To reduce the possibility of damage from electrostatic discharge, observe the following precautions:

- Limit your movement. Movement can cause static electricity to build up around you.
- The use of a grounding system is recommended. For example, wear an electrostatic-discharge wrist strap, if one is available. Always use an electrostatic-discharge wrist strap or other grounding system when working inside the server with the power on.
- Handle the device carefully, holding it by its edges or its frame.
- Do not touch solder joints, pins, or exposed circuitry.

- Do not leave the device where others can handle and damage it.
- While the device is still in its static-protective package, touch it to an unpainted metal surface on the outside of the server for at least two seconds. This drains static electricity from the package and from your body.
- Remove the device from its package and install it directly into the server without setting down the device. If it is necessary to set down the device, put it back into its static-protective package. Do not place the device on the server cover or on a metal surface.
- Take additional care when handling devices during cold weather. Heating reduces indoor humidity and increases static electricity.

Updating the server configuration

When you start the server for the first time after you add or remove a device, you might receive a message that the configuration has changed. The Setup Utility starts automatically so that you can save the new configuration settings.

Some optional devices have device drivers that you must install. For information about installing device drivers, see the documentation that comes with each device.

For information about configuring the integrated Gigabit Ethernet controller, see "Configuring the Ethernet controller" on page 39.

Sending DSA data to Lenovo

You can send DSA data to Lenovo with standard upload, standard upload with the system serial number, secure upload, and secure upload with the system serial number.

Before you send diagnostic data to Lenovo, read the terms of use at http://www.ibm.com/de/support/ ecurep/terms.html.

You can use any of the following methods to send diagnostic data to Lenovo:

- **Standard upload**:

  http://www.ibm.com/de/support/ ecurep/send_http.html
- **Standard upload with the system serial number**:

  http://www.ecurep.ibm.com/app/ upload_hw
- **Secure upload**:

  http://www.ibm.com/de/support/ ecurep/send_http.html#secure
- **Secure upload with the system serial number**:

  https://www.ecurep.ibm.com/ app/upload_hw

Returning a device or component

If you are instructed to return a device or component, follow all packaging instructions, and use any packaging materials for shipping that are supplied to you.

Removing and replacing server components

This section provides information for removing and replacing components in the server.

Removing and replacing consumable and structural parts

Replacement of consumable and structural parts is your responsibility. If Lenovo installs a consumable and structural part at your request, you will be charged for the installation.

The illustrations in this document might differ slightly from your hardware.

Removing the cover

Use this information to remove the cover.

To remove the server cover, complete the following steps:

Step 1. Read the safety information that begins on "Safety" on page v and "Installation guidelines" on page 108.

Step 2. Turn off the server and peripheral devices and disconnect the power cords and all external cables, if necessary.

Note: If you need to view any LEDs on the system board or front panel, ensure that you view the LEDs before disconnect the power cords.

Step 3. If the server has been installed in a rack, slide the server out from the rack enclosure.

Step 4. Remember to check if the cover is locked. If it is locked, unlock the cover first.

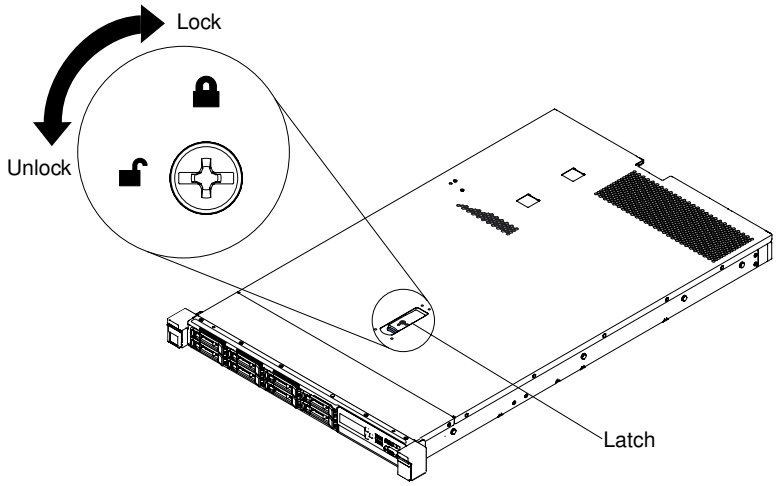

Figure 28. Unlocking the cover

Step 5. Press the blue tab on the cover-release latch and lift up the cover-release latch. Then, slide the cover to the rear.

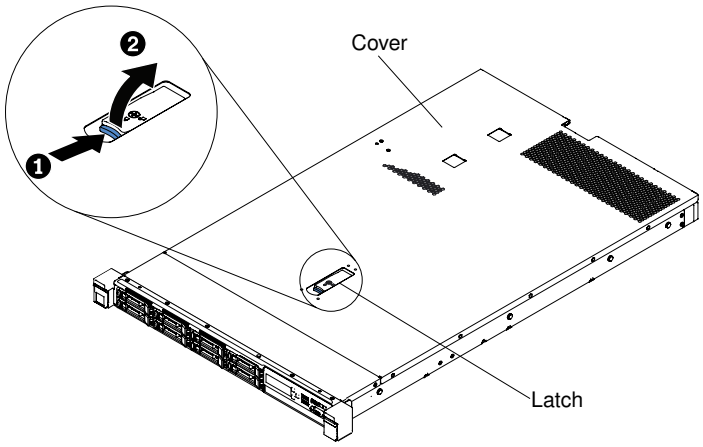

Figure 29. Cover removal

Step 6. Lift the server cover off the server and set it aside.

Attention: For proper cooling and airflow, replace the server cover before you turn on the server.

Replacing the cover

Use this information to replace the cover.

To replace the server cover, complete the following steps:

Step 1. Make sure that all cables, adapters, and other components are installed and seated correctly and that you have not left loose tools or parts inside the server. Also, make sure that all internal cables are correctly routed.

Important: Before you slide the cover forward, make sure that all the tabs on the front, rear, and side of the cover engage the chassis correctly. If all the tabs do not engage the chassis correctly, it will be very difficult to remove the cover later.

Step 2. Position the cover on top of the server.

Step 3. Slide the cover toward the front of the server.

Step 4. Make sure that the cover correctly engages all the inset tabs on the server.

Step 5. Press down on the blue latch on the top (in the center of the front of the server) of the cover.

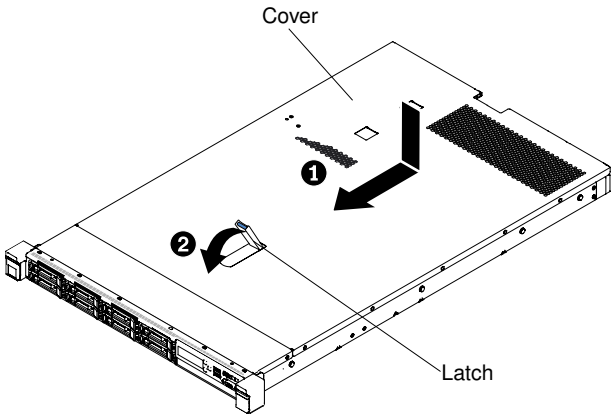

Figure 30. Cover installation

Step 6. If necessary, lock the cover.

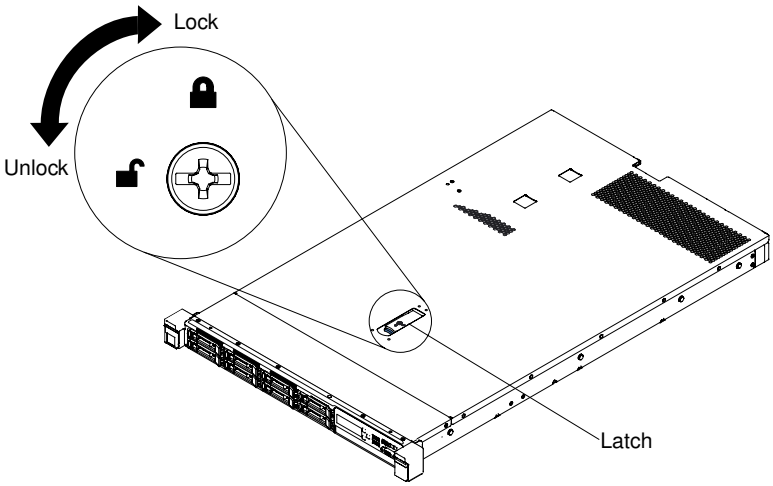

Figure 31. Locking the cover

Step 7. Slide the server back into the rack until it latches.

Step 8. Reconnect the external cables and power cords.

Removing the air baffle

Use this information to remove the air baffle.

To remove the air baffle, complete the following steps:

Step 1. Read the safety information that begins on "Safety" on page v and "Installation guidelines" on page 108.

Step 2. Turn off the server and peripheral devices and disconnect the power cords and all external cables (see "Turning off the server" on page 26).

Step 3. Remove the cover (see "Removing the cover" on page 112).

Step 4. Grasp the air baffle, disengage pins from pin holes; then, lift the air baffle up and set it aside.

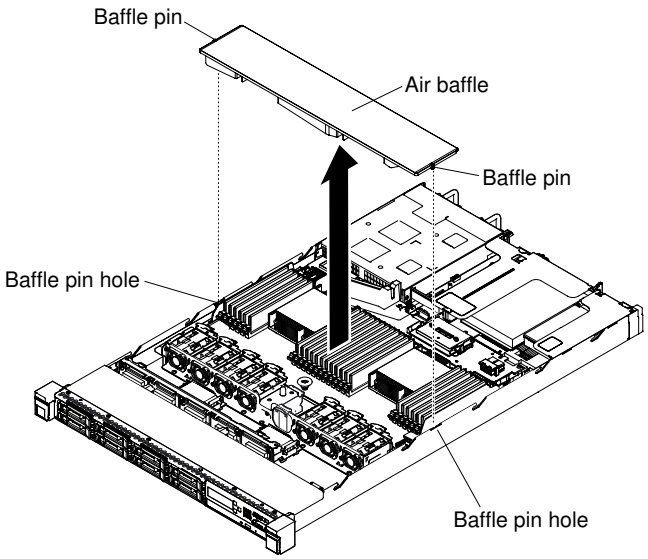

Figure 32. Air baffle removal

Attention: For proper cooling and airflow, replace the air baffle before you turn on the server. Operating the server with the air baffle removed might damage server components.

Replacing the air baffle

Use this information to replace the air baffle.

To install the air baffle, complete the following steps:

Step 1. Read the safety information that begins on "Safety" on page v and "Installation guidelines" on page 108.

Step 2. Turn off the server and peripheral devices and disconnect the power cords and all external cables.

Step 3. Remove the cover (see "Removing the cover" on page 112).

Step 4. Align the air baffle pins with the baffle pin holes on both sides of the chassis; then, lower the air baffle into the server. Press the air baffle down until it is securely seated.

Note: Close the retaining clip on each end of the DIMM connector before installing the air baffle for proper cooling.

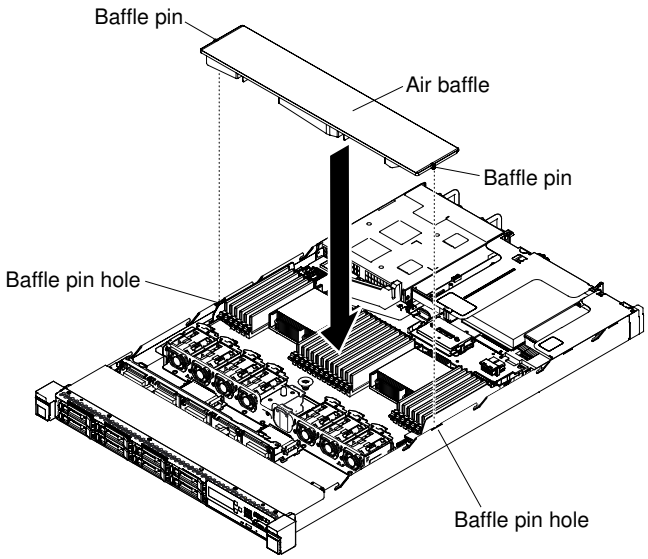

Figure 33. Air baffle installation

Step 5. Reinstall the cover (see "Replacing the cover" on page 113).

Step 6. Slide the server into the rack.

Step 7. Reconnect the power cords and any cables that you removed.

Step 8. Turn on the peripheral devices and the server.

Removing the EIA bracket

Use this information to remove the EIA bracket.

To remove the EIA bracket, complete the following steps:

Step 1. Read the safety information that begins on "Safety" on page v and "Installation guidelines" on page 108.

Step 2. If necessary, turn off the server and peripheral devices and disconnect the power cords and all external cables.

Step 3. If the server has been installed in a rack, slide the server out from the rack enclosure.

Step 4. Remove the screws from the EIA bracket.

Note: Use the T8 torx wedge to remove the screws.

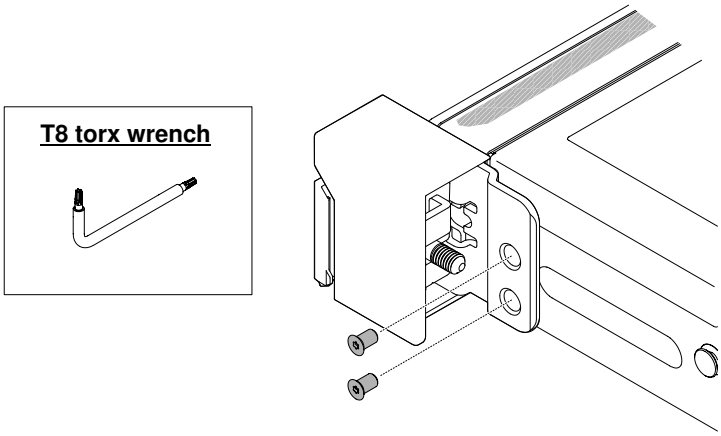

Figure 34. Screw removal

Step 5. Slightly side the EIA bracket to the right; then, remove it from the chassis.

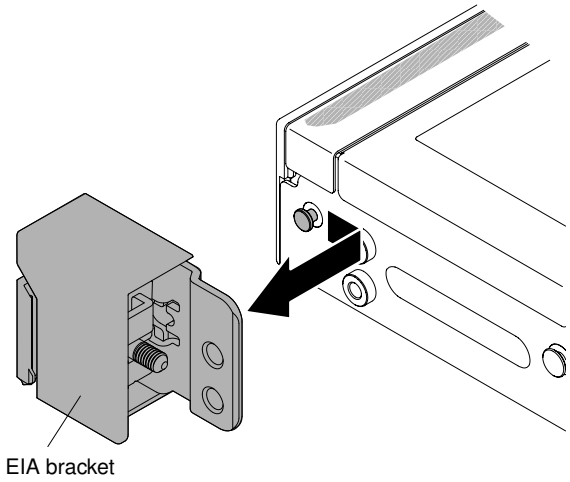

Figure 35. EIA bracket removal

Replacing the EIA bracket

Use this information to replace the EIA bracket.

To replace the EIA bracket, complete the following steps:

Step 1. Read the safety information that begins on "Safety" on page v and "Installation guidelines" on page 108.

Step 2. Align the EIA bracket with the pin on the chassis; then, press the bracket onto the chassis and slightly slide it leftward.

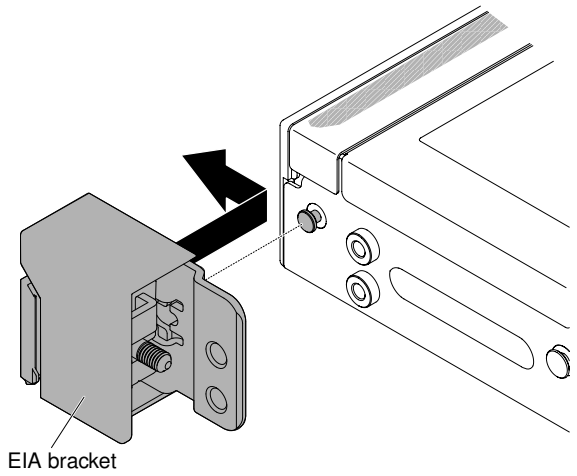

Figure 36. EIA bracket installation

Step 3. Install the screws to secure the EIA bracket to the chassis.

Note: Use the T8 torx wedge to install the screws.

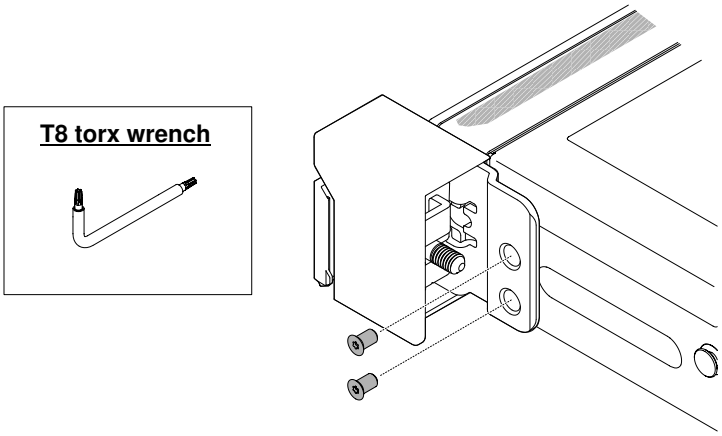

Figure 37. Screw installation

Step 4. Slide the server back into the rack until it latches.

Step 5. Reconnect the external cables and power cords, if necessary.

Removing and replacing Tier 1 CRUs

Replacement of Tier 1 CRUs is your responsibility. If Lenovo installs a Tier 1 CRU at your request, you will be charged for the installation.

The illustrations in this document might differ slightly from your hardware.

Removing hot-swap hard disk drives

Use this information to remove hot-swap hard disk drives.

Attention:

- To avoid damage to the hard disk drive connectors, make sure that the server cover is in place and fully closed whenever you install or remove a hard disk drive.
- To make sure that there is adequate system cooling, do not operate the server for more than two minutes without either a hard disk drive or a filler panel installed in each bay.
- Before you make changes to disk drives, disk drive controllers (including controllers that are integrated on the system board), disk drive backplanes, or disk drive cables, back up all important data that is stored on hard disks.

To remove a hot-swap hard disk drive, complete the following steps:

Step 1. Read the safety information that begins on "Safety" on page v and "Installation guidelines" on page 108.

Step 2. Make sure that you save the data on your drive.

Step 3. Slide the release latch (orange) gently to the left to unlock the drive handle.

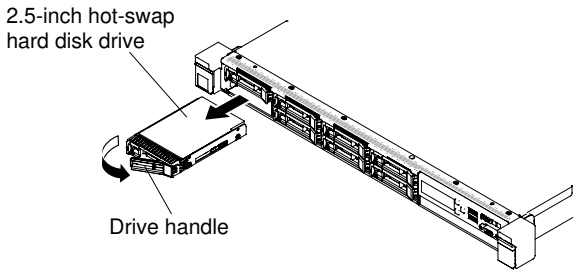

Figure 38. Hot-swap hard disk drives removal

Step 4. Grasp the handle and slide the drive out of the drive bay.

Step 5. Reinstall the drive bay filler panel.

Step 6. If you are instructed to return the drive assembly, follow all packaging instructions, and use any packaging materials for shipping that are supplied to you.

Replacing hot-swap hard disk drives

Use this information to replace hot-swap hard disk drives.

The following notes describe the type of hard disk drives that the server supports and other information that you must consider when you install a hard disk drive. For a list of supported hard disk drives, see http://www.lenovo.com/ serverproven/.

- Locate the documentation that comes with the hard disk drive and follow those instructions in addition to the instructions in this chapter.
- Make sure that you have all the cables and other equipment that are specified in the documentation that comes with the drive.
- Select the bay in which you want to install the drive.
- Check the instructions that come with the drive to determine whether you have to set any switches or jumpers on the drive. If you are installing a SAS or SATA hard disk drive, be sure to set the SAS or SATA ID for that device.
- The hot-swap server models support up to eight 2.5-inch hot-swap SAS or SATA hard disk drives.
- The electromagnetic interference (EMI) integrity and cooling of the server are protected by having all bays and PCI and PCI Express slots covered or occupied. When you install a drive, PCI, or PCI Express

adapter, save the EMC shield and filler panel from the bay or PCI or PCI Express adapter slot cover in the event that you later remove the device.

- For a complete list of supported optional devices for the server, see http://www.lenovo.com/ serverproven/.

To install a hot-swap SAS or SATA hard disk drive, complete the following steps:

Note: If you have only one hard disk drive, you must install it in the bay 0 (upper-left).

Step 1. Read the safety information that begins on "Safety" on page v and "Installation guidelines" on page 108.

Step 2. Remove the filler panel from the empty drive bay. Keep the filler panel in a safe place.

Step 3. Touch the static-protective package that contains the drive to any unpainted metal surface on the server; then, remove the drive from the package and place it on a static-protective surface.

Step 4. Install the hard disk drive in the drive bay:

a. Make sure that the tray handle is in the open (unlocked) position.

b. Align the drive with the guide rails in the bay.

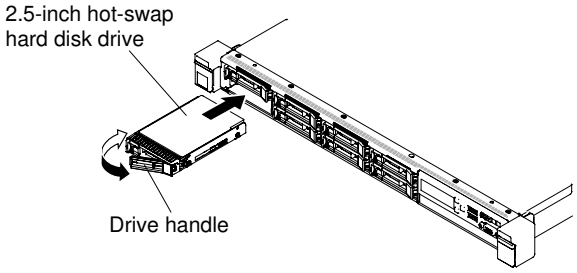

Figure 39. Hot-swap hard disk drive installation

c. Gently push the drive into the bay until the drive stops.

d. Rotate the tray handle to the closed (locked) position.

e. Check the hard disk drive status LED to verify that the hard disk drive is operating correctly. If the yellow hard disk drive status LED of a drive is lit continuously, that drive is faulty and must be replaced. If the green hard disk drive activity LED is flashing, the drive is being accessed.

Step 5. If you are installing additional hot-swap hard disk drives, do so now.

Step 6. Turn on the peripheral devices and the server.

Removing a memory module

Use this information to remove a memory module.

To remove a dual inline memory module (DIMM), complete the following steps:

Step 1. Read the safety information that begins on "Safety" on page v and "Installation guidelines" on page 108.

Step 2. Turn off the server and peripheral devices and disconnect all power cords.

Step 3. Remove the cover (see "Removing the cover" on page 112).

Step 4. Remove the air baffle (see "Removing the air baffle" on page 114).

Step 5. Carefully open the retaining clips on each end of the DIMM connector and remove the DIMM.

Attention: To avoid breaking the retaining clips or damaging the DIMM connectors, open and close the clips gently.

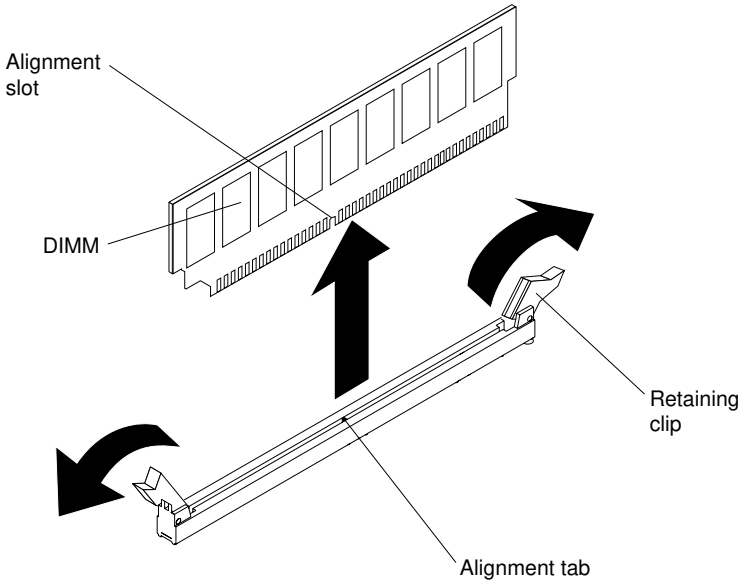

Figure 40. DIMM removal

If you are instructed to return the DIMM, follow all packaging instructions, and use any packaging materials for shipping that are supplied to you.

Memory module installation

The following notes describe the types of DIMMs that the server supports and other information that you must consider when you install DIMMs.

- When you install or remove DIMMs, the server configuration information changes. When you restart the server, the system displays a message that indicates that the memory configuration has changed.
- The server supports only industry-standard double-data-rate 4 (DDR4) 2400 MHz PC4-19200 registered or load reduction, synchronous dynamic random-access memory (SDRAM) dual inline memory modules (DIMMs) with error correcting code (ECC). See http://www.lenovo.com/ serverproven/ for a list of supported memory modules for the server.
  - The specifications of a DDR4 DIMM are on a label on the DIMM, in the following format. *ggggeRxff* PC3*v-wwwwwm-aa-bb-ccd*

    where:

    - *ggggg* is the total capacity of the DIMM (for example, 1 GB, 2 GB, or 4 GB)
    - *eR* is the number of ranks

      1R = single-rank

      2R = dual-rank

      4R = quad-rank
    - *xff* is the device organization (bit width)

      x4 = x4 organization (4 DQ lines per SDRAM)

      x8 = x8 organization

      x16 = x16 organization

- *v* is the SDRAM and support component supply voltage (VDD)
  - Blank = 1.2 V specified
- *wwwww* is the DIMM bandwidth, in MBps

  12800 = 12.80 GBps (DDR4-1600 SDRAMs, 8-byte primary data bus)

  14900 = 14.93 GBps (DDR4-1866 SDRAMs, 8-byte primary data bus)

  17000 = 17.00 GBps (DDR4-2133 SDRAMs, 8-byte primary data bus)

  19200 = 19.20 GBps (DDR4-2400 SDRAMs, 8-byte primary data bus)
- *m* is the DIMM type

  L = Load Reduction DIMM (LRDIMM)

  R = Registered DIMM (RDIMM)
- *aa* is the CAS latency, in clocks at maximum operating frequency
- *bb* is the JEDEC SPD Revision Encoding and Additions level
- *cc* is the reference design file for the design of the DIMM
- *d* is the revision number of the reference design of the DIMM

Note: To determine the type of a DIMM, see the label on the DIMM. The information on the label is in the format xxxxx *n*Rxxx PC3v-xxxxxx-xx-xx-xxx. The numeral in the sixth numerical position indicates whether the DIMM is single-rank (*n*=1), dual-rank (*n*=2), or quad-rank (*n*=4).

- The following rules apply to DDR4 RDIMM speed as it relates to the number of RDIMMs in a channel:
  - When you install 1 RDIMM per channel, the memory runs at 2400 MHz.
  - When you install 2 RDIMMs per channel, the memory runs at 2400 MHz.
  - When you install 3 RDIMMs per channel, the memory may run at 1866 MHz.
  - All channels in a server run at the fastest common frequency.
  - Do not install registered, unbuffered, and load reduction DIMMs in the same server.
- The maximum memory speed is determined by the combination of the microprocessor, DIMM speed, DIMM type, Operating Modes in UEFI settings, and the number of DIMMs installed in each channel.
- In two-DIMM-per-channel configuration, the server automatically operates with a maximum memory speed of up to 2400 MHz when the following condition is met:
  - Two 1.35 V dual-rank RDIMMs are installed in the same channel. In the Setup Utility, **Memory speed** is set to **Max performance** and **LV-DIMM power** is set to **Enhance performance** mode. The 1.35 V RDIMMs will function at 1.5 V.
- The server supports a maximum of 24 dual-rank RDIMMs or 24 quad-rank LRDIMMs.
- The following table shows an example of the maximum amount of memory that you can install using RDIMMs:

Table 22. Maximum memory installation

Number of DIMMs	DIMM type	Size	Total memory
24	Dual-rank RDIMM	16 GB	384 GB
24	Dual-rank RDIMM	32 GB	768 GB
24	Quad-rank LRDIMM	64 GB	1536 GB

- The RDIMM options that are available for the server are 16 GB, and 32 GB. The server supports a minimum of 64 GB and a maximum of 768 GB of system memory using RDIMMs.

- The LRDIMM option that is available for the server is 64 GB. The server supports a minimum of 64 GB and a maximum of 1536 GB of system memory using LRDIMMs.

  Note: The amount of usable memory is reduced depending on the system configuration. A certain amount of memory must be reserved for system resources. To view the total amount of installed memory and the amount of configured memory, run the Setup Utility. For additional information, see "Configuring the server" on page 30.
- A minimum of one DIMM must be installed for each microprocessor. For example, you must install a minimum of two DIMMs if the server has two microprocessors installed. However, to improve system performance, install a minimum of four DIMMs for each microprocessor.
- DIMMs in the server must be the same type (RDIMM or LRDIMM) to ensure that the server will operate correctly.
- When you install one quad-rank DIMM in a channel, install it in the DIMM connector furthest away from the microprocessor.
- You can install DIMMs for microprocessor 2 as soon as you install microprocessor 2; you do not have to wait until all of the DIMM slots for microprocessor 1 are filled.
- DIMM slots 13-24 are reserved for microprocessor 2; thus, DIMM slots 13-24 are enabled when microprocessor 2 is installed.

The following illustration shows the location of the DIMM connectors on the system board.

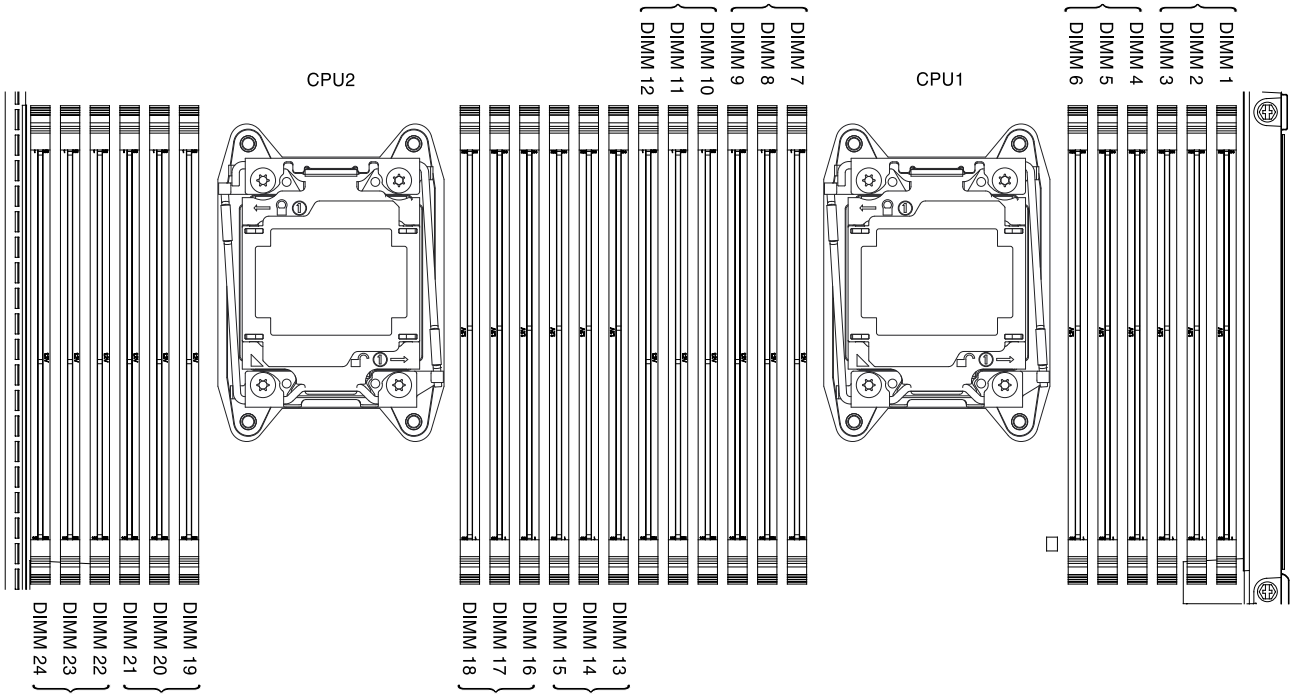

Figure 41. DIMM connectors location

DIMM installation sequence

When you install additional DIMMs, install them in the order shown in the following table to optimize system performance.

In general, all four channels on the memory interface for each microprocessor can be populated in any order and have no matching requirements.

Table 23. Normal mode DIMM installation sequence

Number of installed microprocessors	DIMM connector population sequence
One microprocessor installed	1, 4, 9, 12, 2, 5, 8, 11, 3, 6, 7, 10
Two microprocessors installed	1, 13, 4, 16, 9, 21, 12, 24, 2, 14, 5, 17, 8, 20, 11, 23, 3, 15, 6, 18, 7, 19, 10, 22

Memory mirrored channel

Memory mirrored channel mode replicates and stores data on two pairs of DIMMs within two channels simultaneously.

If a failure occurs, the memory controller switches from the primary pair of memory DIMMs to the backup pair of DIMMs. To enable memory mirrored channel through the Setup Utility, select **System Settings → Memory**. For more information, see "Using the Setup Utility" on page 31. When you use the memory mirrored channel feature, consider the following information:

- When you use memory mirrored channel, you must install a pair of DIMMs at a time. The two DIMMs in each pair must be identical in size, type, and rank (single, dual, or quad), and organization, but not in speed. The channels run at the speed of the slowest DIMM in any of the channels.
- The maximum available memory is reduced to half of the installed memory when memory mirrored channel is enabled. For example, if you install 64 GB of memory using RDIMMs, only 32 GB of addressable memory is available when you use memory mirrored channel.

The following diagram lists the DIMM connectors on each memory channel.

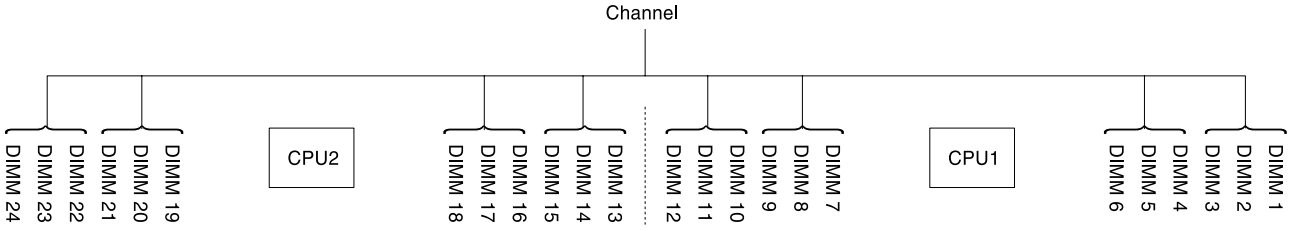

Figure 42. Connectors on each memory channel

The following table shows the installation sequence for memory mirrored channel mode:

Table 24. Memory mirrored channel mode DIMM population sequence

DIMMs	Number of installed microprocessors	DIMM connector population sequence on the system board
One Microprocessor		
1st set	1	1, 4
2nd set	1	9, 12
3rd set	1	2, 5
4th set	1	8, 11
5th set	1	3, 6
6th set	1	7, 10
Two Microprocessors		

Table 24. Memory mirrored channel mode DIMM population sequence (continued)

DIMMs	Number of installed microprocessors	DIMM connector population sequence on the system board
1st set	2	1, 4
2nd set	2	13, 16
3rd set	2	9, 12
4th set	2	21, 24
5th set	2	2, 5
6th set	2	14, 17
7th set	2	8, 11
8th set	2	20, 23
9th set	2	3, 6
10th set	2	15, 18
11th set	2	7, 10
12th set	2	19, 22

Memory rank sparing

The memory rank sparing feature disables the failed memory from the system configuration and activates a rank sparing DIMM to replace the failed active DIMM.

You can enable rank sparing memory in the Setup Utility, select **System Settings → Memory**. For more information, see "Using the Setup Utility" on page 31.

The maximum available memory is reduced when memory rank sparing mode is enabled.

The following diagram lists the DIMM connectors on each memory channel.

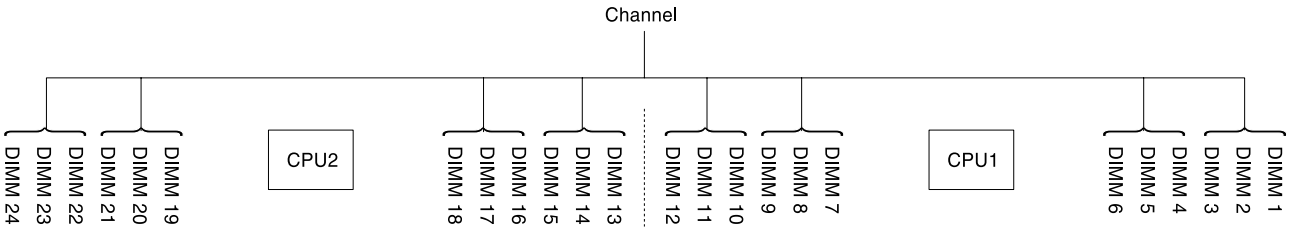

Figure 43. Connectors on each memory channel

Follow the installation sequence for rank sparing mode:

- Install at least one quad-rank DIMM in a channel.
- Install at least two single-rank or dual-rank DIMMs in a channel.

Table 25. Memory rank sparing mode DIMM population sequence when only quad-rank RDIMMs are installed

Number of installed microprocessors	DIMM connector population sequence on the system board
One	1, 4, 9, 12, 2, 5, 8, 11
Two	1, 13, 4, 16, 9, 21, 12, 24, 2, 14, 5, 17, 8, 20, 11, 23

Table 26. Memory rank sparing mode DIMM population sequence when single/dual/quad rank DIMMs are installed and the total number of DIMMs is even

DIMMs	Number of installed microprocessors	DIMM connector population sequence on the system board
One Microprocessor		
1st set	1	1, 2
2nd set	1	4, 5
3rd set	1	8, 9
4th set	1	11, 12
5th set	1	3, 6
6th set	1	7, 10
Two Microprocessors		
1st set	2	1, 2
2nd set	2	13, 14
3rd set	2	4, 5
4th set	2	16, 17
5th set	2	8, 9
6th set	2	20, 21
7th set	2	11, 12
8th set	2	23, 24
9th set	2	3, 6
10th set	2	15, 18
11th set	2	7, 10
12th set	2	19, 22

Table 27. Memory rank sparing mode DIMM population sequence when single/dual/quad rank DIMMs are installed and the total number of DIMMs is odd

DIMMs	Number of installed microprocessors	DIMM connector population sequence on the system board
One Microprocessor		
1st set	1	1, 2, 3
2nd set	1	4, 5
3rd set	1	8, 9
4th set	1	11, 12

Table 27. Memory rank sparing mode DIMM population sequence when single/dual/quad rank DIMMs are installed and the total number of DIMMs is odd (continued)

DIMMs	Number of installed microprocessors	DIMM connector population sequence on the system board
5th set	1	6, 7
Two Microprocessors		
1st set	2	1, 2, 3
2nd set	2	13, 14
3rd set	2	4, 5
4th set	2	16, 17
5th set	2	8, 9
6th set	2	20, 21
7th set	2	11, 12
8th set	2	23, 24
9th set	2	6, 7
10th set	2	18, 19
11th set	2	10, 22

Replacing a memory module

Use this information to replace a memory module.

To install a memory module, complete the following steps:

Step 1. Read the safety information that begins on "Safety" on page v and "Installation guidelines" on page 108.

Step 2. Turn off the server and peripheral devices and disconnect the power cords and all external cables, if necessary.

Step 3. Remove the cover (see "Removing the cover" on page 112).

Step 4. Remove the air baffle (see "Removing the air baffle" on page 114).

Step 5. Touch the static-protective package that contains the DIMM to any unpainted metal surface on the outside of the server. Then, remove the DIMM from the package.

Step 6. Carefully open the retaining clips on each end of the DIMM connector.

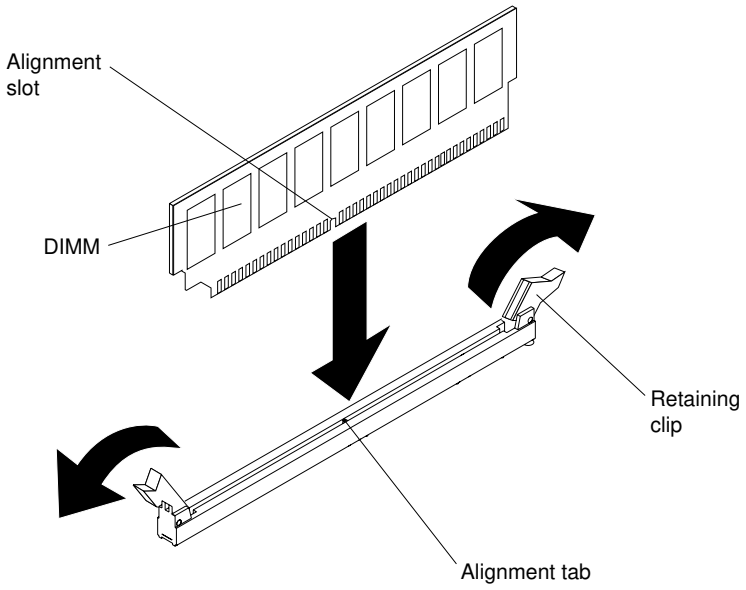

Figure 44. DIMM installation

Step 7. Turn the DIMM so that the alignment slot aligns correctly with the alignment tab.

Step 8. Insert the DIMM into the connector by aligning the edges of the DIMM with the slots at the ends of the DIMM connector (see "System-board internal connectors" on page 21 for the locations of the DIMM connectors).

Step 9. Firmly press the DIMM straight down into the connector by applying pressure on both ends of the DIMM simultaneously. The retaining clips snap into the locked position when the DIMM is firmly seated in the connector.

Note: If there is a gap between the DIMM and the retaining clips, the DIMM has not been correctly inserted; open the retaining clips, remove the DIMM, and then reinsert it.

Step 10. Reconnect the power cords and any cables that you removed.

Step 11. Replace the air baffle (see "Replacing the air baffle" on page 115).

Note: Close all the retaining clips even for slots without DIMMs installed before replacing the air baffle.

Step 12. Reinstall the cover (see "Replacing the cover" on page 113).

Step 13. Turn on the peripheral devices and the server.

Removing a PCI riser-card assembly

Use this information to remove a PCI riser-card assembly.

Note: PCI riser-card brackets must be installed even if you do not install an adapter.

To remove a PCI riser-card assembly, complete the following steps:

Step 1. Read the safety information that begins on "Safety" on page v and "Installation guidelines" on page 108.

Step 2. Turn off the server and peripheral devices and disconnect the power cords and all external cables.

Step 3. Remove the cover (see "Removing the cover" on page 112).

Step 4. If an adapter is installed in the PCI riser-card assembly, disconnect any cables that are connected to the adapter.

Step 5. Grasp both ends or the handle of the PCI riser-card assembly and lift it out of the PCI riser-card slot on the system board. The following illustrations show the different PCI riser-card assembly configurations that could be present in the server.

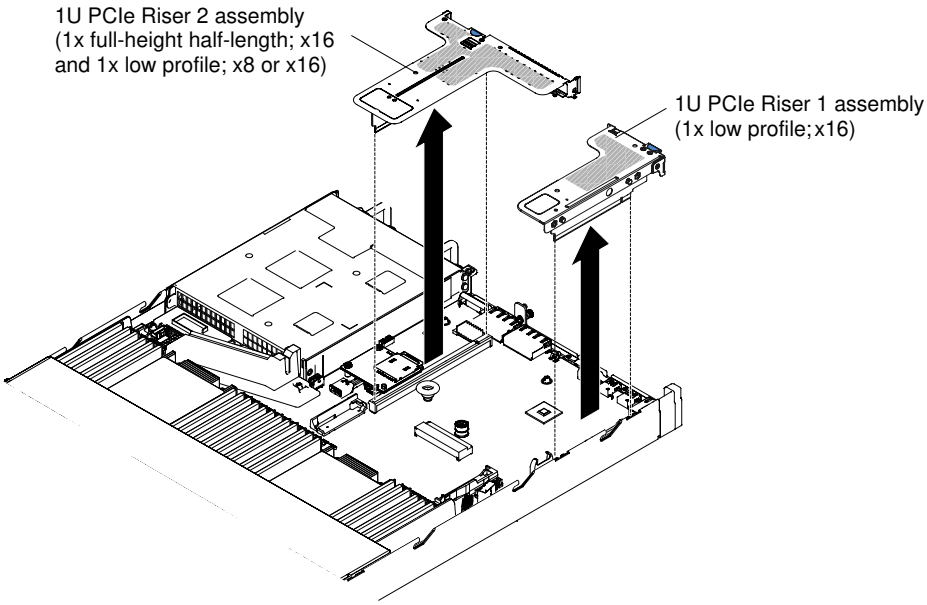

Figure 45. PCI riser-card assembly removal

Step 6. Remove the adapter, if one is present, from the PCI riser-card assembly (see "Removing an adapter" on page 132).

Step 7. Set the adapter and the PCI riser-card assembly aside.

If you are instructed to return the PCI riser-card assembly, follow all packaging instructions, and use any packaging materials for shipping that are supplied to you.

Replacing a PCI riser-card assembly

Use this information to replace a PCI riser-card assembly.

Note: PCI riser-card brackets must be installed even if you do not install an adapter.

The following table lists the supported PCI riser-card assembly configurations in the server.

Table 28. Configuration 1 (HX1310 only)

Configuration 1				
Configuration	**Number of microprocessors installed**	**PCI riser-card assembly connector 1 on system board**	**PCI riser-card assembly connector 2 on system board**	
		Slot 1	**Slot 2**	**Slot 3**
• Three low-profile slots	One	x1/x4/x8/x16 low-profile	x1/x4/x8 low-profile	x1/x4/x8 low-profile

Table 29. Configuration 2 (HX2310-E, HX3310, HX3310-F)

Configuration 2				
Configuration	**Number of microprocessors installed**	**PCI riser-card assembly connector 1 on system board**	**PCI riser-card assembly connector 2 on system board**	
		Slot 1	**Slot 2**	**Slot 3**
• Three low-profile slots	Two	x1/x4/x8/x16 low-profile	x1/x4/x8/x16 low-profile	x1/x4/x8/ x16 low-profile

To install a PCI riser-card assembly, complete the following steps:

Step 1. Read the safety information that begins on "Safety" on page v and "Installation guidelines" on page 108.

Step 2. Turn off the server and peripheral devices and disconnect all power cords.

Step 3. Remove the cover (see "Removing the cover" on page 112).

Step 4. Install the adapter in the new PCI riser-card assembly (see "Replacing an adapter" on page 133).

Step 5. Set any jumpers or switches on the adapter as directed by the adapter manufacturer.

Step 6. Remove the PCI filler panel, if one is present, from the rear of the server.

Step 7. Align the PCI riser-card assembly with the PCI riser connector on the system board; then, press down firmly until the PCI riser-card assembly is seated correctly in the connector on the system board.

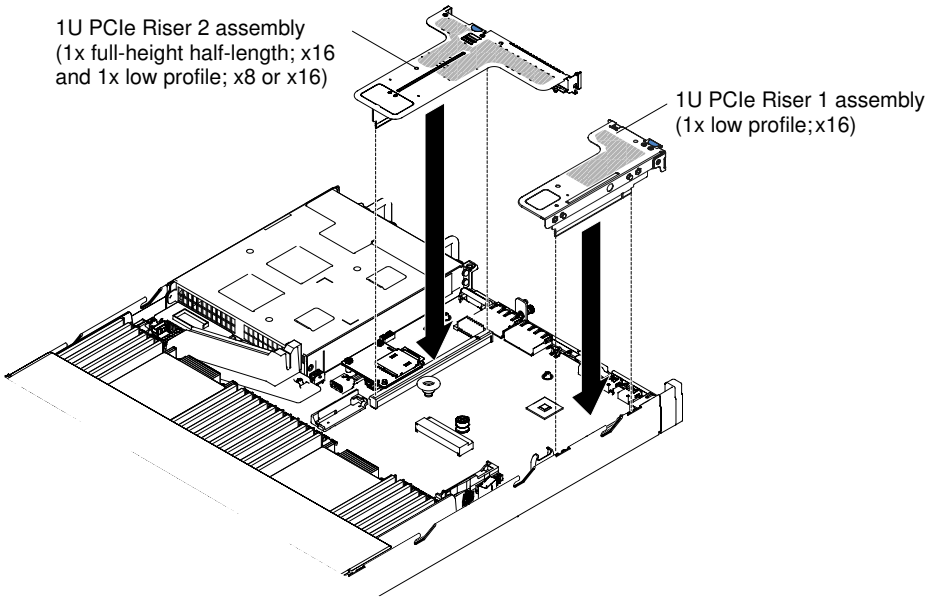

Figure 46. PCI riser-card assembly installation

Step 8. Reinstall the cover (see "Replacing the cover" on page 113).

Step 9. Slide the server into the rack.

Step 10. Reconnect the power cords and any cables that you removed.

Step 11. Turn on the peripheral devices and the server.

Removing the dedicated slotless HBA controller

Use this information to remove the dedicated slotless HBA controller.

The dedicated slotless HBA controller can be installed in the dedicated connector on the system board (see "System-board internal connectors" on page 21 for the location of the connectors).

To remove the dedicated slotless HBA controller, complete the following steps:

1. Read the safety information that begins on "Safety" on page v and "Installation guidelines" on page 108.
2. Turn off the server and peripheral devices and disconnect the power cords and all external cables, if necessary.
3. Remove the cover (see "Removing the cover" on page 112).
4. Disconnect the signal cables from the connectors on the controller and note their locations.
5. **1** Press the retention tabs away from the controller; then, slightly lift up the rear of the controller, and **2** pull it out of the connector on the system board.

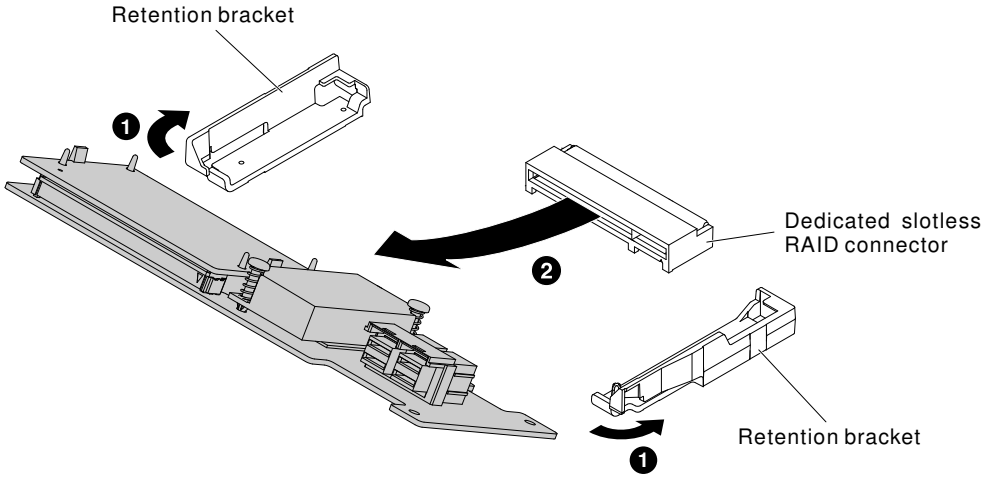

Figure 47. Dedicated slotless HBA controller removal

6. If you are instructed to return the dedicated slotless HBA controller, follow all of the packaging instructions, and use any packaging materials for shipping that are supplied to you.

Replacing the dedicated slotless HBA controller

Use this information to replace the dedicated slotless HBA controller.

The dedicated slotless HBA controller can be installed in the dedicated connector on the system board (see "System-board internal connectors" on page 21 for the location of the connectors).

To replace the dedicated slotless HBA controller, complete the following steps:

1. Read the safety information that begins on "Safety" on page v and "Installation guidelines" on page 108.
2. Turn off the server and peripheral devices and disconnect the power cords and all external cables, if necessary.
3. Remove the cover (see "Removing the cover" on page 112).
4. If you are installing a new or replacement controller, touch the static-protective package that contains the new controller to any unpainted metal surface on the server. Then, remove the new controller from the package.

5. Align the controller so that the keys align correctly with the connector on the system board.
6. Insert the controller into the HBA connector on the system board until it is firmly seated. The retention brackets secure the controller in place when the controller is firmly seated into the connector.

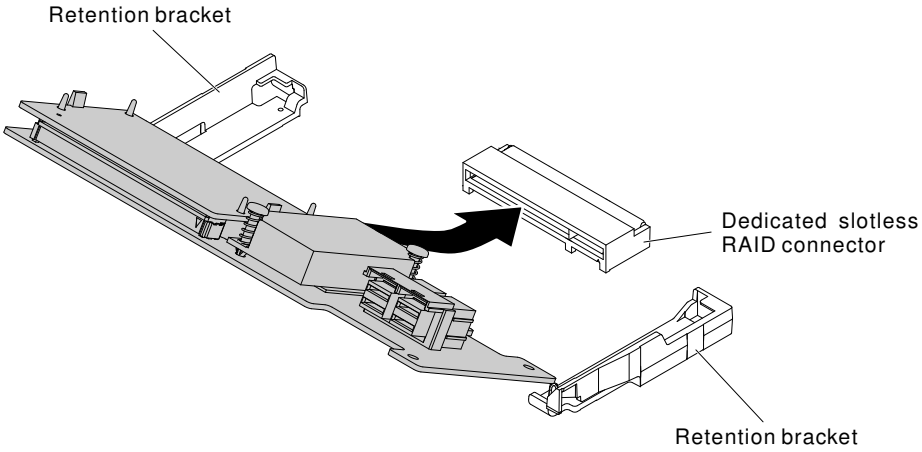

Figure 48. Dedicated slotless HBA controller installation

7. If you are instructed to return the dedicated slotless HBA controller, follow all of the packaging instructions, and use any packaging materials for shipping that are supplied to you.
8. Route the backplane signal cables. (See "Replacing a hot-swap hard disk drive backplane" on page 142).
9. Connect the signal cables to the controller.
10. Reinstall the cover (see "Replacing the cover" on page 113).
11. Slide the server into the rack.
12. Reconnect the power cords and any cables that you removed.

Removing an adapter

Use this information to remove an adapter.

To remove an adapter, complete the following steps:

Step 1. Read the safety information that begins on "Safety" on page v and "Installation guidelines" on page 108.

Step 2. Turn off the server and peripheral devices and disconnect all power cords; then, remove the cover (see "Removing the cover" on page 112).

Step 3. Disconnect any cables from the adapter.

Step 4. Grasp the PCI riser-card assembly at the blue tabs and lift to remove the PCI riser-card assembly.

Step 5. Place the PCI riser-card assembly on a flat and static-protective surface.

Step 6. Carefully grasp the adapter by its top edge or upper corners, and pull the adapter from the PCI riser-card assembly.

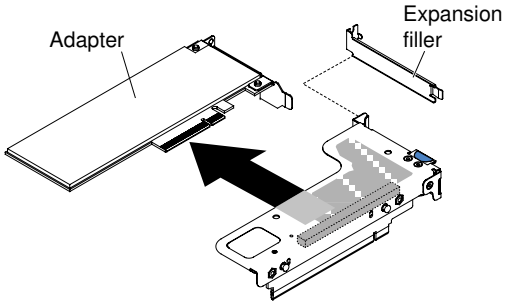

Figure 49. Adapter removal from a PCI riser-card assembly that has one low-profile slot (for PCI riser-card assembly connector 1 on system board)

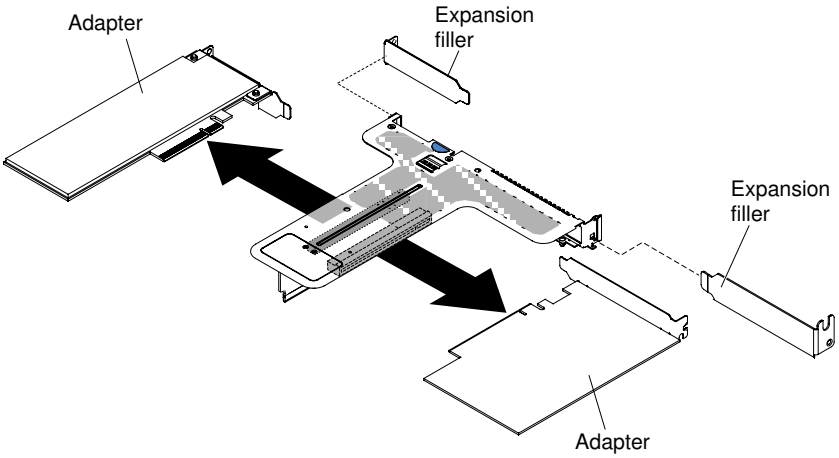

Figure 50. Adapter removal from a PCI riser-card assembly that has one low-profile slot and one full-height half-length slot (for PCI riser-card assembly connector 2 on system board)

If you are instructed to return the adapter, follow all packaging instructions, and use any packaging materials for shipping that are supplied to you.

Replacing an adapter

The following notes describe the types of adapters that the server supports and other information that you must consider when you install an adapter.

- Locate the documentation that comes with the adapter and follow those instructions in addition to the instructions in this section.
- Do not set the maximum digital video adapter resolution above 1600 x 1200 at 75 Hz for an LCD monitor. This is the highest resolution that is supported for any add-on video adapter that you install in the server.
- Any high-definition video-out connector or stereo connector on any add-on video adapter is not supported
- The server does not support full-length, full-height PCI adapters or legacy 5V PCI adapters.
- When you install any PCI adapter, the power cords must be disconnected from the power source before you remove the PCI Express riser-card assembly. Otherwise, the active power management event signal will be disabled by the system-board logic, and the Wake on LAN feature might not work. However, after the server is powered-on locally, the active power manager active power management event signal will be enabled by the system-board logic.
- The Intel X710 2x10GbE SFP+ Adapter supports 10-Gbps transfer rate only.
- Pay attention to the following before installing any PCI adapter.

- Pay attention to the following PCI adapter configuration table before installing any PCI adapter.

Table 30. Adapter configurations

Description	Option part number	PCI riser 1	PCI riser 2
Intel X540 ML2 Dual Port 10GbaseT Adapter	00D1994	Seven fans required	Seven fans required
Note: You can purchase the System x3550 M5 Fan Gen 2 (option part number: 00MV373) to acquire two additional fans for your server.			

- The server provides two PCI riser-card slots on the system board.The following table lists the supported PCI riser-card assembly configurations in the server.

Table 31. Configuration 1 (HX1310 only)

Configuration 1				
Configuration	**Number of microprocessors installed**	**PCI riser-card assembly connector 1 on system board**	**PCI riser-card assembly connector 2 on system board**	
		Slot 1	**Slot 2**	**Slot 3**
– Three low-profile slots	One	x1/x4/x8/x16 low-profile	x1/x4/x8 low-profile	x1/x4/x8 low-profile

Table 32. Configuration 2 (HX2310-E, HX3310, HX3310-F)

Configuration 2				
Configuration	**Number of microprocessors installed**	**PCI riser-card assembly connector 1 on system board**	**PCI riser-card assembly connector 2 on system board**	
		Slot 1	**Slot 2**	**Slot 3**
– Three low-profile slots	Two	x1/x4/x8/x16 low-profile	x1/x4/x8/x16 low-profile	x1/x4/x8/ x16 low-profile

Note: Always refer to the above configurations when installing a PCI riser-card assembly. Do not install a PCI-riser card assembly that does not follow the above configurations.

The instructions in this section apply to any PCI adapter (for example, video graphics adapters or network adapters).

To replace an adapter, complete the following steps:

Note: If your adapter was previously configured, back up or record its configuration information, if possible, before replacing the adapter. See the documentation for your adapter for information and instructions.

Step 1. Read the safety information that begins on "Safety" on page v and "Installation guidelines" on page 108.

Step 2. Turn off the server and peripheral devices and disconnect the power cords and all external cables.

Step 3. Remove the cover (see "Removing the cover" on page 112).

Step 4. Follow the cabling instructions, if any come with the adapter. Route the adapter cables before you install the adapter.

Step 5. Insert the adapter into the PCI riser-card assembly, aligning the edge connector on the adapter with the connector on the PCI riser-card assembly. Press the edge of the connector *firmly* into the PCI riser-card assembly. Make sure that the adapter snaps into the PCI riser-card assembly securely. The following illustrates show the different types of PCI riser-card assemblies:

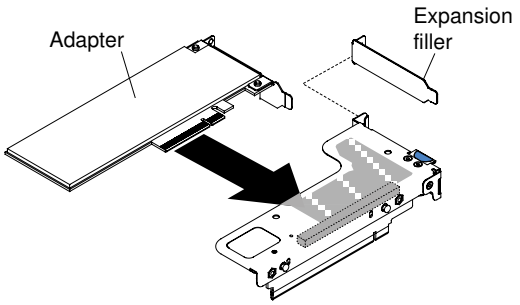

Figure 51. Adapter installation into a PCI riser-card assembly that has one low-profile slot (for PCI riser-card assembly connector 1 on system board)

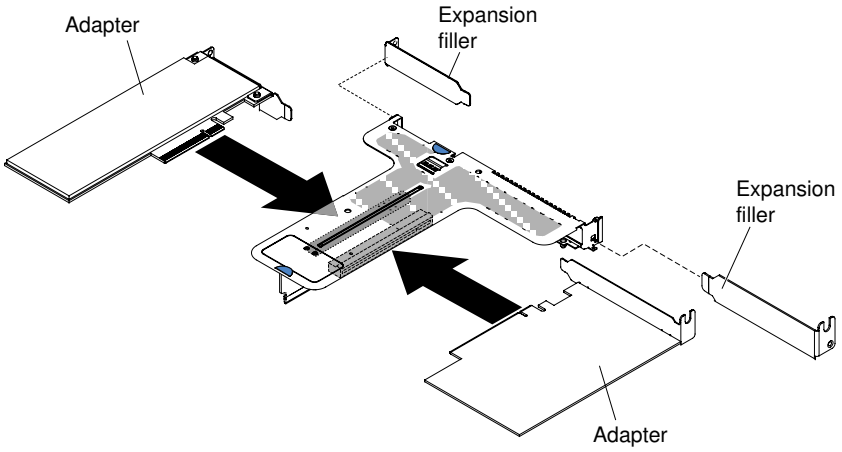

Figure 52. Adapter installation into a PCI riser-card assembly that has one low-profile slot and one full-height half-length slot (for PCI riser-card assembly connector 2 on system board)

Attention: When you install an adapter, make sure that the adapter is correctly seated in the riser-card assembly and that the riser-card assembly is securely seated in the riser-card connector on the system board before you turn on the server. An incorrectly seated adapter might cause damage to the system board, the riser-card assembly, or the adapter.

Step 6. Install the PCI riser-card assembly in the server (see "Replacing a PCI riser-card assembly" on page 129).

Step 7. Connect the cable to the newly-installed adapter.

Step 8. Perform any configuration tasks that are required for the adapter.

Step 9. Reinstall the cover (see "Replacing the cover" on page 113).

Step 10. Slide the server into the rack.

Step 11. Reconnect the power cords and any cables that you removed.

Step 12. Turn on the peripheral devices and the server.

Removing a thermal kit (hot-swap fan)

Use this information to remove a thermal kit (hot-swap fan).

Attention: It is not necessary to disconnect the power when removing the hot-swap fan. To ensure proper server operation, replace a failed hot-swap fan within 30 seconds.

To remove a hot-swap-fan, complete the following steps:

Step 1. Read the safety information that begins on "Safety" on page v and "Installation guidelines" on page 108.

Step 2. Remove the cover (see "Removing the cover" on page 112).

Step 3. Grasp the orange fan tabs on both ends of the fan and slowly lift it out of the chassis.

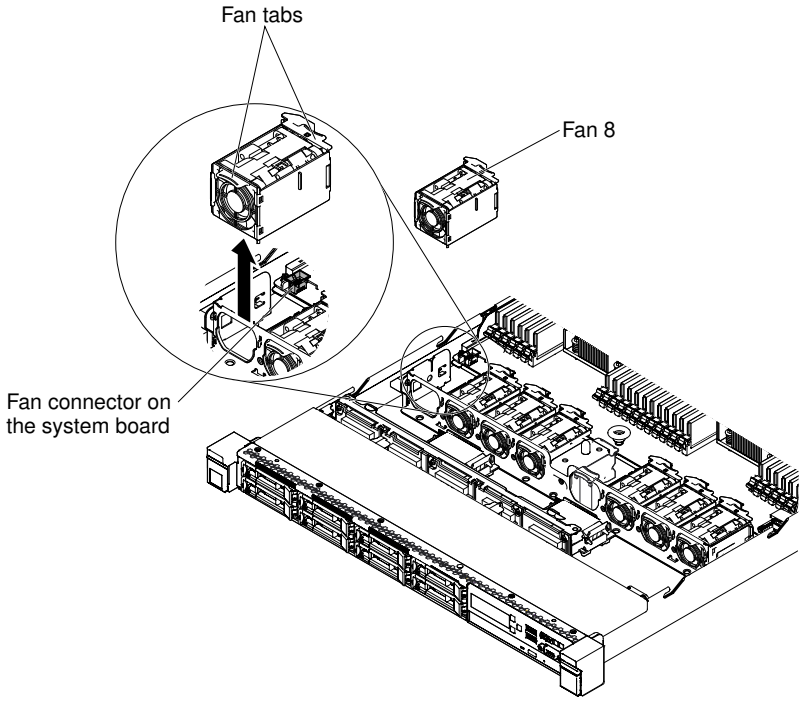

Figure 53. Fan removal

If you are instructed to return the fan, follow all of the packaging instructions, and use any packaging materials for shipping that are supplied to you.

Replacing a thermal kit (hot-swap fan)

Use this information to replace a thermal kit (hot-swap fan).

The server comes standard with five dual-motor hot-swap cooling fans. When there is one microprocessor installed, install fan 1, 2, 3, 5, and 7 for proper cooling.

Attention: To ensure proper operation, replace a failed hot-swap fan within 30 seconds.

To replace a hot-swap fan, complete the following steps:

Step 1. Read the safety information that begins on "Safety" on page v and "Installation guidelines" on page 108.

Step 2. Remove the cover (see "Removing the cover" on page 112).

Step 3. Touch the static-protective package that contains the new fan to any unpainted metal surface on the server. Then, remove the new fan from the package.

Step 4. Orient the fan over the fan slot in the fan assembly bracket so that the fan connector aligns with the connector on the system board.

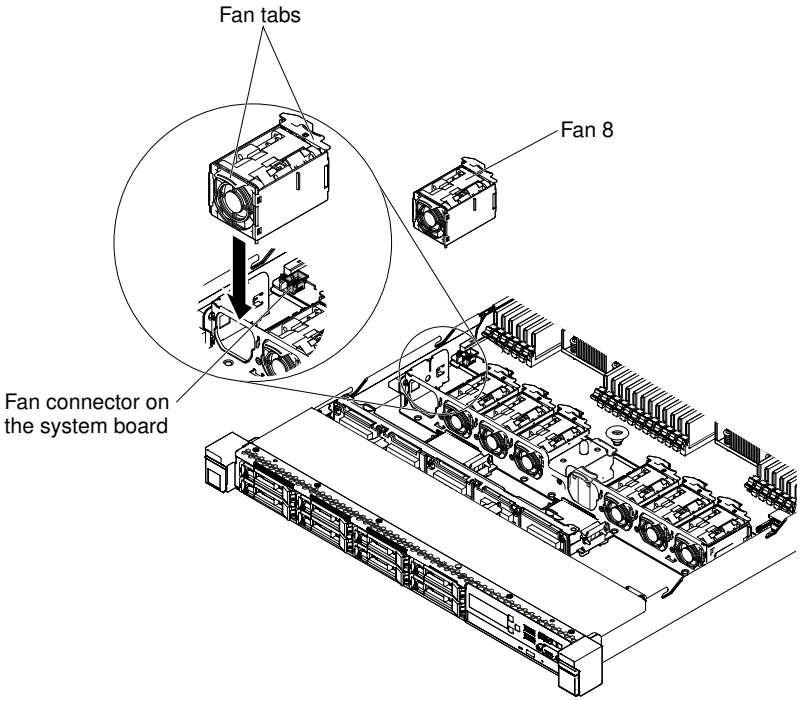

Figure 54. Fan installation (1)

Step 5. Insert the fan into the fan slot in the fan assembly bracket and press it down until it is seated correctly in the slot and the fan connector is installed correctly to the connector on the system board.

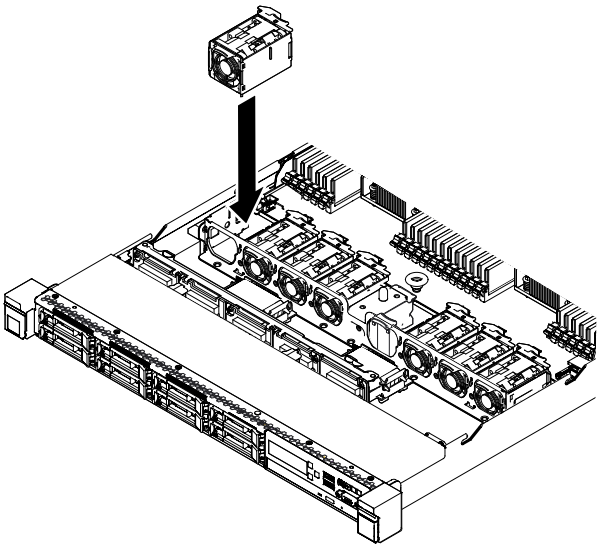

Figure 55. Fan installation (2)

Note: Make sure that the newly-installed fan aligns horizontally with other correctly-seated fans for proper installation.

Step 6. Reinstall the cover (see "Replacing the cover" on page 113).

Step 7. Slide the server into the rack.

Removing a hot-swap ac power supply

Use this information to remove a hot-swap ac power supply.

When you remove or install a hot-swap power supply, observe the following precautions.

CAUTION:
The power control button on the device and the power switch on the power supply do not turn off the electrical current supplied to the device. The device also might have more than one power cord. To remove all electrical current from the device, ensure that all power cords are disconnected from the power source.

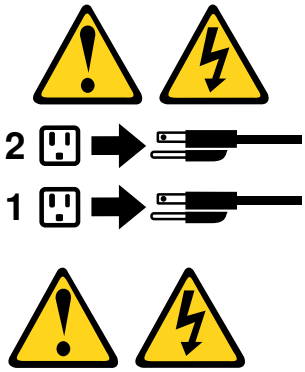

CAUTION:
Never remove the cover on a power supply or any part that has the following label attached.

Hazardous voltage, current, and energy levels are present inside any component that has this label attached. There are no serviceable parts inside these components. If you suspect a problem with one of these parts, contact a service technician.

To remove a hot-swap ac power supply, complete the following steps:

Step 1. Read the safety information that begins on "Safety" on page v and "Installation guidelines" on page 108.

Step 2. If only one power supply is installed, turn off the server and peripheral devices and disconnect all power cords.

Step 3. If the server is in a rack, at the back of the server, pull back the cable management arm to gain access to the rear of the server and the power supply.

Step 4. Press and hold the release tab to the left. Grasp the handle and pull the power supply out of the server.

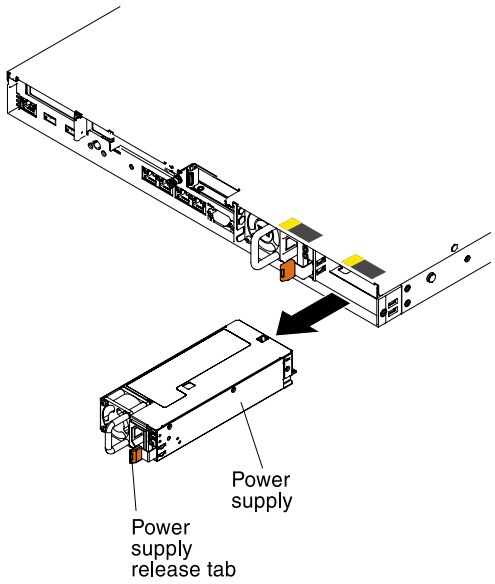

Figure 56. Power supply removal

If you are instructed to return the power supply, follow all packaging instructions, and use any packaging materials for shipping that are supplied to you.

Replacing a hot-swap ac power supply

Use this information to replace a hot-swap ac power supply.

The following notes describe the type of power supply that the server supports and other information that you must consider when you install a power supply:

- Before you install an additional power supply or replace a power supply with one of a different wattage, you may use the Power Configurator utility to determine current system power consumption. For more information and to download the utility, go to http://www-03.ibm.com/ systems/bladecenter/ resources/ powerconfig.html.
- The server comes with one hot-swap 12-volt output power supply that connects to power supply bay 1. The input voltage is 100-127 V ac or 200-240 V ac auto-sensing.
- Power supplies in the server must be with the same power rating or wattage to ensure that the server will operate correctly. For example, you cannot mix 750-watt and 1500-watt power supplies in the server.
- You cannot mix high-efficiency and non-high-efficiency power supplies in the server.
- These power supplies are designed for parallel operation. In the event of a power-supply failure, the redundant power supply continues to power the system. The server supports a maximum of two power supplies.

CAUTION:
The power control button on the device and the power switch on the power supply do not turn off the electrical current supplied to the device. The device also might have more than one power cord. To remove all electrical current from the device, ensure that all power cords are disconnected from the power source.

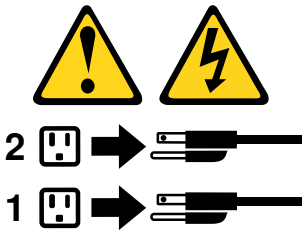

CAUTION:
Never remove the cover on a power supply or any part that has the following label attached.

Hazardous voltage, current, and energy levels are present inside any component that has this label attached. There are no serviceable parts inside these components. If you suspect a problem with one of these parts, contact a service technician.

To install a hot-swap ac power supply, complete the following steps:

Step 1. Read the safety information that begins on "Safety" on page v and "Installation guidelines" on page 108.

Step 2. Touch the static-protective package that contains the hot-swap power supply to any unpainted metal surface on the server; then, remove the power supply from the package and place it on a static-protective surface.

Step 3. Grasp the handle on the rear of the power supply and slide the power supply forward into the power-supply bay until it clicks. Make sure that the power supply connects firmly into the power-supply connector.

Attention: Do not mix 750-watt or 900-watt power supplies in the server.

Step 4. Route the power cord through the handle and cable tie if any, so that it does not accidentally become unplugged.

Step 5. Connect the power cord for the new power supply to the power-cord connector on the power supply.

Step 6. Connect the other end of the power cord to a properly grounded electrical outlet.

Step 7. Make sure that the ac power LED and the dc power LED on the ac power supply are lit, indicating that the power supply is operating correctly. The two green LEDs are to the right of the power-cord connector.

Step 8. If you are replacing a power supply to the server, attach the redundant power information label that comes with this option on the server cover near the power supplies.

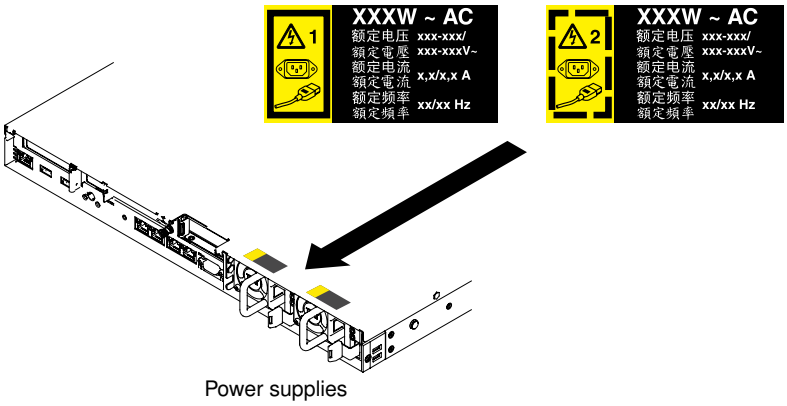

Figure 57. Redundant power information label

Removing a hot-swap hard disk drive backplane

Use this information to remove a hot-swap hard disk drive backplane.

To remove the hot-swap hard disk drive backplane, complete the following steps:

Step 1. Read the safety information that begins on "Safety" on page v and "Installation guidelines" on page 108.

Step 2. Turn off the server and peripheral devices and disconnect the power cords and all external cables, if necessary.

Step 3. Remove the cover (see "Removing the cover" on page 112).

Step 4. Remove the filler panels from the drive bay.

Step 5. Pull the hard disk drives out of the server slightly to disengage them from the hard disk drive backplane (see "Removing hot-swap hard disk drives" on page 118).

Step 6. Remove the hot-swap hard disk drive backplane.

a. Carefully lift the backplane out of the chassis by pulling outwards and lifting it up.

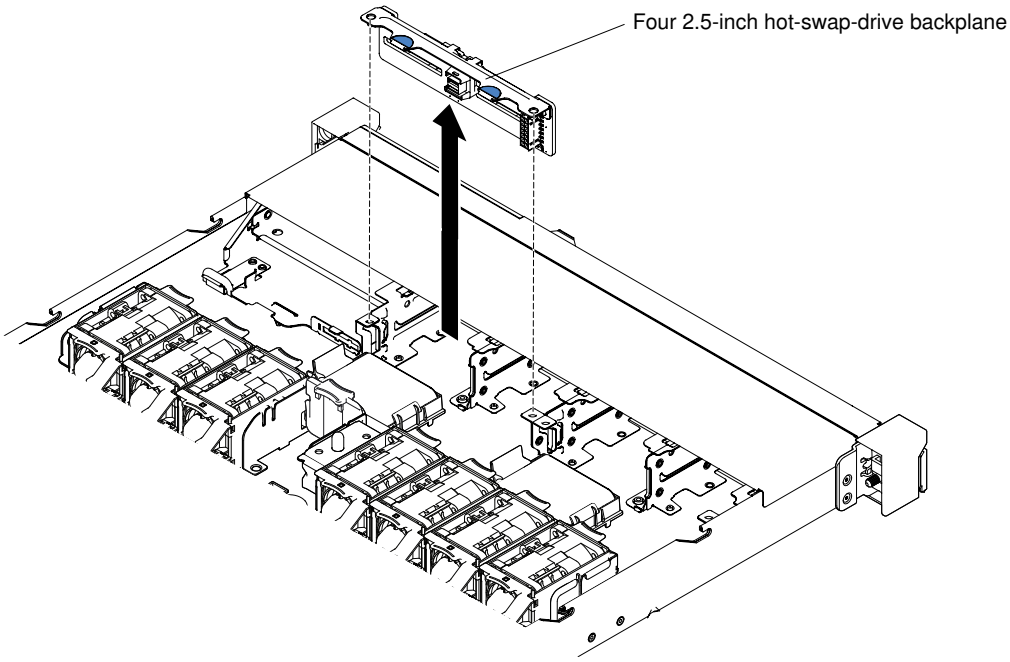

Figure 58. Four 2.5-inch hot-swap-drive backplane removal

Step 7. Disconnect all cables from the hard disk drive backplane.

If you are instructed to return the hard disk drive backplane, follow all packaging instructions, and use any packaging materials for shipping that are supplied to you.

Replacing a hot-swap hard disk drive backplane

Use this information to replace a hot-swap hard disk drive backplane.

To install the replacement hot-swap hard disk drive backplane, complete the following steps:

Step 1. Read the safety information that begins on "Safety" on page v and "Installation guidelines" on page 108.

Step 2. Reconnect the cables to the hard disk drive backplane.

Step 3. Install the hot-swap hard disk drive backplane.

a. Align the backplane with the slots on the chassis.

b. Carefully lower the hard disk drive backplane until it is fully seated in the chassis.

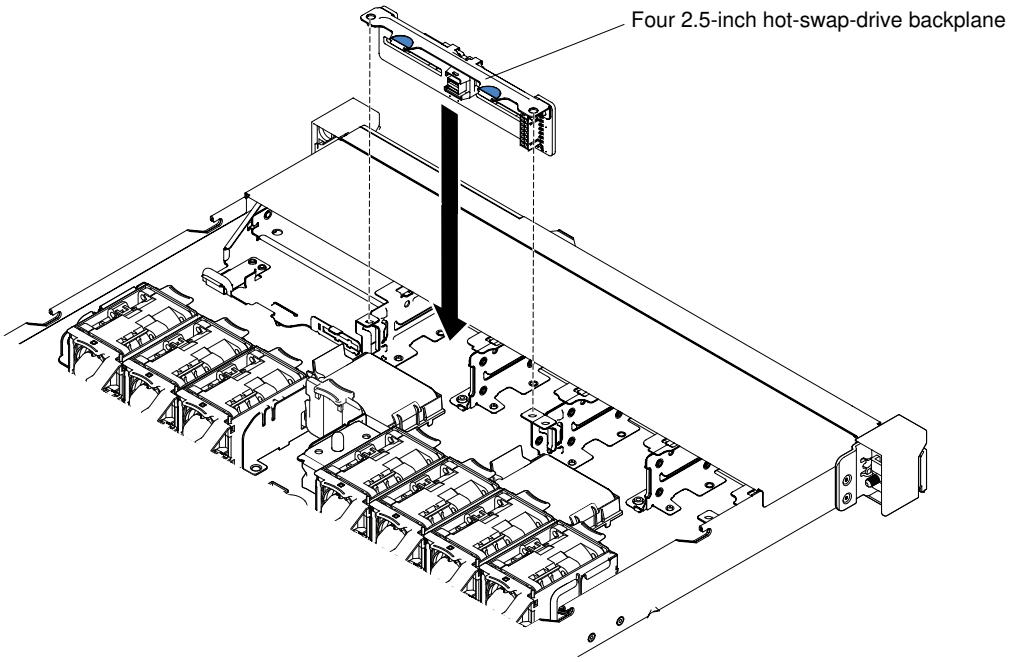

Figure 59. Four 2.5-inch hot-swap-drive backplane installation

Step 4. The following illustrations show the cable routing and connectors for the 2.5-inch hot-swap backplane.

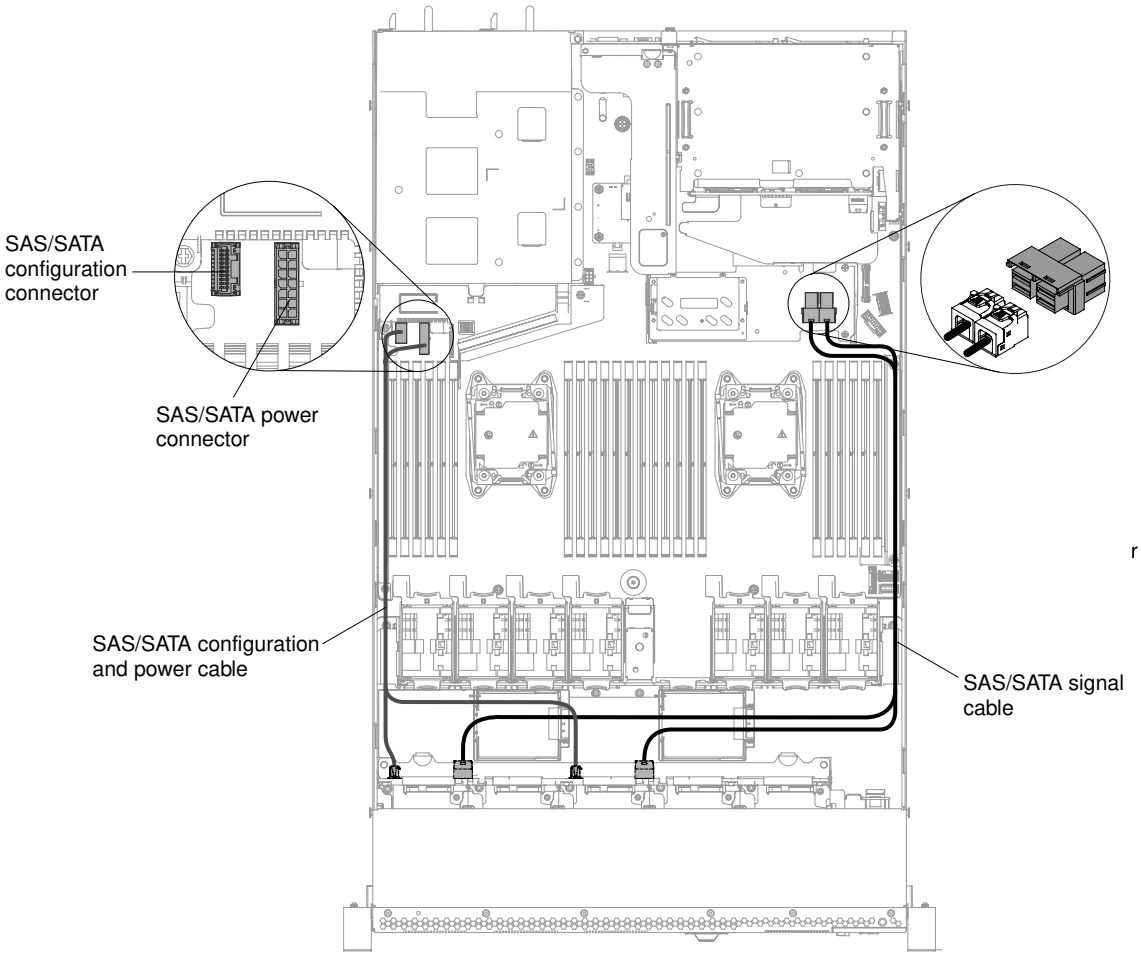

Figure 60. Eight 2.5-inch hot-swap backplane cable connection

Step 5. Reinstall the hard disk drives and filler panels (see "Replacing hot-swap hard disk drives" on page 119).

Step 6. Reinstall the cover (see "Replacing the cover" on page 113).

Step 7. Slide the server into the rack.

Step 8. Reconnect the power cords and any cables that you removed.

Step 9. Turn on the peripheral devices and the server.

Removing the coin-cell battery

Use this information to remove the coin-cell battery.

The following notes describe information that you must consider when replacing the coin-cell battery.

- Lenovo has designed this product with your safety in mind. The lithium battery must be handled correctly to avoid possible danger. If you replace the coin-cell battery, you must adhere to the following instructions.

  Note: In the U. S., call 1-800-IBM-4333 for information about battery disposal.

- If you replace the original lithium battery with a heavy-metal battery or a battery with heavy-metal components, be aware of the following environmental consideration. Batteries and accumulators that contain heavy metals must not be disposed of with normal domestic waste. They will be taken back free

of charge by the manufacturer, distributor, or representative, to be recycled or disposed of in a proper manner.

- To order replacement batteries, call 1-800-IBM-SERV within the United States, and 1-800-465-7999 or 1-800-465-6666 within Canada. Outside the U.S. and Canada, contact your Lenovo sales representative or Lenovo reseller.

  Note: After you replace the coin-cell battery, you must reconfigure the server and reset the system date and time.

CAUTION:
When replacing the lithium battery, use only Part Number 33F8354 or an equivalent type battery recommended by the manufacturer. If your system has a module containing a lithium battery, replace it only with the same module type made by the same manufacturer. The battery contains lithium and can explode if not properly used, handled, or disposed of.

Do not:

- **Throw or immerse into water**
- **Heat to more than 100°C (212°F)**
- **Repair or disassemble**

Dispose of the battery as required by local ordinances or regulations.

To remove the coin-cell battery, complete the following steps:

Step 1. Read the safety information that begins on "Safety" on page v and "Installation guidelines" on page 108.

Step 2. Turn off the server and peripheral devices and disconnect the power cords and all external cables, if necessary.

Step 3. Remove the cover (see "Removing the cover" on page 112).

Step 4. If necessary, lift PCI riser-card assembly 1 out of the chassis (see "Removing a PCI riser-card assembly" on page 128).

Step 5. Locate the coin-cell battery on the system board.

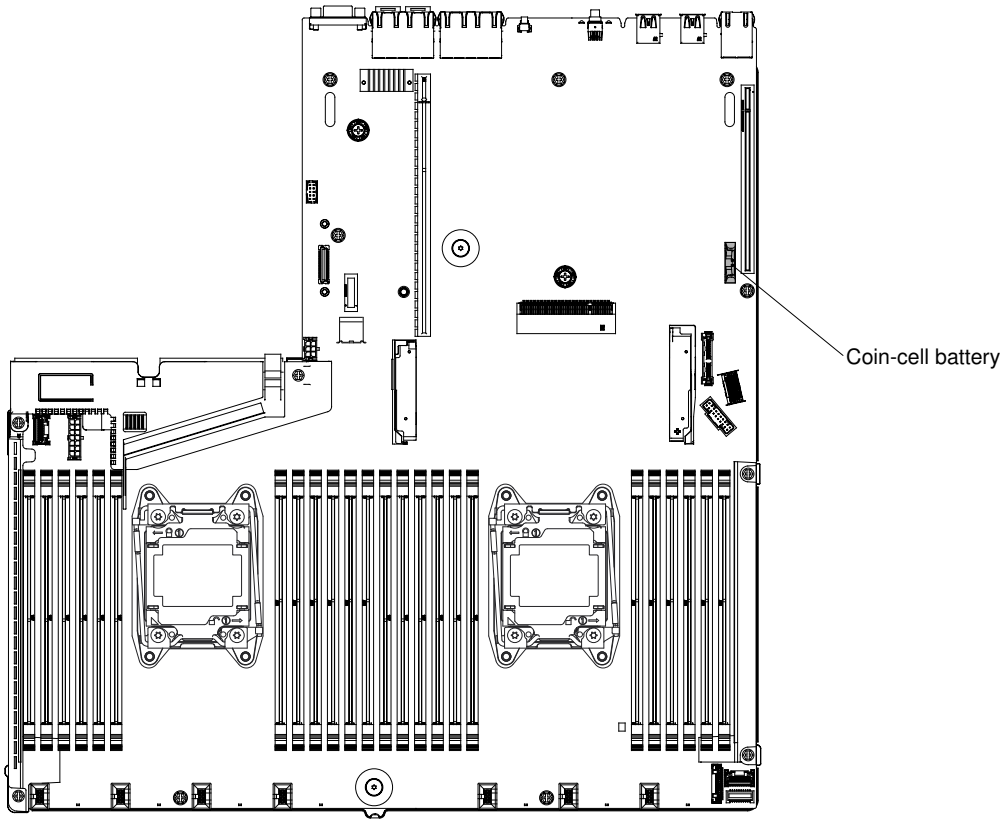

Figure 61. Location of the coin-cell battery on system board

a. If there is a rubber cover on the battery holder, use your fingers to lift the battery cover from the battery connector.

b. Use one finger to tilt the battery horizontally out of its socket, pushing it away from the socket.

Attention: Neither tilt nor push the battery by using excessive force.

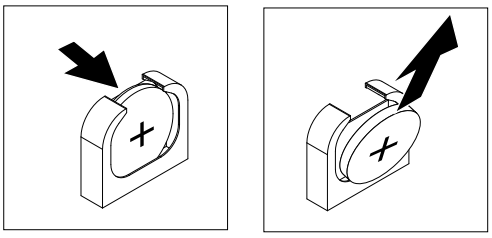

Figure 62. Coin-cell battery removal

c. Use your thumb and index finger to lift the battery from the socket.

Attention: Do not lift the battery by using excessive force. Failing to remove the battery properly may damage the socket on the system board. Any damage to the socket may require replacing the system board.

Step 6. Dispose of the battery as required by local ordinances or regulations. See the *Environmental Notices and User's Guide* on the *Documentation* CD for more information.

Replacing the coin-cell battery

Use this information to replace the coin-cell battery.

The following notes describe information that you must consider when replacing the coin-cell battery in the server.

- When replacing the coin-cell battery, you must replace it with a lithium battery of the same type from the same manufacturer.
- To order replacement batteries, call 1-800-426-7378 within the United States, and 1-800-465-7999 or 1-800-465-6666 within Canada. Outside the U.S. and Canada, contact your Lenovo sales representative or Lenovo reseller.
- After you replace the coin-cell battery, you must reconfigure the server and reset the system date and time.
- To avoid possible danger, read and follow the following safety statement.

CAUTION:
When replacing the lithium battery, use only Part Number 33F8354 or an equivalent type battery recommended by the manufacturer. If your system has a module containing a lithium battery, replace it only with the same module type made by the same manufacturer. The battery contains lithium and can explode if not properly used, handled, or disposed of.

Do not:

- **Throw or immerse into water**
- **Heat to more than 100°C (212°F)**
- **Repair or disassemble**

Dispose of the battery as required by local ordinances or regulations.

To install the replacement coin-cell battery, complete the following steps:

Step 1. Follow any special handling and installation instructions that come with the replacement battery.

Step 2. Read the safety information that begins on "Safety" on page v and "Installation guidelines" on page 108.

Step 3. Turn off the server and peripheral devices and disconnect the power cords and all external cables, if necessary.

Step 4. Remove the cover (see "Removing the cover" on page 112).

Step 5. If necessary, lift PCI riser-card assembly 1 out of the chassis (see "Removing a PCI riser-card assembly" on page 128).

Step 6. Locate the coin-cell battery connector on the system board.

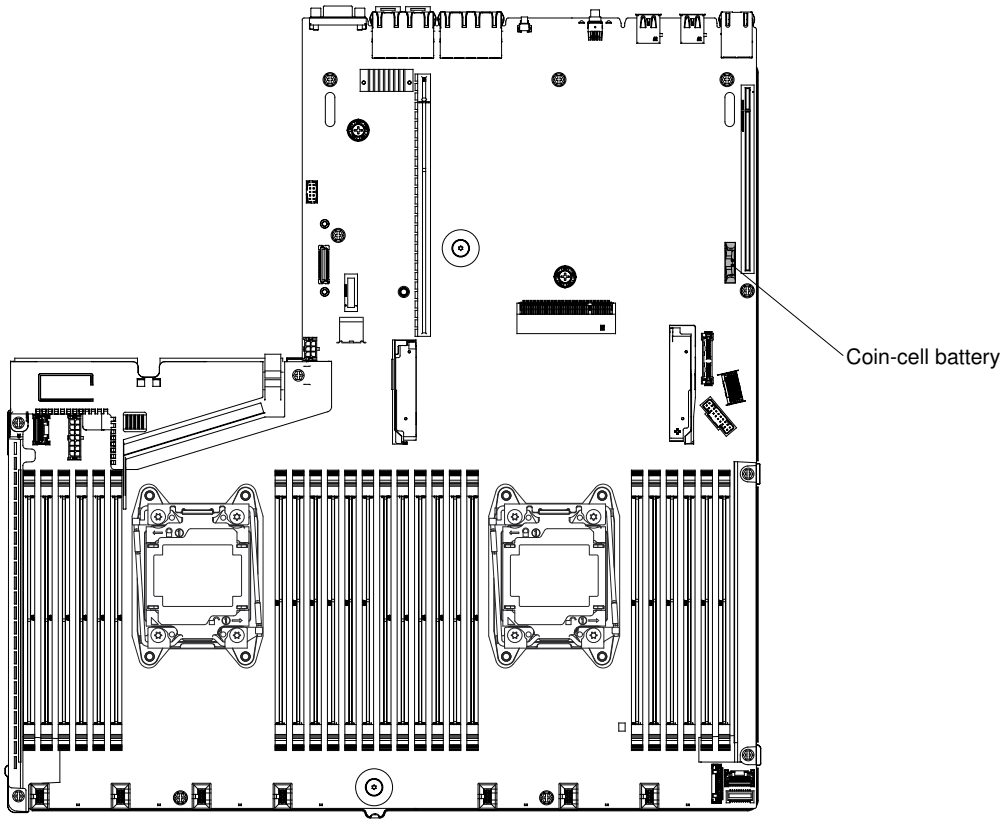

Figure 63. Location of the coin-cell battery connector on system board

a. Tilt the battery so that you can insert it into the socket on the side opposite the battery clip.

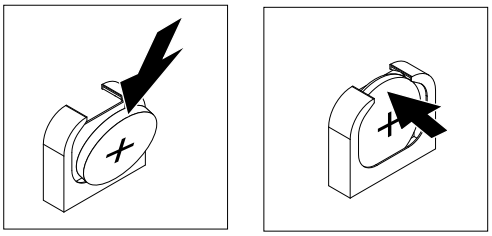

Figure 64. Coin-cell battery installation

b. Press the battery down into the socket until it clicks into place. Make sure that the battery clip holds the battery securely.

c. If you removed a rubber cover from the battery holder, use your fingers to install the battery cover on top of the battery connector.

Step 7. Reinstall PCI riser-card assembly 1 (see "Replacing a PCI riser-card assembly" on page 129), if necessary.

Step 8. Reinstall the cover (see "Replacing the cover" on page 113).

Step 9. Slide the server into the rack.

Step 10. Reconnect the external cables; then, reconnect the power cords and turn on the peripheral devices and the server.

Step 11. Start the Setup Utility and reset the configuration.

- Set the system date and time.
- Set the power-on password.
- Reconfigure the server.

See "Using the Setup Utility" on page 31 for details.

Removing the media cage

Use this information to remove the media cage.

To remove the media cage (also known as the front I/O cage), complete the following steps:

Step 1. Read the safety information that begins on "Safety" on page v and "Installation guidelines" on page 108.

Step 2. Turn off the server and peripheral devices and disconnect all power cords; then, remove the cover (see "Removing the cover" on page 112).

Step 3. Remove the air baffle (see "Removing the air baffle" on page 114).

Step 4. Disconnect the cables that may be attached to the system board. This may include the front USB connector assembly, front video connector assembly, operator information panel assembly, or LCD operating panel assembly cables. After disconnecting the cables, slightly lift the release latch; then, carefully push the media cage out of the chassis and set it aside.

Note: Remember the cable routing before disconnecting the cables from the system board.

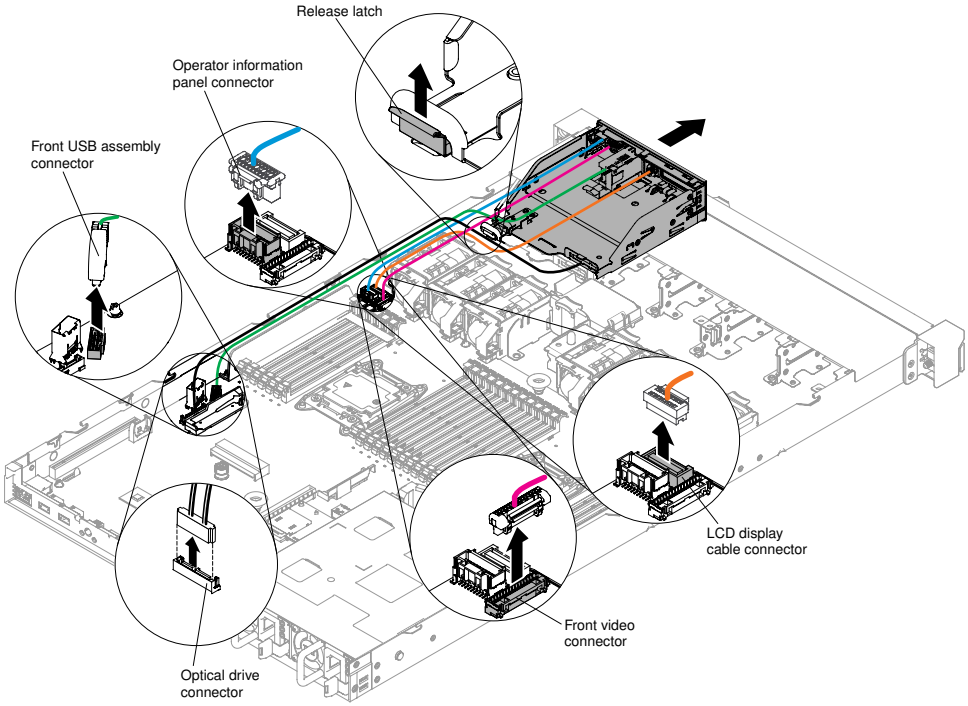

Figure 65. Media cage removal

Step 5. If you are instructed to return the media cage, follow all packaging instructions, and use any packaging materials for shipping that are supplied to you.

Replacing the media cage

Use this information to replace the media cage.

To install the media cage (also known as the front I/O cage), complete the following steps:

Step 1. Read the safety information that begins on "Safety" on page v and "Installation guidelines" on page 108.

Step 2. Carefully push the media cage back into the server; then reconnect the cables that were removed from the system board. This may include the front USB connector assembly, front video connector assembly, operator information panel assembly, or LCD operating panel assembly cables. Remember to insert the cables into the relevant cable clips and cable tie.

Note: Remember the cable routing before disconnecting the cables from the system board.

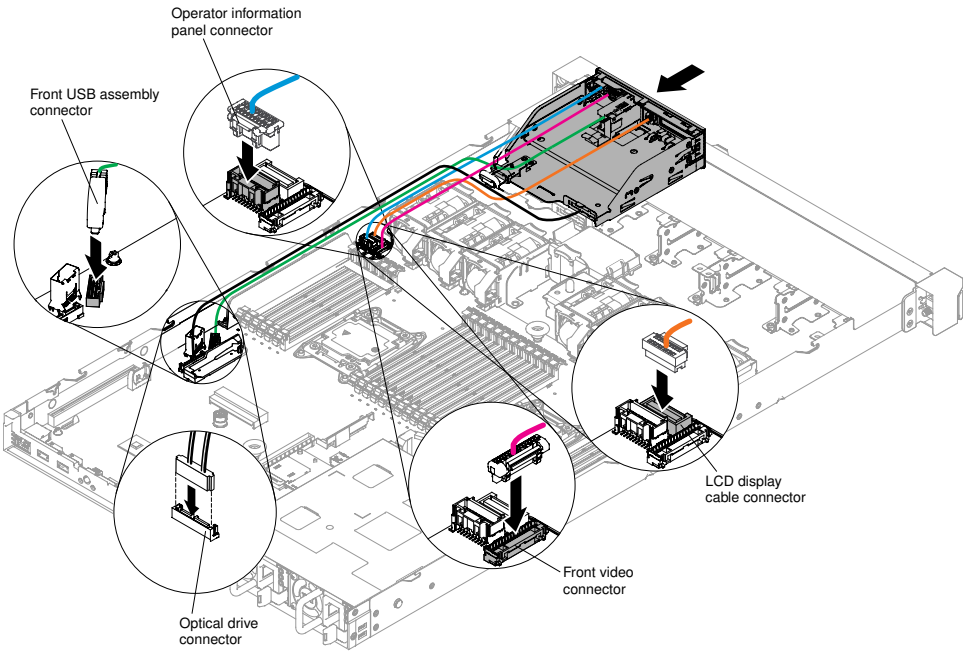

Figure 66. Media cage installation

Step 3. Reinstall the air baffle (see "Replacing the air baffle" on page 115).

Step 4. Reinstall the cover (see "Replacing the cover" on page 113).

Step 5. Slide the server into the rack.

Step 6. Reconnect the power cords and any cables that you removed.

Step 7. Turn on the peripheral devices and the server.

Removing the front USB connector assembly

Use this information to remove the front USB connector assembly.

To remove the front USB connector assembly, complete the following steps:

Step 1. Read the safety information that begins on "Safety" on page v and "Installation guidelines" on page 108.

Step 2. Turn off the server and peripheral devices and disconnect all power cords; then, remove the cover (see "Removing the cover" on page 112).

Step 3. Remove the media cage (see "Removing the media cage" on page 149).

Step 4. Remove the front USB connector assembly from the media cage.

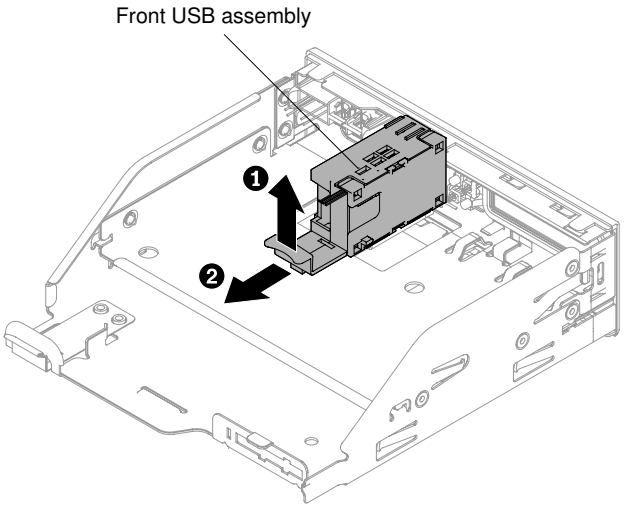

Figure 67. Front USB connector assembly removal for eight 2.5-inch hot-swap hard disk drive server configuration

Step 5. If you are instructed to return the front USB connector assembly, follow all packaging instructions, and use any packaging materials for shipping that are supplied to you.

Replacing the front USB connector assembly

Use this information to replace the front USB connector assembly.

To install the front USB connector assembly, complete the following steps:

Step 1. Read the safety information that begins on "Safety" on page v and "Installation guidelines" on page 108.

Step 2. Insert the front USB connector assembly into the media cage.

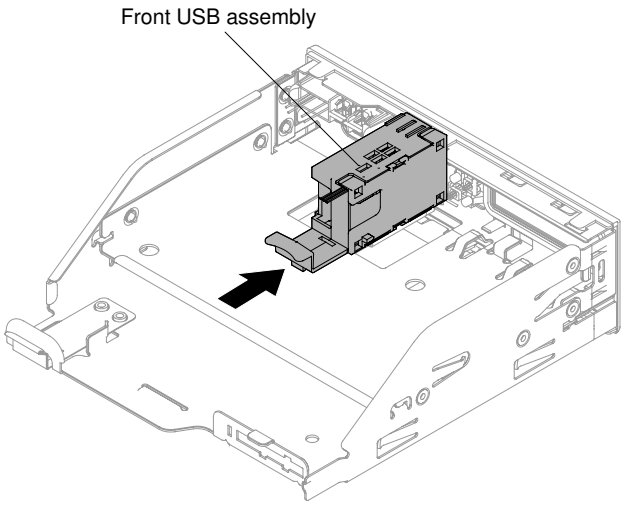

Figure 68. Front USB connector assembly installation for eight 2.5-inch hot-swap hard disk drive server configuration

Step 3. Carefully push the media cage back into the chassis (see "Replacing the media cage" on page 150). Remember to reconnect the cables that were removed from the system board.

Step 4. Reinstall the cover (see "Replacing the cover" on page 113).

Step 5. Reconnect the power cords and any cables that you removed.

Step 6. Slide the server into the rack.

Step 7. Turn on the peripheral devices and the server.

Removing the front video connector assembly

Use this information to remove the front video connector assembly.

To remove the front video connector assembly, complete the following steps:

Step 1. Read the safety information that begins on "Safety" on page v and "Installation guidelines" on page 108.

Step 2. Turn off the server and peripheral devices and disconnect the power cords and all external cables, if necessary.

Step 3. Remove the cover (see "Removing the cover" on page 112).

Step 4. Remove the media cage (see "Removing the media cage" on page 149).

Step 5. Loosen the screws that secure the front video connector assembly to the media cage; then, remove the assembly from the media cage.

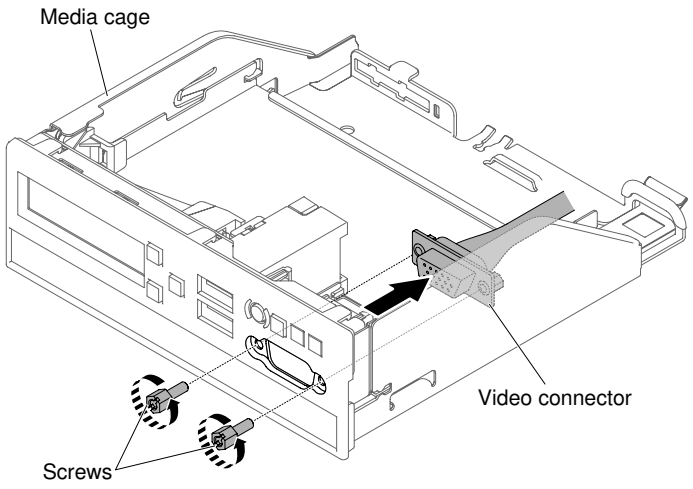

Figure 69. Front video connector assembly removal for eight 2.5-inch hot-swap hard disk drive server configuration

Step 6. If you are instructed to return the front video connector assembly, follow all packaging instructions, and use any packaging materials for shipping that are supplied to you.

Replacing the front video connector assembly

Use this information to replace the front video connector assembly.

To install the front video connector assembly, complete the following steps:

Step 1. Read the safety information that begins on "Safety" on page v and "Installation guidelines" on page 108.

Step 2. From inside the media cage, insert the front video connector assembly into the holes on the cage; then, install the screws to secure the assembly to the cage.

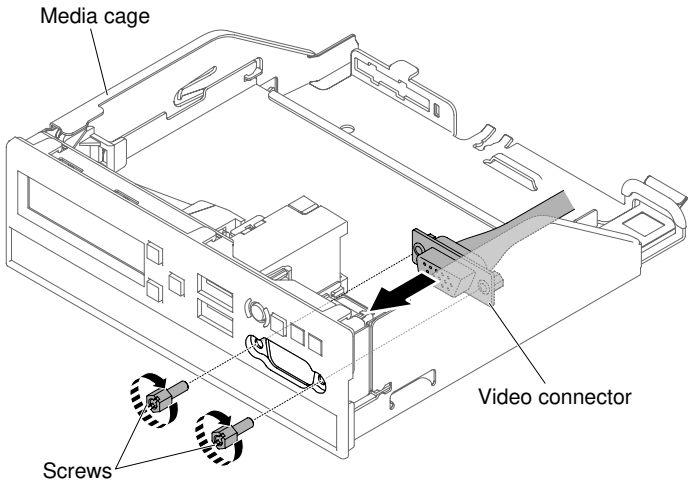

Figure 70. Front video connector assembly installation for eight 2.5-inch hot-swap hard disk drive server configuration

Step 3. Carefully push the media cage back into the chassis (see "Replacing the media cage" on page 150). Remember to reconnect the cables that were removed from the system board.

Step 4. Reinstall the cover (see “Replacing the cover” on page 113).

Step 5. Slide the server into the rack.

Step 6. Reconnect the power cords and any cables that you removed.

Step 7. Turn on the peripheral devices and the server.

Removing the operator information panel assembly

Use this information to remove the operator information panel assembly.

To remove the operator information panel assembly, complete the following steps:

Step 1. Read the safety information that begins on “Safety” on page v and “Installation guidelines” on page 108.

Step 2. Turn off the server and peripheral devices and disconnect all power cords; then, remove the cover (see “Removing the cover” on page 112).

Step 3. Remove the media cage (see “Removing the media cage” on page 149).

Step 4. Disconnect the cable from the back of the operator information panel assembly. This step applies to all types of server configurations.

Step 5. Remove the operator information panel assembly from the media cage.

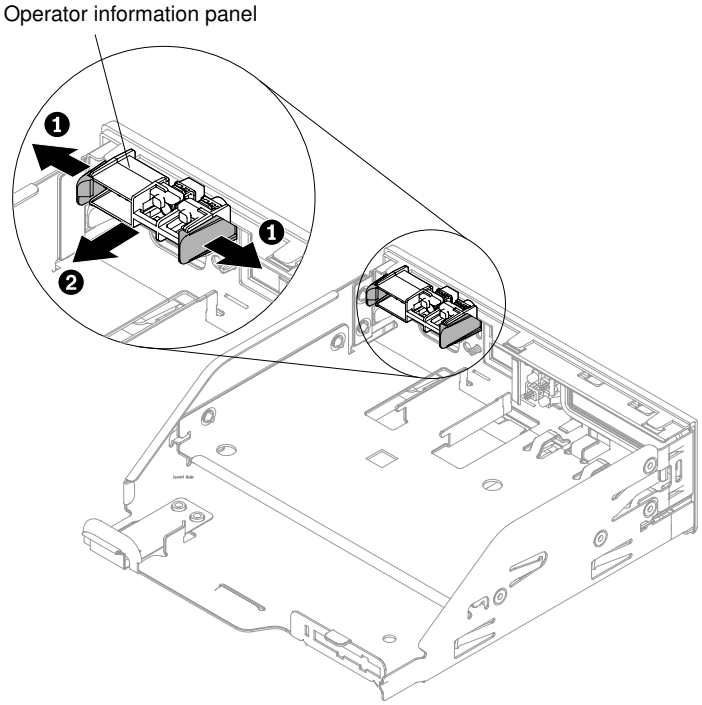

Figure 71. Operator information panel assembly removal from media cage

Step 6. If you are instructed to return the operator information panel assembly, follow all packaging instructions, and use any packaging materials for shipping that are supplied to you.

Replacing the operator information panel assembly

Use this information to replace the operator information panel assembly.

To install the operator information panel, complete the following steps:

Step 1. Read the safety information that begins on "Safety" on page v and "Installation guidelines" on page 108.

Step 2. Install the operator information panel assembly into the media cage.

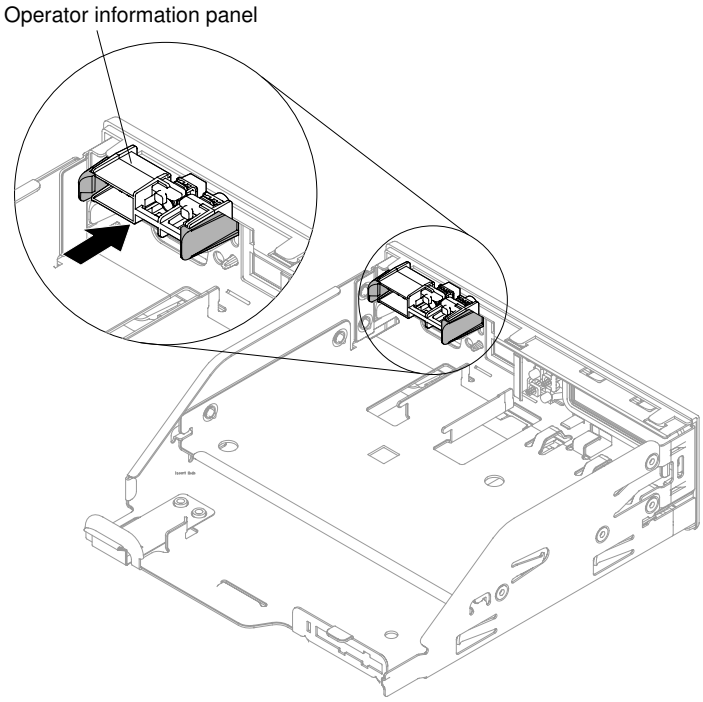

Figure 72. Operator information panel assembly installation into media cage

Step 3. Carefully push the media cage back into the chassis (see "Replacing the media cage" on page 150). Remember to reconnect the cables that were removed from the system board.

Step 4. Reconnect the operator information panel assembly cable to the operator information panel assembly.

Step 5. Reinstall the cover (see "Replacing the cover" on page 113).

Step 6. Slide the server into the rack.

Step 7. Reconnect the power cords and any cables that you removed.

Step 8. Turn on the peripheral devices and the server.

Removing the LCD system information display panel

Use this information to remove the LCD system information display panel.

To remove the LCD system information display panel, complete the following steps:

Step 1. Read the safety information that begins on "Safety" on page v and "Installation guidelines" on page 108.

Step 2. Turn off the server and peripheral devices and disconnect the power cords and all external cables, if necessary.

Step 3. Remove the cover (see "Removing the cover" on page 112).

Step 4. Remove the media cage (see "Removing the media cage" on page 149).

Step 5. Disconnect the cable from the back of the LCD system information display panel.

Step 6. ❶ Pull the tab on the LCD retention bracket to the left to disengage the retention bracket. ❷ Rotate the retention bracket to remove it from the server.

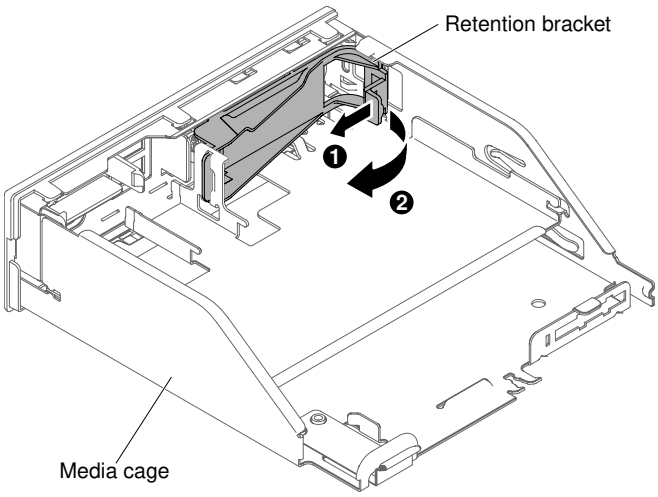

Figure 73. Retention bracket removal

Step 7. Carefully remove the LCD system information display panel out of the LCD panel assembly.

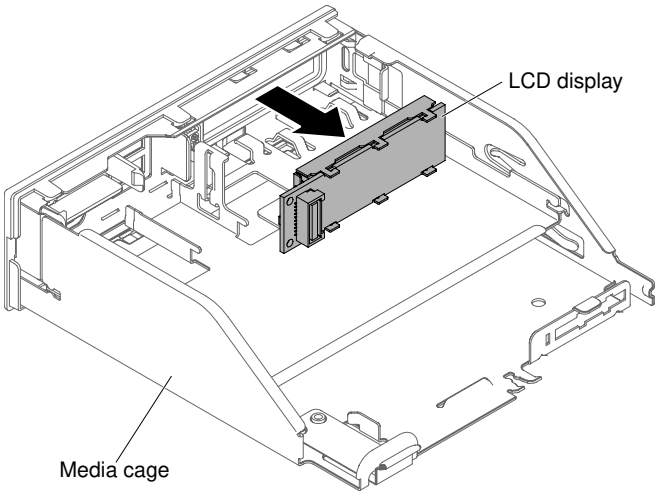

Figure 74. LCD system information display panel removal

Step 8. If you are instructed to return the LCD system information display panel, follow all packaging instructions, and use any packaging materials for shipping that are supplied to you.

Replacing the LCD system information display panel

Use this information to replace the LCD system information display panel.

To install the LCD system information display panel, complete the following steps:

Step 1. Read the safety information that begins on "Safety" on page v and "Installation guidelines" on page 108.

Step 2. Turn off the server and peripheral devices and disconnect the power cords and all external cables, if necessary.

Step 3. ❶ Pull the tab on the LCD retention bracket to the left to disengage the retention bracket. ❷ Rotate the retention bracket to remove it from the server.

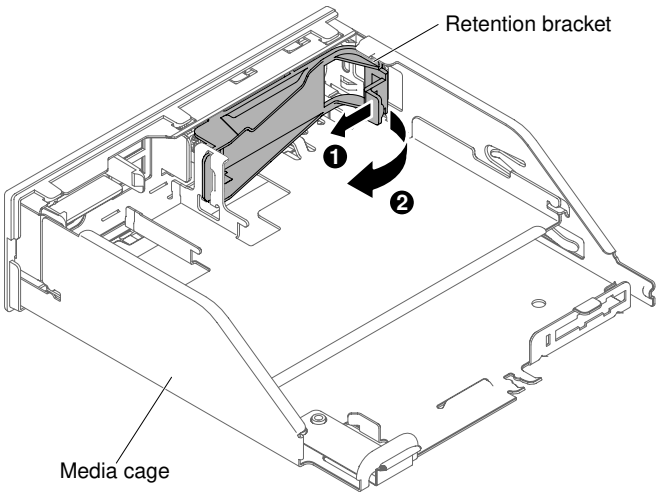

Figure 75. Retention bracket removal

Step 4. From inside the media cage, carefully insert the LCD system information display panel into place.

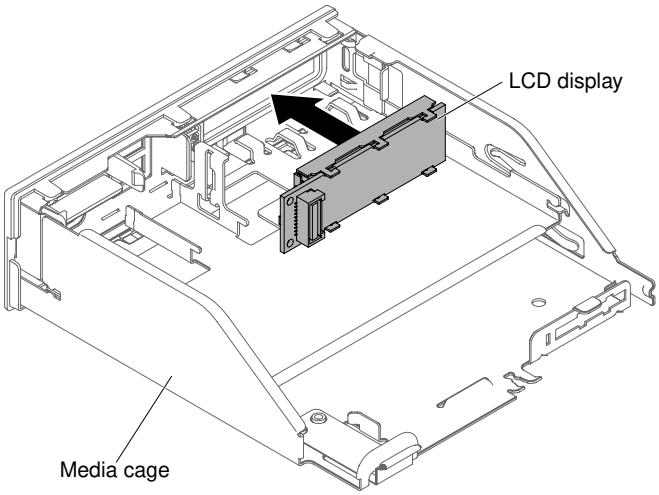

Figure 76. LCD system information display panel installation

Step 5. Carefully insert the tab on the retention bracket into the slot on the LCD panel assembly and rotate it counterclockwise until it clicks into place.

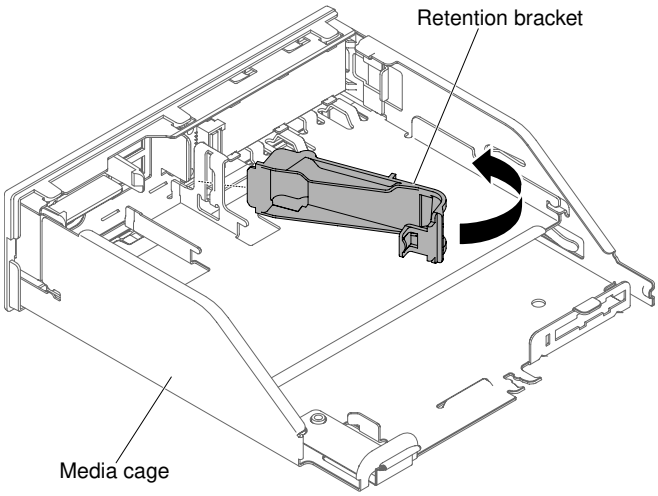

Figure 77. Retention bracket installation

Step 6. Connect the LCD system information display panel cable to the back of the LCD system information display panel.

Step 7. Carefully push the media cage back into the chassis (see "Replacing the media cage" on page 150). Remember to reconnect the cables that were removed from the system board.

Step 8. Reinstall the cover (see "Replacing the cover" on page 113).

Step 9. Slide the server into the rack.

Step 10. Reconnect the power cords and any cables that you removed.

Step 11. Turn on the peripheral devices and the server.

Removing the COM port bracket

Use this information to remove the COM port bracket.

To remove the COM port bracket, complete the following steps:

Step 1. Read the safety information that begins on "Safety" on page v and "Installation guidelines" on page 108.

Step 2. Turn off the server and peripheral devices and disconnect the power cords and all external cables, if necessary.

Step 3. Remove the cover (see "Removing the cover" on page 112).

Step 4. Disconnect the COM port bracket cable from the system board.

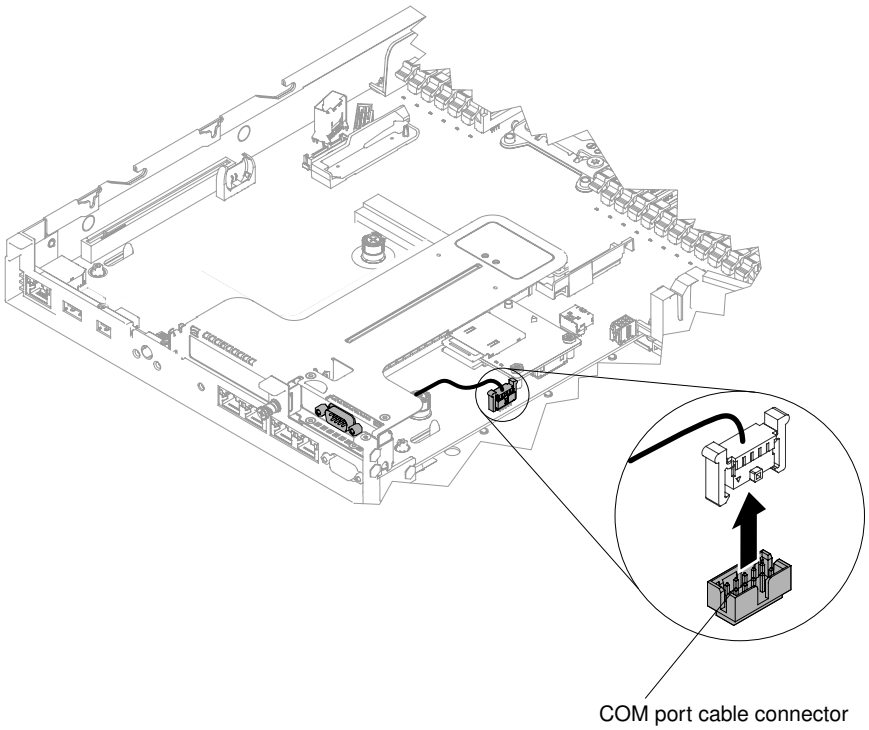

Figure 78. Disconnecting COM port bracket cable from system board

Step 5. Loosen the screws. Then, remove the COM port bracket connector from the opening of PCIe riser 2 assembly.

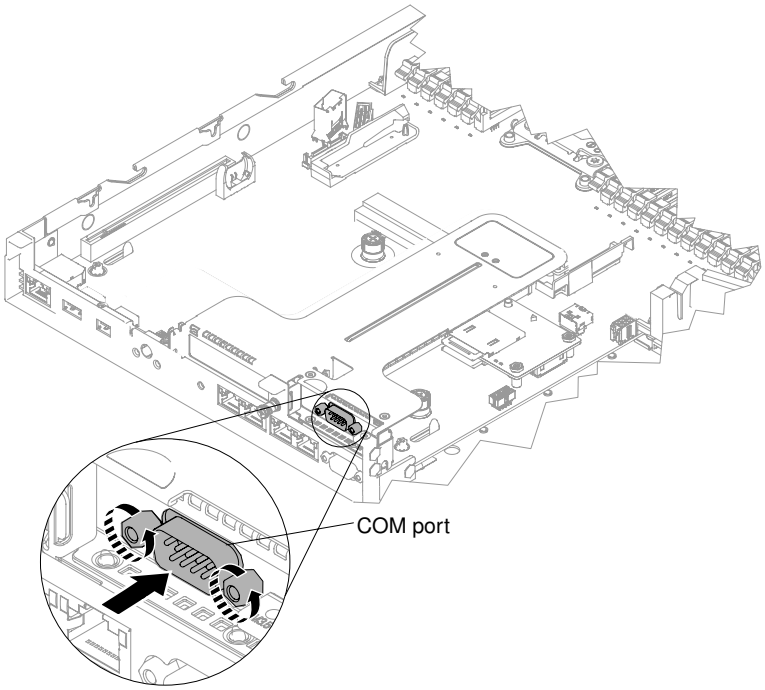

Figure 79. COM port bracket connector insertion into PCIe riser 2 assembly

Note: For some it may be easier to remove the COM port bracket by first slightly removing PCIe riser 2 assembly from the system board.

Step 6. If you are instructed to return the COM port bracket, follow all packaging instructions, and use any packaging materials for shipping that are supplied to you.

Replacing the COM port bracket

Use this information to replace the COM port bracket.

To install the COM port bracket, complete the following steps:

Step 1. Read the safety information that begins on "Safety" on page v and "Installation guidelines" on page 108.

Step 2. Turn off the server and peripheral devices and disconnect the power cords and all external cables.

Step 3. If necessary, remove PCIe riser 2 assembly from the system board (see "Removing a PCI riser-card assembly" on page 128).

Step 4. Remove the expansion slot cover from the PCIe riser 2 assembly if one is present; then, install the COM port expansion slot cover onto the assembly.

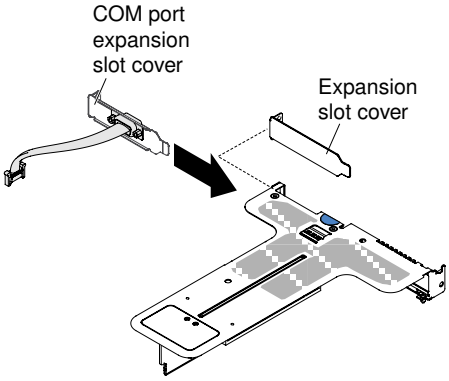

Figure 80. COM port expansion slot cover installation

Step 5. Insert PCIe riser 2 assembly onto the system board (see "Replacing a PCI riser-card assembly" on page 129).

Step 6. Insert the COM port bracket connector into the opening of PCIe riser 2 assembly from inside the server; then tighten the screws.

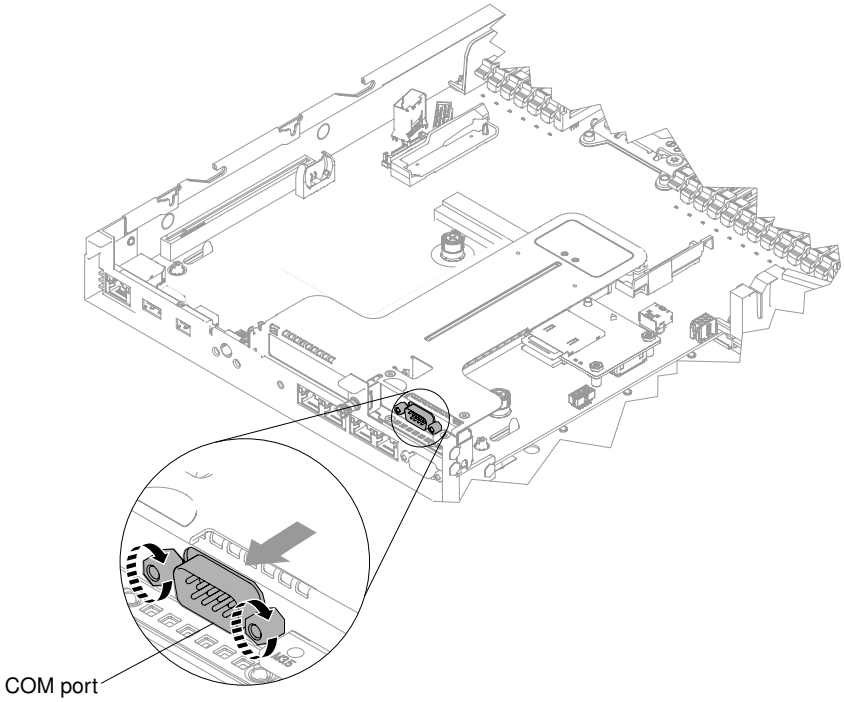

Figure 81. COM port bracket connector insertion into PCIe riser 2 assembly

Step 7. Connect the COM port bracket cable to the system board.

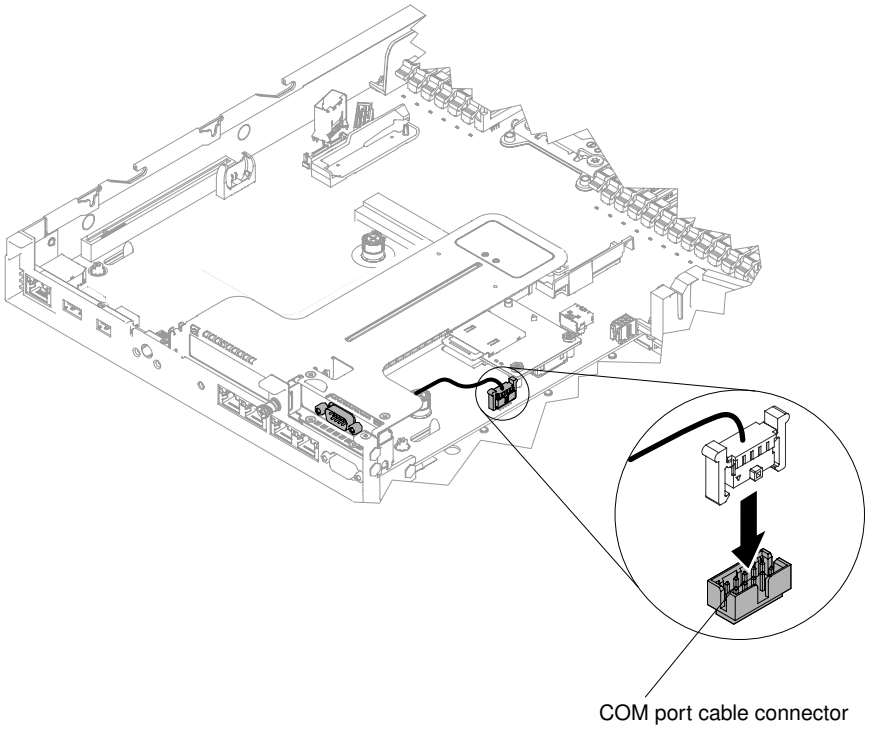

Figure 82. COM port bracket cable routing

Step 8. Reinstall the cover (see "Replacing the cover" on page 113).

Step 9. Slide the server into the rack.

Step 10. Reconnect the power cords and any cables that you removed.

Step 11. Turn on the peripheral devices and the server.

Removing and replacing Tier 2 CRUs

You may install a Tier 2 CRU yourself or request Lenovo to install it, at no additional charge, under the type of warranty service that is designated for your server.

The illustrations in this document might differ slightly from your hardware.

For service technician only: removing a microprocessor and heat sink

Use this information to remove a microprocessor and heat sink.

- Microprocessors are to be removed only by trained technicians.

  Important: Always use the microprocessor installation tool to remove a microprocessor. Failing to use the microprocessor installation tool may damage the microprocessor sockets on the system board. Any damage to the microprocessor sockets may require replacing the system board.
- Be extremely careful, the microprocessor socket contacts are very fragile. Do not touch the microprocessor socket contacts. Contaminants on the microprocessor contacts or microprocessor socket contacts, such as oil from your skin, can cause connection failures between the contacts and the socket.
- Do not allow the thermal grease on the microprocessor and heat sink to come in contact with anything. Contact with any surface can contaminate the thermal grease and the microprocessor socket.
- Do not use any tools or sharp objects to lift the locking levers on the microprocessor socket. Doing so might result in permanent damage to the system board.
- Each microprocessor socket must always contain either a socket cover or a microprocessor and heat sink.
- Be sure to use only the installation tools provided with the new microprocessor to remove or install the microprocessor. Do not use any other tool.
- When installing multiple microprocessors, open one microprocessor socket at a time to avoid damaging other microprocessor socket contacts.
- The microprocessor installation tool has the microprocessor installed on the tool, and may have a protective cover over the microprocessor. Do not use the tool, or remove the cover until you are instructed to do so.

Note: Be sure to use the installation tool that comes with your microprocessor installation tool assembly. The tool has two settings for installing two different sizes of microprocessors. The settings that are marked on the tool are “L” for smaller low core microprocessors, and “H” for larger high core microprocessors.

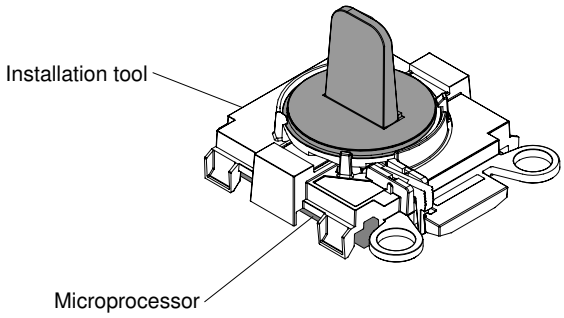

Microprocessor Installation Tool

Figure 83. Microprocessor installation tool

To remove a microprocessor and heat sink, complete the following steps:

Step 1. Read the safety information that begins on "Safety" on page v and "Installation guidelines" on page 108.

Step 2. Turn off the server and peripheral devices and disconnect all power cords.

Step 3. Remove the cover (see "Removing the cover" on page 112).

Step 4. Remove the air baffle (see "Removing the air baffle" on page 114).

Step 5. Locate the microprocessor to be removed (see "System-board internal connectors" on page 21).

Step 6. Remove the heat sink.

Attention: Do not touch the thermal material on the bottom of the heat sink. Touching the thermal material will contaminate it. If the thermal material on the microprocessor or heat sink becomes contaminated, you must wipe off the contaminated thermal material on the microprocessor or heat sink with the alcohol wipes and reapply clean thermal grease to the heat sink.

a. Use a screwdriver to loosen the captive screw on one side of the heat sink to break the seal with the microprocessor.

b. Loosen all the captive screws on the heat sink, rotating each screw one full turn until each screw is loose.

c. Gently lift the heat sink from the microprocessor. After removal, place the heat sink (with the thermal grease side up) on a clean, flat surface.

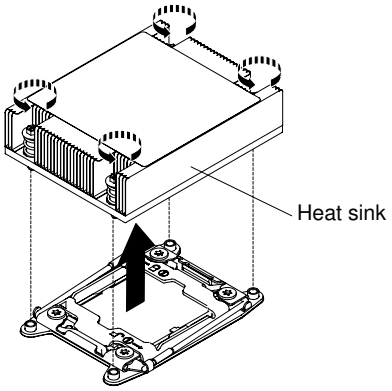

Figure 84. Heat sink removal

Step 7. Open the microprocessor socket release levers and retainer.

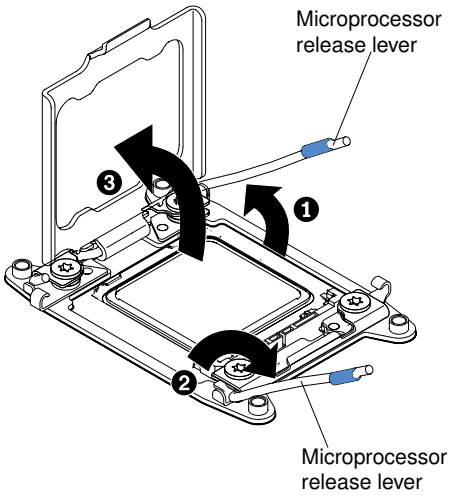

Figure 85. Microprocessor socket levers and retainer disengagement

a. Identify which release lever is labeled as the first release lever to open and open it.

b. Open the second release lever on the microprocessor socket.

c. Open the microprocessor retainer.

Attention: Do not touch the microprocessor contacts. Contaminants on the microprocessor contacts, such as oil from your skin, can cause connection failures between the contacts and the socket.

Step 8. Remove the microprocessor from the socket.

a. Select the empty installation tool and ensure that the handle is in the open position. If the installation tool handle is not in the open position, use the following instructions for your installation tool:

- When using the installation tool, **1** lift the interlock latch and hold it up while you **2** twist the microprocessor installation tool handle counterclockwise to the open position, and then release the interlock latch. The following illustration of the installation tool shows the location of the interlock latch and counterclockwise rotation of the handle before loading the microprocessor.

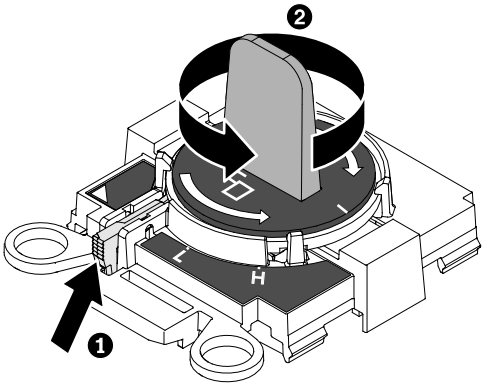

Figure 86. Installation tool handle adjustment

b. Align the installation tool with the screws, as shown in the following graphic, and lower the installation tool on the microprocessor. The installation tool rests flush on the socket only when it is aligned correctly.

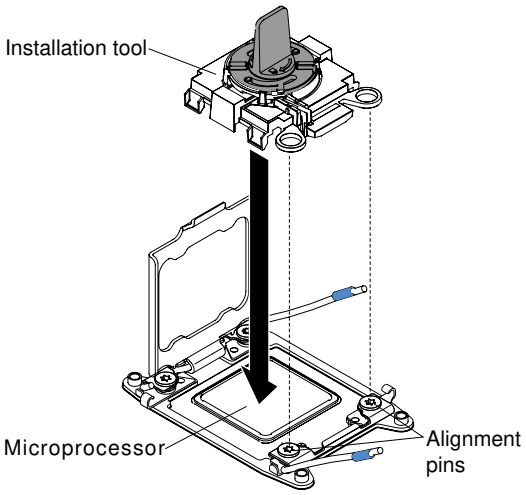

Figure 87. Installation tool alignment

c. Using the following instructions for your installation tool to remove the microprocessor.

- When using the installation tool, gently twist the handle of the installation tool clockwise until it locks in the “H” or “L” position, depending on the size of microprocessor, and then lift the microprocessor out of the socket.

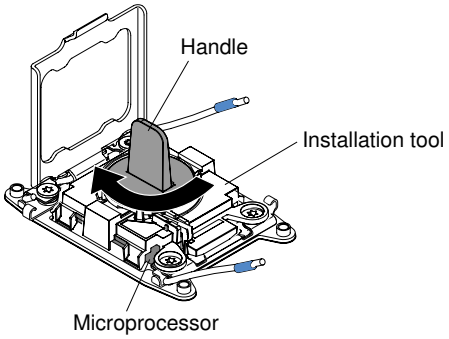

Figure 88. Installation tool handle adjustment

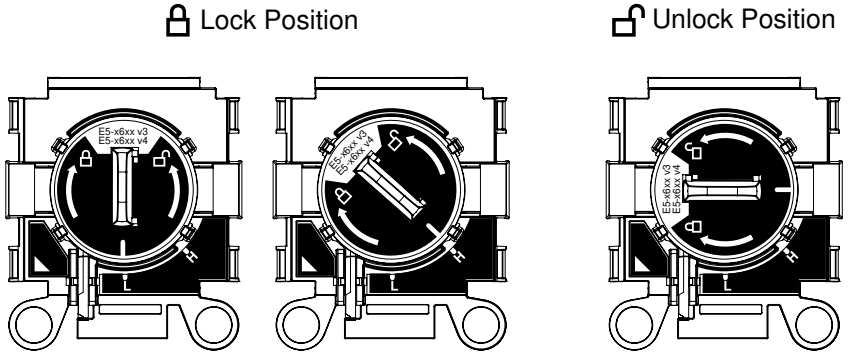

Figure 89. Installation Tool

d. Lift the microprocessor out of the socket.

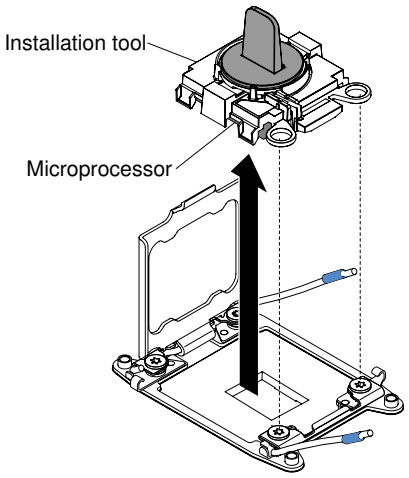

Figure 90. Installation tool removal

Step 9. Install the new microprocessor (see "For service technician only: replacing a microprocessor and heat sink" on page 166).

Attention: If you are replacing a microprocessor, use the empty installation tool that comes with the new microprocessor to remove the microprocessor.

Step 10. If you do not intend to install a microprocessor on the socket, install the socket cover that you removed before on the microprocessor socket.

Attention: The pins on the socket are fragile. Any damage to the pins may require replacing the system board.

If you are instructed to return the microprocessor, follow all packaging instructions, and use any packaging materials for shipping that are supplied to you.

For service technician only: replacing a microprocessor and heat sink

The following notes describe the type of microprocessor that the server supports and other information that you must consider when you install a microprocessor and heat sink.

- Microprocessors are to be installed only by trained technicians.

  Important: Always use the microprocessor installation tool to install a microprocessor. Failing to use the microprocessor installation tool may damage the microprocessor sockets on the system board. Any damage to the microprocessor sockets may require replacing the system board.
- Be extremely careful, the microprocessor socket contacts are very fragile. Do not touch the microprocessor socket contacts. Contaminants on the microprocessor contacts or microprocessor socket contacts, such as oil from your skin, can cause connection failures between the contacts and the socket.
- Do not allow the thermal grease on the microprocessor and heat sink to come in contact with anything. Contact with any surface can contaminate the thermal grease and the microprocessor socket.
- Do not use any tools or sharp objects to lift the locking levers on the microprocessor socket. Doing so might result in permanent damage to the system board.
- Each microprocessor socket must always contain either a socket cover or a microprocessor and heat sink.

- Be sure to use only the installation tools provided with the new microprocessor to remove or install the microprocessor. Do not use any other tool.
- When installing multiple microprocessors, open one microprocessor socket at a time to avoid damaging other microprocessor socket contacts.
- The server supports up to two multi-core microprocessors. See http://www.lenovo.com/ serverproven/ for a list of supported microprocessors.
- The first microprocessor must always be installed in microprocessor socket 1 on the system board.
- When one microprocessor is installed, the air baffle must be installed to provide proper system cooling.
- Do not remove the first microprocessor from the system board when you install the second microprocessor.
- When you install the second microprocessor, you must also install additional memory and the fan 6 and fan 8. See "Memory module installation" on page 121 for details about the installation sequence.
- Do not mix microprocessors with different cores in the same server.
- To ensure proper server operation when you install an additional microprocessor, use microprocessors that have the same QuickPath Interconnect (QPI) link speed, integrated memory controller frequency, core frequency, power segment, internal cache size, and type.
- Mixing microprocessors of different stepping levels within the same server model is supported.
- When mixing microprocessors with different stepping levels within the same server model, you do not have to install the microprocessor with lowest stepping level and features in microprocessor socket 1.
- Both microprocessor voltage regulator modules are integrated on the system board.
- Read the documentation that comes with the microprocessor to determine whether you have to update the server firmware. To download the latest level of server firmware and other code updates for your server, go to http://www.ibm.com/support/ fixcentral.
- The microprocessor speeds are automatically set for this server; therefore, you do not have to set any microprocessor frequency-selection jumpers or switches.
- If the thermal-grease protective cover (for example, a plastic cap or tape liner) is removed from the heat sink, do not touch the thermal grease on the bottom of the heat sink or set down the heat sink. For more information about applying or working with thermal grease, see "Thermal grease" on page 173.

  Note: Removing the heat sink from the microprocessor destroys the even distribution of the thermal grease and requires replacing the thermal grease.
- To order an additional optional microprocessor, contact your Lenovo sales representative or Lenovo reseller.
- The microprocessor installation tool has the microprocessor installed on the tool, and may have a protective cover over the microprocessor. Do not use the tool, or remove the cover until you are instructed to do so.

  Note: Be sure to use the installation tool that comes with your microprocessor installation tool assembly. The tool has two settings for installing two different sizes of microprocessors. The settings that are marked on the tool are "L" for smaller low core microprocessors, and "H" for larger high core microprocessors.

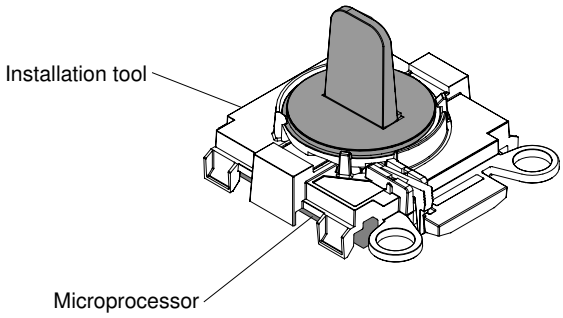

Microprocessor Installation Tool

Figure 91. Microprocessor installation tool

To replace a microprocessor and heat sink, complete the following steps:

Step 1. Read the safety information that begins on "Safety" on page v and "Installation guidelines" on page 108.

Step 2. Turn off the server and peripheral devices and disconnect the power cords and all external cables.

Attention: When you handle static-sensitive devices, take precautions to avoid damage from static electricity. For details about handling these devices, see "Handling static-sensitive devices" on page 110.

Step 3. Remove the cover (see "Removing the cover" on page 112).

Step 4. Remove the air baffle (see "Removing the air baffle" on page 114).

Step 5. Open the microprocessor socket release levers and retainer:

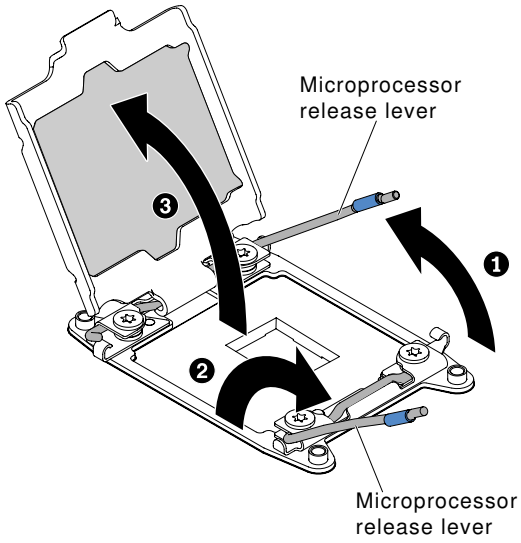

Figure 92. Microprocessor socket levers and retainer disengagement

a. Identify which release lever is labeled as the first release lever to open and open it.

b. Open the second release lever on the microprocessor socket.

c. Open the microprocessor retainer.

Attention: Do not touch the connectors on the microprocessor and the microprocessor socket.

Step 6. Install the microprocessor in the microprocessor socket:

a. Open the packaging that contains the new microprocessor installation tool assembly and carefully remove the installation tool assembly from the package. The microprocessor is preinstalled on the installation tool.

Note: Do not touch the microprocessor contacts. Contaminants on the microprocessor contacts, such as oil from your skin, can cause connection failures between the contacts and the socket.

b. Align the installation tool with the microprocessor socket. The installation tool rests flush on the socket only if properly aligned.

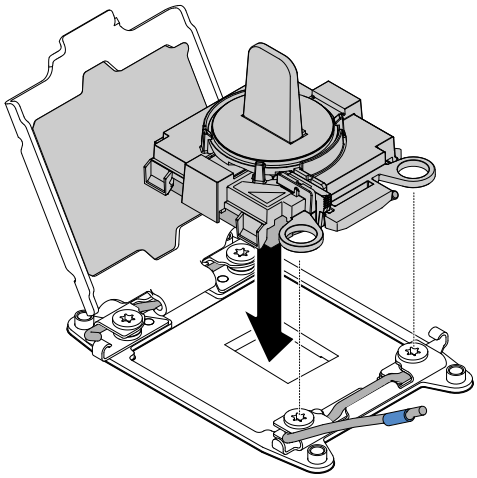

Figure 93. Installation tool alignment

c. Install the microprocessor using the following instructions for your installation tool.

- When using the installation tool, twist the handle of the installation tool assembly counterclockwise until the microprocessor is inserted into the socket, and lift the installation tool out of the socket.

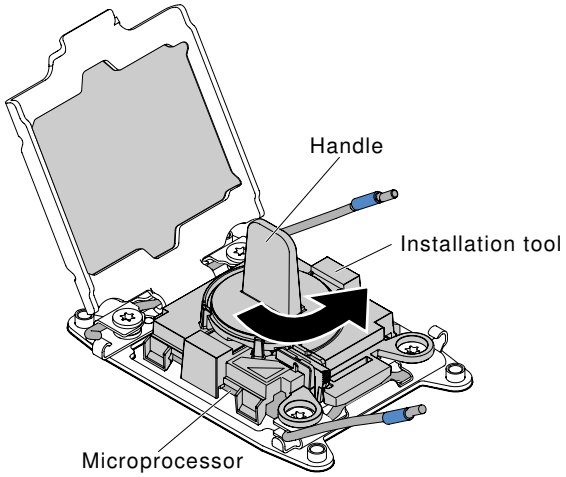

Figure 94. Installation tool handle adjustment

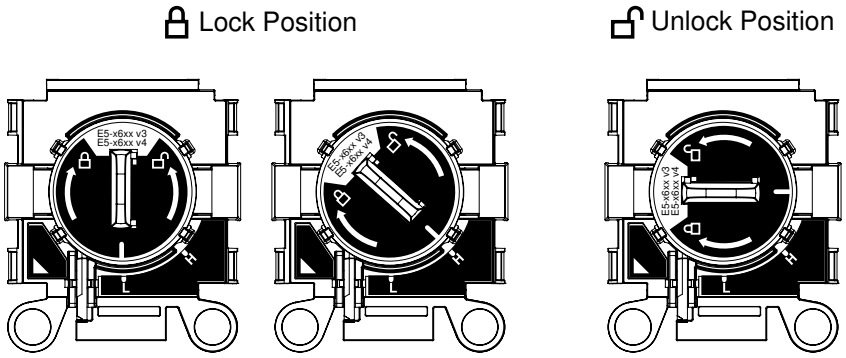

Figure 95. Installation Tool

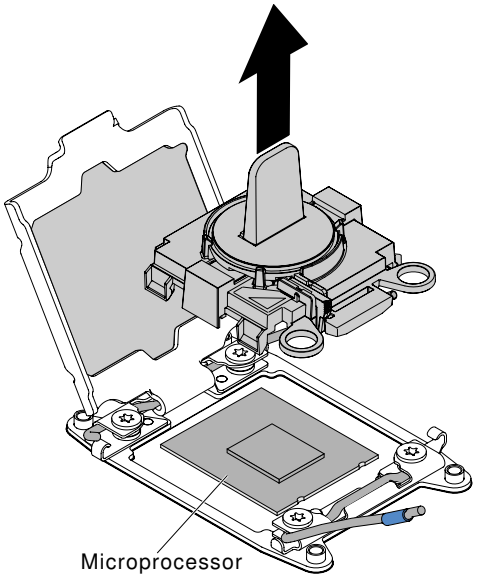

Figure 96. Installation tool removal

Attention:

- Do not press the microprocessor into the socket.
- Make sure that the microprocessor is oriented and aligned correctly in the socket before you try to close the microprocessor retainer.
- Do not touch the thermal material on the bottom of the heat sink or on top of the microprocessor. Touching the thermal material will contaminate it.

Step 7. Remove the microprocessor cover, tape, or label from the surface of the microprocessor socket, if one is present. Store the cover in a safe place.

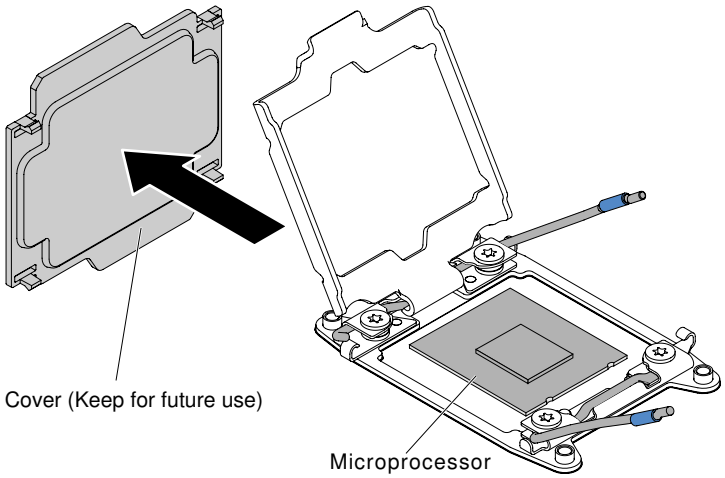

Figure 97. Socket cover removal

Attention: When you handle static-sensitive devices, take precautions to avoid damage from static electricity. For details about handling these devices, see "Handling static-sensitive devices" on page 110.

Step 8. Close the microprocessor socket release levers and retainer:

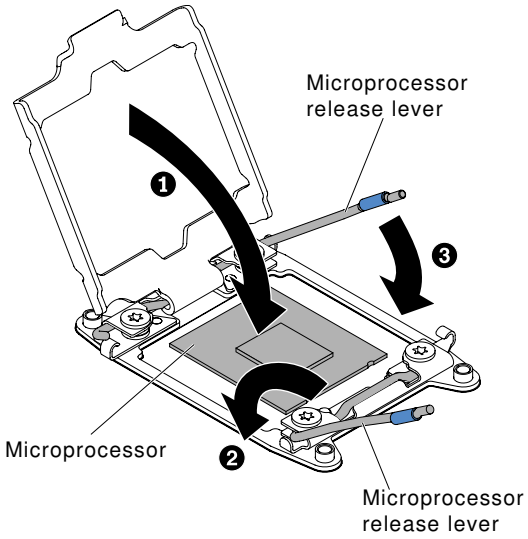

Figure 98. Microprocessor socket levers and retainer engagement

a. Close the microprocessor retainer on the microprocessor socket.

b. Identify which release lever is labeled as the first release lever to close and close it.

c. Close the second release lever on the microprocessor socket.

Step 9. Install the heat sink.

Attention:

- Do not set down the heat sink after you remove the plastic cover.
- Do not touch the thermal grease on the bottom of the heat sink after you remove the plastic cover. Touching the thermal grease will contaminate it. See "Thermal grease" on page 173 for more information.

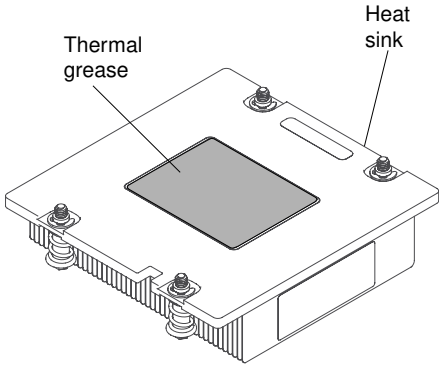

Figure 99. Thermal grease

a. Remove the plastic protective cover from the bottom of the heat sink.

b. Position the heat sink over the microprocessor. The heat sink is keyed to assist with proper alignment.

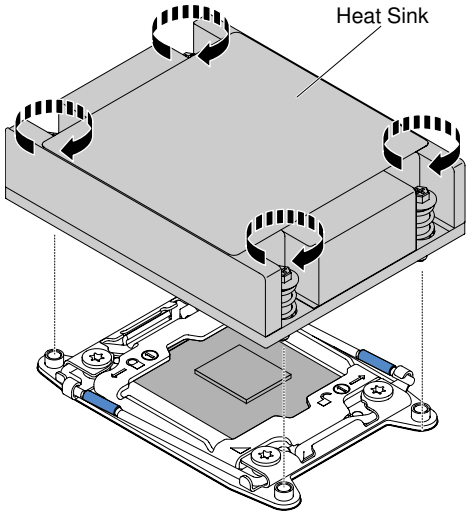

Figure 100. Heat sink installation

c. Align and place the heat sink on top of the microprocessor in the retention bracket, thermal material side down.

d. Press firmly on the heat sink.

e. Press down on the center of the heat sink; then, press firmly on the captive screws and tighten them, alternating between the screws in a figure-8 pattern as illustrated on the heat sink label until they are tightened. You can cause damage to the microprocessor if you tighten the screws on one side first, rather than rotating. Rotate each screw one full rotation at a time. Repeat this process until the screws are tightened.

Step 10. Reinstall the air baffle (see "Replacing the air baffle" on page 115).

Step 11. Reinstall the cover (see "Replacing the cover" on page 113).

Step 12. Slide the server into the rack.

Step 13. Reconnect the power cords and any cables that you removed.

Step 14. Turn on the peripheral devices and the server.

Thermal grease

The thermal grease must be replaced whenever the heat sink has been removed from the top of the microprocessor and is going to be reused or when debris is found in the grease.

When you are installing the heat sink on the same microprocessor that it was removed from, make sure that the following requirements are met:

- The thermal grease on the heat sink and microprocessor is not contaminated.
- Additional thermal grease is not added to the existing thermal grease on the heat sink and microprocessor.

Notes:

- Read the safety information that begins on "Safety" on page v.
- Read the "Installation guidelines" on page 108.
- Read "Handling static-sensitive devices" on page 110.

To replace damaged or contaminated thermal grease on the microprocessor and heat sink, complete the following steps:

Step 1. Place the heat sink on a clean work surface.

Step 2. Remove the cleaning pad from its package and unfold it completely.

Step 3. Use the cleaning pad to wipe the thermal grease from the bottom of the heat sink.

Note: Make sure that all of the thermal grease is removed.

Step 4. Use a clean area of the cleaning pad to wipe the thermal grease from the microprocessor; then, dispose of the cleaning pad after all of the thermal grease is removed.

Step 5. Use the thermal-grease syringe to place nine uniformly spaced dots of 0.02 ml each on the top of the microprocessor. The outermost dots must be within approximately 5 mm of the edge of the microprocessor; this is to ensure uniform distribution of the grease.

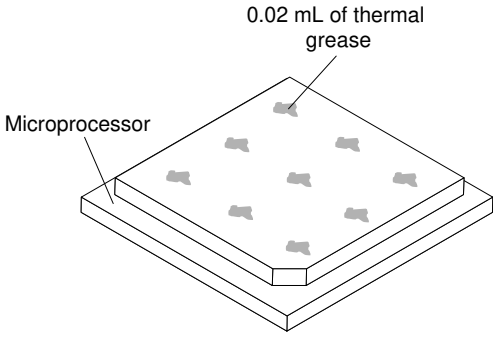

Figure 101. Thermal grease distribution

Note: If the grease is properly applied, approximately half of the grease will remain in the syringe.

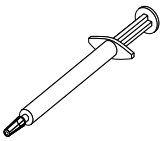

Figure 102. Syringe

Step 6. Install the heat sink onto the microprocessor.

For service technician only: removing the system board

Use this information to remove the system board.

Notes:

- When you replace the system board, you must either update the server with the latest firmware or restore the pre-existing firmware that the customer provides on a diskette or CD image. Make sure that you have the latest firmware or a copy of the pre-existing firmware before you proceed.
- When you replace the system board, make sure that you remove the Integrated Management Module Advanced Upgrade and place it on the new system board. For information about the Advanced Upgrade, see "Using the remote presence and blue-screen capture features" on page 37.
- Before you replace the system board, make sure that you back up any features on demand (FoD) keys that were enabled. Reactivate any Features on Demand features. Instructions for automating the activation of features and installing activation keys is in the *Features on Demand User's Guide*. To download the document, go to https://fod.lenovo.com/lkms, log in, and click **Help**.

To remove the system board, complete the following steps:

Step 1. Read the safety information that begins on "Safety" on page v, "Handling static-sensitive devices" on page 110, and "Installation guidelines" on page 108.

Step 2. Turn off the server and any attached devices.

Step 3. Turn off the peripheral devices and disconnect all power cords.

Note: When you replace the system board, you must either update the server with the latest firmware or restore the pre-existing firmware that the customer provides on a diskette or CD image. Make sure that you have the latest firmware or a copy of the pre-existing firmware before you proceed.

Step 4. Pull the power supplies out of the rear of the server, just enough to disengage them from the server.

Step 5. Remove the cover (see "Removing the cover" on page 112).

Step 6. Remove the air baffle (see "Removing the air baffle" on page 114).

Step 7. Remove all PCI riser-card assemblies and adapters (see "Removing a PCI riser-card assembly" on page 128 and "Removing an adapter" on page 132).

Step 8. Remove the memory modules and set them aside on a static-protective surface for reinstallation (see "Removing a memory module" on page 120).

Note: Make a note of the location of each DIMM as you remove it, so that you can later reinstall it in the same connector.

Step 9. Remove all heat sinks and microprocessors, and set them aside on a static-protective surface for reinstallation (see "For service technician only: removing a microprocessor and heat sink" on page 162).

Notes:

1. Remove the socket covers from the microprocessor sockets on the new system board and place them on the microprocessor sockets of the system board you are removing.
2. Do not allow the thermal grease to come in contact with anything, and keep each heat sink paired with its microprocessor for reinstallation. Contact with any surface can compromise the thermal grease and the microprocessor socket. A mismatch between the microprocessor and its original heat sink can require the installation of a new heat sink.

Step 10. Disconnect all cables from the system board. Make a list of each cable as you disconnect it; you can then use this as a checklist when you install the new system board.

Attention: Disengage all latches, release tabs or locks on cable connectors when you disconnect all cables from the system board. Failing to release them before removing the cables will damage the cable sockets on the system board. The cable sockets on the system board are fragile. Any damage to the cable sockets may require replacing the system board.

Step 11. Remove the hot-swap fans (see "Removing a thermal kit (hot-swap fan)" on page 135).

Step 12. Open the system board retention lever.

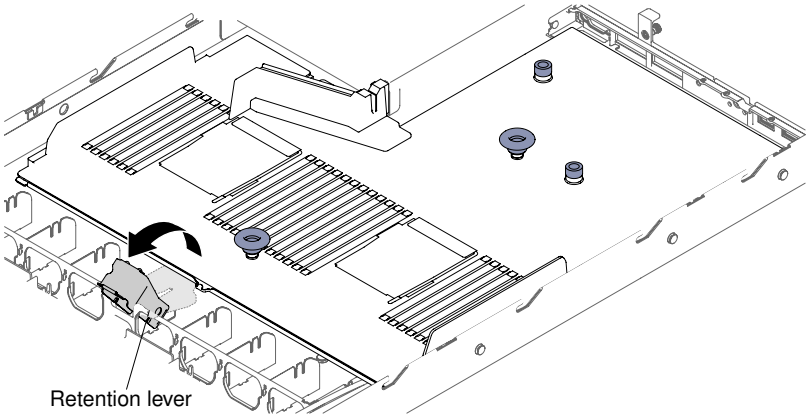

Figure 103. Retention lever location

Step 13. Loosen the two thumbscrews (one is near PCI slot 1 and one is near PCI slot 2).

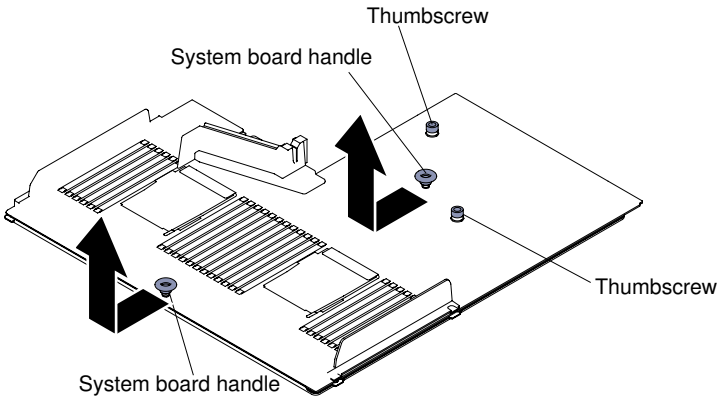

Figure 104. Thumbscrews disengagement

Step 14. Grasp the system board handles and slide the system board toward the front of the server until it stops.

Note: Make sure that the system board disengages from all system-board standoffs.

Step 15. Slightly push the system board toward the hot-swap fans; then, grasp the system board handles and carefully lift it up from the chassis, being careful not to damage any surrounding components.

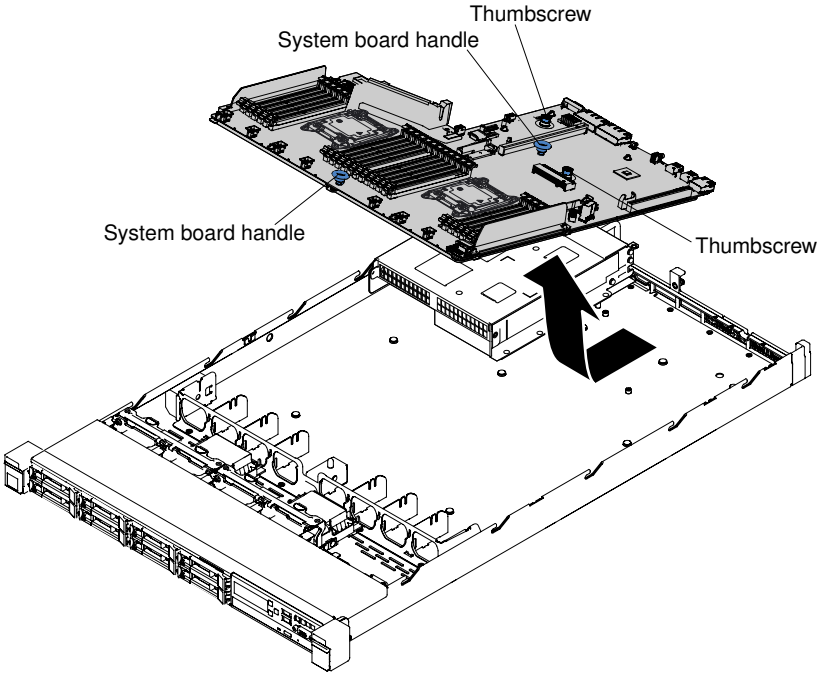

Figure 105. System board removal

Step 16. Remove the socket covers from the microprocessor sockets on the new system board and place them on the microprocessor sockets of the old system board that you are removing.

Step 17. If you are instructed to return the system board, follow all packaging instructions, and use any packaging materials for shipping that are supplied to you.

Attention: Make sure to place the socket covers for the microprocessor sockets on the system board before returning the system board.

For service technician only: replacing the system board

Use this information to replace the system board.

Important:

1. When you reassemble the components in the server, be sure to route all cables carefully so that they are not exposed to excessive pressure.
2. When you replace the system board, you must either update the server with the latest firmware or restore the pre-existing firmware from a diskette or CD image. Make sure that you have the latest firmware or a copy of the pre-existing firmware before you proceed. See "Updating the firmware" on page 29, "Updating the Universal Unique Identifier (UUID)" on page 41, and "Updating the DMI/SMBIOS data" on page 43 for more information.
3. When you replace the system board, make sure that you remove the Integrated Management Module Advanced Upgrade and place it on the new system board. For information about the Advanced Upgrade, see "Using the remote presence and blue-screen capture features" on page 37.
4. Reactivate any Features on Demand features. Instructions for automating the activation of features and installing activation keys is in the *Features on Demand User's Guide*. To download the document, go to https://fod.lenovo.com/lkms, log in, and click **Help**.
5. Some cluster solutions require specific code levels or coordinated code updates. If the device is part of a cluster solution, verify that the latest level of code is supported for the cluster solution before you update the code.

To install the system board, complete the following steps:

Step 1. Read the safety information that begins on "Safety" on page v, "Handling static-sensitive devices" on page 110, and "Installation guidelines" on page 108.

Step 2. Grasp the system board handles to align the system board with the chassis; then, lower the system board into the chassis and slide the system board toward the rear of the server until the system board is seated firmly into the locator pins on the chassis.

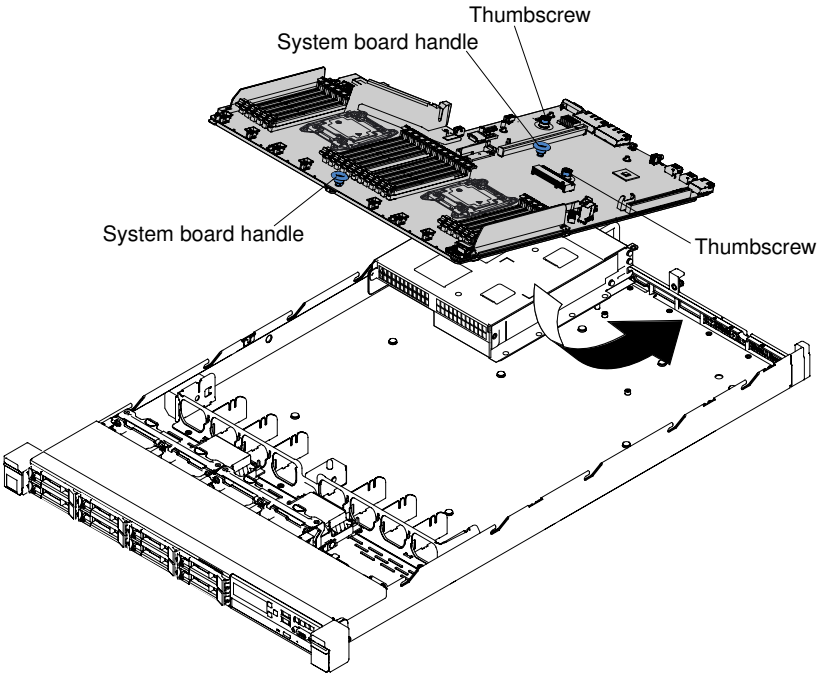

Figure 106. System board installation

Note: Make sure that all the system board standoffs engage the system board correctly.

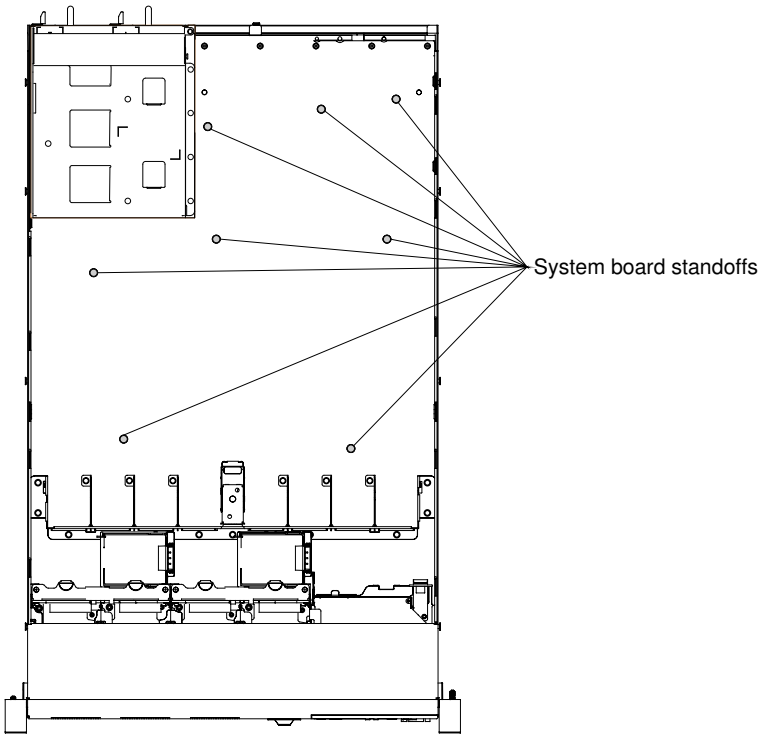

Figure 107. System-board standoffs

Step 3. Fasten the two thumbscrews (one is near PCI slot 2 and one is near the fan 5).

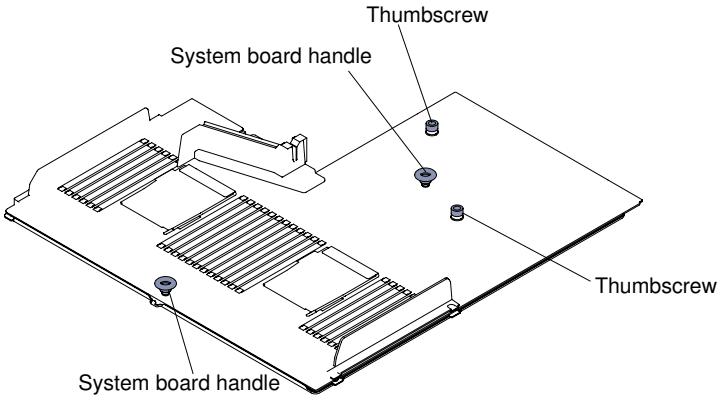

Figure 108. Thumbscrews engagement

Step 4. Close the system board retention lever.

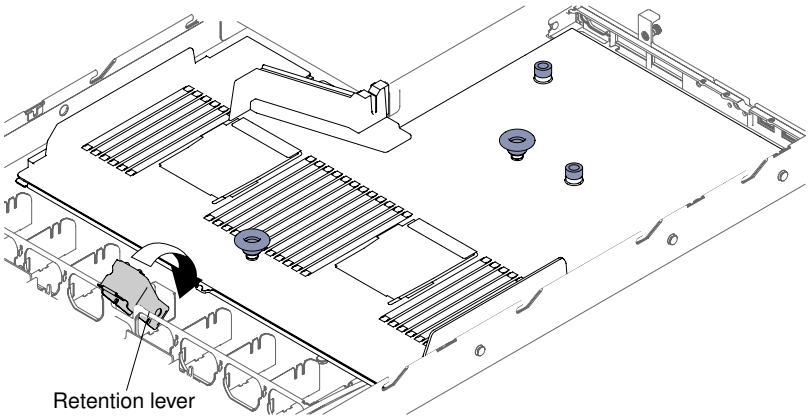

Figure 109. Retention lever location

Step 5. Reinstall the hot-swap fans (see "Replacing a thermal kit (hot-swap fan)" on page 136).

Step 6. Install the microprocessor and heat sink (see "For service technician only: replacing a microprocessor and heat sink" on page 166).

Step 7. Reinstall the memory modules (see "Memory module installation" on page 121).

Step 8. Reconnect the cables to the system board that you disconnected before.

Step 9. Reinstall the PCI riser-card assemblies and adapters, if any were installed (see "Replacing an adapter" on page 133 and "Replacing a PCI riser-card assembly" on page 129).

Step 10. Reinstall the air baffle (see "Replacing the air baffle" on page 115).

Step 11. Reinstall the cover (see "Replacing the cover" on page 113).

Step 12. Push the power supplies back into the server.

Step 13. Slide the server into the rack.

Step 14. Reconnect the power cords and any cables that you removed.

Step 15. Turn on the peripheral devices and the server.

Step 16. Start the Setup Utility and reset the configuration.

- Set the system date and time.
- Set the power-on password.
- Reconfigure the server.

See "Using the Setup Utility" on page 31 for more details.

Step 17. Update the UUID (see "Updating the Universal Unique Identifier (UUID)" on page 41).

Step 18. Update the DMI/SMBIOS (see "Updating the DMI/SMBIOS data" on page 43).

Step 19. Reactivate any Features on Demand features such as the Advanced IMM.

Step 20. Update the Nutanix specific configuration. See "Configuring the HX Series appliance" on page 45.

For service technician only: removing the SATADOM

Use this information to remove the SATADOM.

To remove the SATADOM, complete the following steps:

Step 1. Read the safety information that begins on "Safety" on page v and "Installation guidelines" on page 108.

Step 2. Turn off the server and peripheral devices and disconnect all power cords.

Step 3. Remove the server cover (see “Removing the cover” on page 112).

Step 4. Disconnect the cables that connect to the SATADOM.

Step 5. Press the release latch and then remove the SATADOM bracket in the direction as shown.

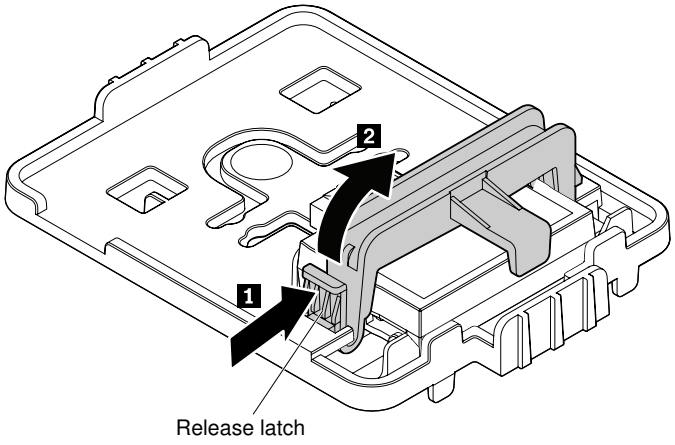

Figure 110. SATADOM bracket removal

Step 6. Remove the SATADOM from the holder.

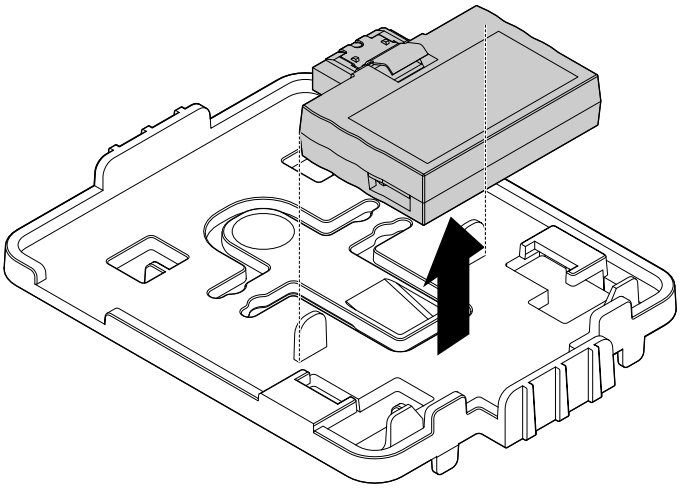

Figure 111. SATADOM removal

Step 7. If you are instructed to return the SATADOM, follow all packaging instructions, and use any packaging materials for shipping that are supplied to you.

For service technician only: replacing the SATADOM

Use this information to replace the SATADOM.

To install the SATADOM, complete the following steps:

Step 1. Read the safety information that begins on “Safety” on page v and “Installation guidelines” on page 108.

Step 2. Turn off the server and peripheral devices and disconnect the power cords and all external cables.

Step 3. Remove the cover (see “Removing the cover” on page 112).

Step 4. Install the SATADOM to the holder as shown.

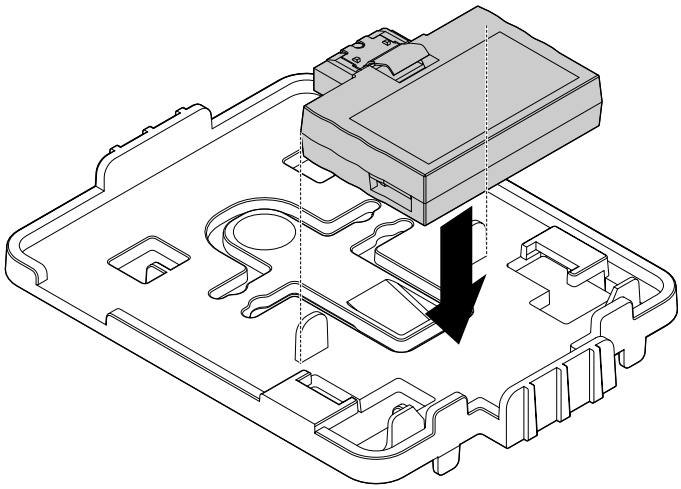

Figure 112. SATADOM installation

Step 5. Install the SATADOM bracket in the direction as shown until the release latch clicks into place.

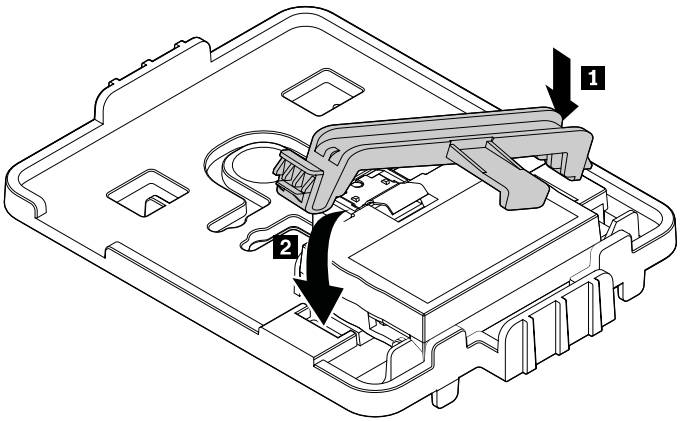

Figure 113. SATADOM bracket installation

Step 6. Connect the signal and power cable to the SATADOM.

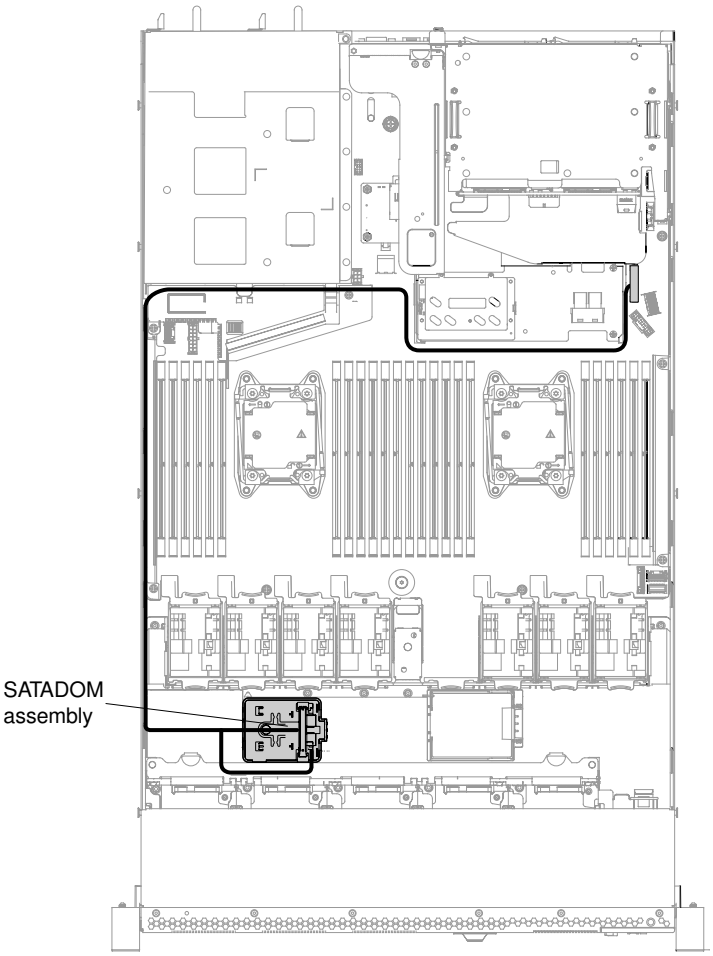

Figure 114. SATADOM cable connection

Step 7. Reinstall the cover (see "Replacing the cover" on page 113).

Step 8. Reconnect the power cords and any cables that you removed.

Step 9. Turn on the peripheral devices and the server.

Appendix A. Integrated management module 2.1 (IMM2.1) error messages

When a hardware event is detected by the IMM on the server, the IMM logs that event in the system-event log in the server.

For each event code, the following fields are displayed:

Event identifier
A hexadecimal identifier that uniquely identifies an event or class of events. In this documentation, the event identifiers are prefixed with 0x and followed by eight characters.

Event description
The logged message string that appears for an event. When the event string is displayed in the system-event log, information such as a specific component is displayed. In this documentation, that additional information appears as variables, such as [arg1] or [arg2].

Explanation
Additional information to explain why the event occurred.

Severity
An indication of the level of concern for the condition. In the system-event log, severity is abbreviated to the first character. The following severities can be displayed.

Info:
The event was recorded for audit purposes, usually a user action or a change of states that is normal behavior.

Warning:
The event is not as severe as an error, but if possible, the condition should be corrected before it becomes an error. It might also be a condition that requires additional monitoring or maintenance.

Error:
The event is a failure or critical condition that impairs service or an expected function.

Alert Category
Similar events are grouped together in categories. The alert category is in the following format:

severity - device

severity is one of the following severity levels:

- **Critical:** A key component in the server is no longer functioning.
- **Warning:** The event might progress to a critical level.
- **System:** The event is the result of a system error or a configuration change.

device is the specific device in the server that caused the event to be generated.

Serviceable
Whether user action is required to correct the problem.

CIM Information
The prefix of the message ID and the sequence number that is used by the CIM message registry.

SNMP Trap ID
The SNMP trap ID that is found in the SNMP alert management information base (MIB).

© Copyright Lenovo 2016, 2023

Automatically contact Service

If this field is set to **Yes**, and you have enabled Electronic Service Agent (ESA), Lenovo Support will be notified automatically if the event is generated.

While you wait for Lenovo Support to call, you can perform the recommended actions for the event.

User response

The actions that you should perform to solve the event.

Perform the steps listed in this section in the order shown until the problem is solved. After you perform all of the actions that are described in this field, if you cannot solve the problem, contact Lenovo Support.

Note: This list includes error codes and messages that might not apply to this machine type and model.

The following is the list of IMM2.1 error messages and suggested actions to correct the detected server problems. For more information about IMM2.1, see the *Integrated Management Module II User's Guide* at https://pubs.lenovo.com/imm2/product_page.html.

IMM Events that automatically notify Support

You can configure the Integrated Management Module II (IMM2) to automatically notify Support (also known as *call home*) if certain types of errors are encountered. If you have configured this function, see the table for a list of events that automatically notify Support.

Table 33. Events that automatically notify Support

Event ID	Message String	Automatically Notify Support
40000086-00000000	Test Call Home Generated by user [arg1].	Yes
40000087-00000000	Manual Call Home by user [arg1]: [arg2].	Yes
400000cb-00000000	The RAID controller has problem with the battery. Please contact technical support to resolve this issue.([arg1],[arg2],[arg3],[arg4],[arg5])	Yes
400000cc-00000000	The RAID controller detected unrecoverable error. The controller needs replacement.([arg1],[arg2],[arg3],[arg4],[arg5])	Yes
400000d5-00000000	One or more virtual drives have problem. Please contact technical support to resolve this issue.([arg1],[arg2],[arg3],[arg4],[arg5])	Yes
400000d6-00000000	Drive error was detected by RAID controller. Please contact technical support to resolve this issue.([arg1],[arg2],[arg3],[arg4],[arg5])	Yes
80010202-0701ffff	Numeric sensor [NumericSensorElementName] going low (lower critical) has asserted. (CMOS Battery)	Yes
80010902-0701ffff	Numeric sensor [NumericSensorElementName] going high (upper critical) has asserted. (SysBrd 12V)	Yes
806f0021-2201ffff	Fault in slot [PhysicalConnectorSystemElementName] on system [ComputerSystemElementName]. (No Op ROM Space)	Yes
806f0021-2582ffff	Fault in slot [PhysicalConnectorSystemElementName] on system [ComputerSystemElementName]. (All PCI Error)	Yes

Table 33. Events that automatically notify Support (continued)

Event ID	Message String	Automatically Notify Support
806f0021-2c01ffff	Fault in slot [PhysicalConnectorSystemElementName] on system [ComputerSystemElementName]. (ML2 Card Fault)	Yes
806f0021-3001ffff	Fault in slot [PhysicalConnectorSystemElementName] on system [ComputerSystemElementName]. (Internal RAID)	Yes
806f0021-3002ffff	Fault in slot [PhysicalConnectorSystemElementName] on system [ComputerSystemElementName]. (PCI 2)	Yes
806f0021-3003ffff	Fault in slot [PhysicalConnectorSystemElementName] on system [ComputerSystemElementName]. (PCI 3)	Yes
806f0108-0a01ffff	[PowerSupplyElementName] has Failed. (Power Supply 1)	Yes
806f0108-0a02ffff	[PowerSupplyElementName] has Failed. (Power Supply 2)	Yes
806f010c-2001ffff	Uncorrectable error detected for [PhysicalMemoryElementName] on Subsystem [MemoryElementName]. (DIMM 1)	Yes
806f010c-2002ffff	Uncorrectable error detected for [PhysicalMemoryElementName] on Subsystem [MemoryElementName]. (DIMM 2)	Yes
806f010c-2003ffff	Uncorrectable error detected for [PhysicalMemoryElementName] on Subsystem [MemoryElementName]. (DIMM 3)	Yes
806f010c-2004ffff	Uncorrectable error detected for [PhysicalMemoryElementName] on Subsystem [MemoryElementName]. (DIMM 4)	Yes
806f010c-2005ffff	Uncorrectable error detected for [PhysicalMemoryElementName] on Subsystem [MemoryElementName]. (DIMM 5)	Yes
806f010c-2006ffff	Uncorrectable error detected for [PhysicalMemoryElementName] on Subsystem [MemoryElementName]. (DIMM 6)	Yes
806f010c-2007ffff	Uncorrectable error detected for [PhysicalMemoryElementName] on Subsystem [MemoryElementName]. (DIMM 7)	Yes
806f010c-2008ffff	Uncorrectable error detected for [PhysicalMemoryElementName] on Subsystem [MemoryElementName]. (DIMM 8)	Yes
806f010c-2009ffff	Uncorrectable error detected for [PhysicalMemoryElementName] on Subsystem [MemoryElementName]. (DIMM 9)	Yes
806f010c-200affff	Uncorrectable error detected for [PhysicalMemoryElementName] on Subsystem [MemoryElementName]. (DIMM 10)	Yes
806f010c-200bffff	Uncorrectable error detected for [PhysicalMemoryElementName] on Subsystem [MemoryElementName]. (DIMM 11)	Yes

Table 33. Events that automatically notify Support (continued)

Event ID	Message String	Automatically Notify Support
806f010c-200cffff	Uncorrectable error detected for [PhysicalMemoryElementName] on Subsystem [MemoryElementName]. (DIMM 12)	Yes
806f010c-200dffff	Uncorrectable error detected for [PhysicalMemoryElementName] on Subsystem [MemoryElementName]. (DIMM 13)	Yes
806f010c-200effff	Uncorrectable error detected for [PhysicalMemoryElementName] on Subsystem [MemoryElementName]. (DIMM 14)	Yes
806f010c-200fffff	Uncorrectable error detected for [PhysicalMemoryElementName] on Subsystem [MemoryElementName]. (DIMM 15)	Yes
806f010c-2010ffff	Uncorrectable error detected for [PhysicalMemoryElementName] on Subsystem [MemoryElementName]. (DIMM 16)	Yes
806f010c-2011ffff	Uncorrectable error detected for [PhysicalMemoryElementName] on Subsystem [MemoryElementName]. (DIMM 17)	Yes
806f010c-2012ffff	Uncorrectable error detected for [PhysicalMemoryElementName] on Subsystem [MemoryElementName]. (DIMM 18)	Yes
806f010c-2013ffff	Uncorrectable error detected for [PhysicalMemoryElementName] on Subsystem [MemoryElementName]. (DIMM 19)	Yes
806f010c-2014ffff	Uncorrectable error detected for [PhysicalMemoryElementName] on Subsystem [MemoryElementName]. (DIMM 20)	Yes
806f010c-2015ffff	Uncorrectable error detected for [PhysicalMemoryElementName] on Subsystem [MemoryElementName]. (DIMM 21)	Yes
806f010c-2016ffff	Uncorrectable error detected for [PhysicalMemoryElementName] on Subsystem [MemoryElementName]. (DIMM 22)	Yes
806f010c-2017ffff	Uncorrectable error detected for [PhysicalMemoryElementName] on Subsystem [MemoryElementName]. (DIMM 23)	Yes
806f010c-2018ffff	Uncorrectable error detected for [PhysicalMemoryElementName] on Subsystem [MemoryElementName]. (DIMM 24)	Yes
806f010c-2581ffff	Uncorrectable error detected for [PhysicalMemoryElementName] on Subsystem [MemoryElementName]. (All DIMMS)	Yes
806f010d-0400ffff	The Drive [StorageVolumeElementName] has been disabled due to a detected fault. (Drive 0)	Yes
806f010d-0401ffff	The Drive [StorageVolumeElementName] has been disabled due to a detected fault. (Drive 1)	Yes

Table 33. Events that automatically notify Support (continued)

Event ID	Message String	Automatically Notify Support
806f010d-0402ffff	The Drive [StorageVolumeElementName] has been disabled due to a detected fault. (Drive 2)	Yes
806f010d-0403ffff	The Drive [StorageVolumeElementName] has been disabled due to a detected fault. (Drive 3)	Yes
806f010d-0404ffff	The Drive [StorageVolumeElementName] has been disabled due to a detected fault. (Drive 4)	Yes
806f010d-0405ffff	The Drive [StorageVolumeElementName] has been disabled due to a detected fault. (Drive 5)	Yes
806f010d-0406ffff	The Drive [StorageVolumeElementName] has been disabled due to a detected fault. (Drive 6)	Yes
806f010d-0407ffff	The Drive [StorageVolumeElementName] has been disabled due to a detected fault. (Drive 7)	Yes
806f010d-0408ffff	The Drive [StorageVolumeElementName] has been disabled due to a detected fault. (Drive 8)	Yes
806f010d-0409ffff	The Drive [StorageVolumeElementName] has been disabled due to a detected fault. (Drive 9)	Yes
806f010d-040affff	The Drive [StorageVolumeElementName] has been disabled due to a detected fault. (Drive 10)	Yes
806f010d-040bffff	The Drive [StorageVolumeElementName] has been disabled due to a detected fault. (Drive 11)	Yes
806f010d-040cffff	The Drive [StorageVolumeElementName] has been disabled due to a detected fault. (Drive 12)	Yes
806f010d-040dffff	The Drive [StorageVolumeElementName] has been disabled due to a detected fault. (Drive 13)	Yes
806f010d-0410ffff	The Drive [StorageVolumeElementName] has been disabled due to a detected fault. (Ext Drive)	Yes
806f011b-0701ffff	The connector [PhysicalConnectorElementName] has encountered a configuration error. (Front USB)	Yes
806f011b-0c01ffff	The connector [PhysicalConnectorElementName] has encountered a configuration error. (FP LCD Cable)	Yes
806f0207-0301ffff	[ProcessorElementName] has Failed with FRB1/BIST condition. (CPU 1)	Yes
806f0207-0302ffff	[ProcessorElementName] has Failed with FRB1/BIST condition. (CPU 2)	Yes
806f0207-2584ffff	[ProcessorElementName] has Failed with FRB1/BIST condition. (All CPUs)	Yes
806f020d-0400ffff	Failure Predicted on drive [StorageVolumeElementName] for array [ComputerSystemElementName]. (Drive 0)	Yes
806f020d-0401ffff	Failure Predicted on drive [StorageVolumeElementName] for array [ComputerSystemElementName]. (Drive 1)	Yes
806f020d-0402ffff	Failure Predicted on drive [StorageVolumeElementName] for array [ComputerSystemElementName]. (Drive 2)	Yes

Table 33. Events that automatically notify Support (continued)

Event ID	Message String	Automatically Notify Support
806f020d-0403ffff	Failure Predicted on drive [StorageVolumeElementName] for array [ComputerSystemElementName]. (Drive 3)	Yes
806f020d-0404ffff	Failure Predicted on drive [StorageVolumeElementName] for array [ComputerSystemElementName]. (Drive 4)	Yes
806f020d-0405ffff	Failure Predicted on drive [StorageVolumeElementName] for array [ComputerSystemElementName]. (Drive 5)	Yes
806f020d-0406ffff	Failure Predicted on drive [StorageVolumeElementName] for array [ComputerSystemElementName]. (Drive 6)	Yes
806f020d-0407ffff	Failure Predicted on drive [StorageVolumeElementName] for array [ComputerSystemElementName]. (Drive 7)	Yes
806f020d-0408ffff	Failure Predicted on drive [StorageVolumeElementName] for array [ComputerSystemElementName]. (Drive 8)	Yes
806f020d-0409ffff	Failure Predicted on drive [StorageVolumeElementName] for array [ComputerSystemElementName]. (Drive 9)	Yes
806f020d-040affff	Failure Predicted on drive [StorageVolumeElementName] for array [ComputerSystemElementName]. (Drive 10)	Yes
806f020d-040bffff	Failure Predicted on drive [StorageVolumeElementName] for array [ComputerSystemElementName]. (Drive 11)	Yes
806f020d-040cffff	Failure Predicted on drive [StorageVolumeElementName] for array [ComputerSystemElementName]. (Drive 12)	Yes
806f020d-040dffff	Failure Predicted on drive [StorageVolumeElementName] for array [ComputerSystemElementName]. (Drive 13)	Yes
806f020d-0410ffff	Failure Predicted on drive [StorageVolumeElementName] for array [ComputerSystemElementName]. (Ext Drive)	Yes
806f050c-2001ffff	Memory Logging Limit Reached for [PhysicalMemoryElementName] on Subsystem [MemoryElementName]. (DIMM 1)	Yes
806f050c-2002ffff	Memory Logging Limit Reached for [PhysicalMemoryElementName] on Subsystem [MemoryElementName]. (DIMM 2)	Yes
806f050c-2003ffff	Memory Logging Limit Reached for [PhysicalMemoryElementName] on Subsystem [MemoryElementName]. (DIMM 3)	Yes
806f050c-2004ffff	Memory Logging Limit Reached for [PhysicalMemoryElementName] on Subsystem [MemoryElementName]. (DIMM 4)	Yes
806f050c-2005ffff	Memory Logging Limit Reached for [PhysicalMemoryElementName] on Subsystem [MemoryElementName]. (DIMM 5)	Yes
806f050c-2006ffff	Memory Logging Limit Reached for [PhysicalMemoryElementName] on Subsystem [MemoryElementName]. (DIMM 6)	Yes

Table 33. Events that automatically notify Support (continued)

Event ID	Message String	Automatically Notify Support
806f050c-2007ffff	Memory Logging Limit Reached for [PhysicalMemoryElementName] on Subsystem [MemoryElementName]. (DIMM 7)	Yes
806f050c-2008ffff	Memory Logging Limit Reached for [PhysicalMemoryElementName] on Subsystem [MemoryElementName]. (DIMM 8)	Yes
806f050c-2009ffff	Memory Logging Limit Reached for [PhysicalMemoryElementName] on Subsystem [MemoryElementName]. (DIMM 9)	Yes
806f050c-200affff	Memory Logging Limit Reached for [PhysicalMemoryElementName] on Subsystem [MemoryElementName]. (DIMM 10)	Yes
806f050c-200bffff	Memory Logging Limit Reached for [PhysicalMemoryElementName] on Subsystem [MemoryElementName]. (DIMM 11)	Yes
806f050c-200cffff	Memory Logging Limit Reached for [PhysicalMemoryElementName] on Subsystem [MemoryElementName]. (DIMM 12)	Yes
806f050c-200dffff	Memory Logging Limit Reached for [PhysicalMemoryElementName] on Subsystem [MemoryElementName]. (DIMM 13)	Yes
806f050c-200effff	Memory Logging Limit Reached for [PhysicalMemoryElementName] on Subsystem [MemoryElementName]. (DIMM 14)	Yes
806f050c-200fffff	Memory Logging Limit Reached for [PhysicalMemoryElementName] on Subsystem [MemoryElementName]. (DIMM 15)	Yes
806f050c-2010ffff	Memory Logging Limit Reached for [PhysicalMemoryElementName] on Subsystem [MemoryElementName]. (DIMM 16)	Yes
806f050c-2011ffff	Memory Logging Limit Reached for [PhysicalMemoryElementName] on Subsystem [MemoryElementName]. (DIMM 17)	Yes
806f050c-2012ffff	Memory Logging Limit Reached for [PhysicalMemoryElementName] on Subsystem [MemoryElementName]. (DIMM 18)	Yes
806f050c-2013ffff	Memory Logging Limit Reached for [PhysicalMemoryElementName] on Subsystem [MemoryElementName]. (DIMM 19)	Yes
806f050c-2014ffff	Memory Logging Limit Reached for [PhysicalMemoryElementName] on Subsystem [MemoryElementName]. (DIMM 20)	Yes
806f050c-2015ffff	Memory Logging Limit Reached for [PhysicalMemoryElementName] on Subsystem [MemoryElementName]. (DIMM 21)	Yes

Table 33. Events that automatically notify Support (continued)

Event ID	Message String	Automatically Notify Support
806f050c-2016ffff	Memory Logging Limit Reached for [PhysicalMemoryElementName] on Subsystem [MemoryElementName]. (DIMM 22)	Yes
806f050c-2017ffff	Memory Logging Limit Reached for [PhysicalMemoryElementName] on Subsystem [MemoryElementName]. (DIMM 23)	Yes
806f050c-2018ffff	Memory Logging Limit Reached for [PhysicalMemoryElementName] on Subsystem [MemoryElementName]. (DIMM 24)	Yes
806f050c-2581ffff	Memory Logging Limit Reached for [PhysicalMemoryElementName] on Subsystem [MemoryElementName]. (All DIMMS)	Yes
806f060d-0400ffff	Array [ComputerSystemElementName] has failed. (Drive 0)	Yes
806f060d-0401ffff	Array [ComputerSystemElementName] has failed. (Drive 1)	Yes
806f060d-0402ffff	Array [ComputerSystemElementName] has failed. (Drive 2)	Yes
806f060d-0403ffff	Array [ComputerSystemElementName] has failed. (Drive 3)	Yes
806f060d-0404ffff	Array [ComputerSystemElementName] has failed. (Drive 4)	Yes
806f060d-0405ffff	Array [ComputerSystemElementName] has failed. (Drive 5)	Yes
806f060d-0406ffff	Array [ComputerSystemElementName] has failed. (Drive 6)	Yes
806f060d-0407ffff	Array [ComputerSystemElementName] has failed. (Drive 7)	Yes
806f060d-0408ffff	Array [ComputerSystemElementName] has failed. (Drive 8)	Yes
806f060d-0409ffff	Array [ComputerSystemElementName] has failed. (Drive 9)	Yes
806f060d-040affff	Array [ComputerSystemElementName] has failed. (Drive 10)	Yes
806f060d-040bffff	Array [ComputerSystemElementName] has failed. (Drive 11)	Yes
806f060d-040cffff	Array [ComputerSystemElementName] has failed. (Drive 12)	Yes
806f060d-040dffff	Array [ComputerSystemElementName] has failed. (Drive 13)	Yes
806f060d-0410ffff	Array [ComputerSystemElementName] has failed. (Ext Drive)	Yes

Table 33. Events that automatically notify Support (continued)

Event ID	Message String	Automatically Notify Support
806f0813-2581ffff	An Uncorrectable Bus Error has occurred on system [ComputerSystemElementName]. (DIMMs)	Yes
806f0813-2582ffff	An Uncorrectable Bus Error has occurred on system [ComputerSystemElementName]. (PCIs)	Yes
806f0813-2584ffff	An Uncorrectable Bus Error has occurred on system [ComputerSystemElementName]. (CPUs)	Yes

List of IMM events

This section lists all messages that can be sent from the IMM.

- **40000001-00000000 : Management Controller [arg1] Network Initialization Complete.**

  This message is for the use case where a Management Controller network has completed initialization.

  May also be shown as 4000000100000000 or 0x4000000100000000

  Severity
  Info

  Serviceable
  No

  Automatically notify support
  No

  Alert Category
  System - IMM Network event

  SNMP Trap ID
  37

  CIM Information
  Prefix: IMM **ID:** 0001

  User Response
  Information only; no action is required.

- **40000002-00000000 : Certificate Authority [arg1] has detected a [arg2] Certificate Error.**

  This message is for the use case when there is an error with an SSL Server, SSL Client, or SSL Trusted CA Certificate.

  May also be shown as 4000000200000000 or 0x4000000200000000

  Severity
  Error

  Serviceable
  No

  Automatically notify support
  No

  Alert Category
  System - SSL certification

SNMP Trap ID
22

CIM Information
Prefix: IMM **ID:** 0002

User Response
Make sure that the certificate that you are importing is correct and properly generated.

- **40000003-00000000 : Ethernet Data Rate modified from [arg1] to [arg2] by user [arg3].**

This message is for the use case where a user modifies the Ethernet Port data rate.

May also be shown as 4000000300000000 or 0x4000000300000000

Severity
Info

Serviceable
No

Automatically notify support
No

Alert Category
none

SNMP Trap ID

CIM Information
Prefix: IMM **ID:** 0003

User Response
Information only; no action is required.

- **40000004-00000000 : Ethernet Duplex setting modified from [arg1] to [arg2] by user [arg3].**

This message is for the use case where A user modifies the Ethernet Port duplex setting.

May also be shown as 4000000400000000 or 0x4000000400000000

Severity
Info

Serviceable
No

Automatically notify support
No

Alert Category
none

SNMP Trap ID

CIM Information
Prefix: IMM **ID:** 0004

User Response
Information only; no action is required.

- **40000005-00000000 : Ethernet MTU setting modified from [arg1] to [arg2] by user [arg3].**

This message is for the use case where a user modifies the Ethernet Port MTU setting.

May also be shown as 4000000500000000 or 0x4000000500000000

Severity
Info

Serviceable
No

Automatically notify support
No

Alert Category
none

SNMP Trap ID

CIM Information
Prefix: IMM **ID:** 0005

User Response
Information only; no action is required.

- **40000006-00000000 : Ethernet locally administered MAC address modified from [arg1] to [arg2] by user [arg3].**

This message is for the use case where a user modifies the Ethernet Port MAC address setting.

May also be shown as 4000000600000000 or 0x4000000600000000

Severity
Info

Serviceable
No

Automatically notify support
No

Alert Category
none

SNMP Trap ID

CIM Information
Prefix: IMM **ID:** 0006

User Response
Information only; no action is required.

- **40000007-00000000 : Ethernet interface [arg1] by user [arg2].**

This message is for the use case where a user enables or disabled the ethernet interface.

May also be shown as 4000000700000000 or 0x4000000700000000

Severity
Info

Serviceable
No

Automatically notify support
No

Alert Category
none

SNMP Trap ID

CIM Information
Prefix: IMM **ID:** 0007

User Response
Information only; no action is required.

- **40000008-00000000 : Hostname set to [arg1] by user [arg2].**

This message is for the use case where user modifies the Hostname of a Management Controller.

May also be shown as 4000000800000000 or 0x4000000800000000

Severity
Info

Serviceable
No

Automatically notify support
No

Alert Category
System - IMM Network event

SNMP Trap ID
37

CIM Information
Prefix: IMM **ID:** 0008

User Response
Information only; no action is required.

- **40000009-00000000 : IP address of network interface modified from [arg1] to [arg2] by user [arg3].**

This message is for the use case where user modifies the IP address of a Management Controller.

May also be shown as 4000000900000000 or 0x4000000900000000

Severity
Info

Serviceable
No

Automatically notify support
No

Alert Category
System - IMM Network event

SNMP Trap ID
37

CIM Information
Prefix: IMM **ID:** 0009

User Response
Information only; no action is required.

- **4000000a-00000000 : IP subnet mask of network interface modified from [arg1] to [arg2] by user [arg3].**

  This message is for the use case where a user modifies the IP subnet mask of a Management Controller.

  May also be shown as 4000000a00000000 or 0x4000000a00000000

  Severity
  Info

  Serviceable
  No

  Automatically notify support
  No

  Alert Category
  none

  SNMP Trap ID

  CIM Information
  Prefix: IMM **ID:** 0010

  User Response
  Information only; no action is required.

- **4000000b-00000000 : IP address of default gateway modified from [arg1] to [arg2] by user [arg3].**

  This message is for the use case where a user modifies the default gateway IP address of a Management Controller.

  May also be shown as 4000000b00000000 or 0x4000000b00000000

  Severity
  Info

  Serviceable
  No

  Automatically notify support
  No

  Alert Category
  none

  SNMP Trap ID

  CIM Information
  Prefix: IMM **ID:** 0011

  User Response
  Information only; no action is required.

- **4000000c-00000000 : OS Watchdog response [arg1] by [arg2].**

  This message is for the use case where an OS Watchdog has been enabled or disabled by a user.

  May also be shown as 4000000c00000000 or 0x4000000c00000000

Severity
Warning

Serviceable
No

Automatically notify support
No

Alert Category
none

SNMP Trap ID

CIM Information
Prefix: IMM **ID:** 0012

User Response
Information only; no action is required.

- **4000000d-00000000 : DHCP[[arg1]] failure, no IP address assigned.**

This message is for the use case where a DHCP server fails to assign an IP address to a Management Controller.

May also be shown as 4000000d00000000 or 0x4000000d00000000

Severity
Warning

Serviceable
No

Automatically notify support
No

Alert Category
none

SNMP Trap ID

CIM Information
Prefix: IMM **ID:** 0013

User Response
Complete the following steps until the problem is solved:

1. Make sure that the IMM network cable is connected.
2. Make sure that there is a DHCP server on the network that can assign an IP address to the IMM.

- **4000000e-00000000 : Remote Login Successful. Login ID: [arg1] from [arg2] at IP address [arg3].**

This message is for the use case where a user successfully logs in to a Management Controller.

May also be shown as 4000000e00000000 or 0x4000000e00000000

Severity
Info

Serviceable
No

Automatically notify support
No

Alert Category
System - Remote Login

SNMP Trap ID
30

CIM Information
Prefix: IMM **ID:** 0014

User Response
Information only; no action is required.

- **4000000f-00000000 : Attempting to [arg1] server [arg2] by user [arg3].**

This message is for the use case where a user is using the Management Controller to perform a power function on the system.

May also be shown as 4000000f00000000 or 0x4000000f00000000

Severity
Info

Serviceable
No

Automatically notify support
No

Alert Category
none

SNMP Trap ID

CIM Information
Prefix: IMM **ID:** 0015

User Response
Information only; no action is required.

- **40000010-00000000 : Security: Userid: [arg1] had [arg2] login failures from WEB client at IP address [arg3].**

This message is for the use case where a user has failed to log in to a Management Controller from a web browser.

May also be shown as 4000001000000000 or 0x4000001000000000

Severity
Warning

Serviceable
No

Automatically notify support
No

Alert Category
System - Remote Login

SNMP Trap ID

30

CIM Information
Prefix: IMM **ID:** 0016

User Response
Complete the following steps until the problem is solved:

1. Make sure that the correct login ID and password are being used.
2. Have the system administrator reset the login ID or password.

- **40000011-00000000 : Security: Login ID: [arg1] had [arg2] login failures from CLI at [arg3].**

This message is for the use case where a user has failed to log in to a Management Controller from the Legacy CLI.

May also be shown as 4000001100000000 or 0x4000001100000000

Severity
Warning

Serviceable
No

Automatically notify support
No

Alert Category
System - Remote Login

SNMP Trap ID
30

CIM Information
Prefix: IMM **ID:** 0017

User Response
Complete the following steps until the problem is solved:

1. Make sure that the correct login ID and password are being used.
2. Have the system administrator reset the login ID or password.

- **40000012-00000000 : Remote access attempt failed. Invalid userid or password received. Userid is [arg1] from WEB browser at IP address [arg2].**

This message is for the use case where a remote user has failed to establish a remote control session from a Web browser session.

May also be shown as 4000001200000000 or 0x4000001200000000

Severity
Info

Serviceable
No

Automatically notify support
No

Alert Category
System - Remote Login

SNMP Trap ID
30

CIM Information
Prefix: IMM **ID:** 0018

User Response
Make sure that the correct login ID and password are being used.

- **40000013-00000000 : Remote access attempt failed. Invalid userid or password received. Userid is [arg1] from TELNET client at IP address [arg2].**

  This message is for the use case where a user has failed to log in to a Management Controller from a telnet session.

  May also be shown as 4000001300000000 or 0x4000001300000000

  Severity
  Info

  Serviceable
  No

  Automatically notify support
  No

  Alert Category
  System - Remote Login

  SNMP Trap ID
  30

  CIM Information
  Prefix: IMM **ID:** 0019

  User Response
  Make sure that the correct login ID and password are being used.

- **40000014-00000000 : The [arg1] on system [arg2] cleared by user [arg3].**

  This message is for the use case where a Management Controller Event Log on a system is cleared by a user.

  May also be shown as 4000001400000000 or 0x4000001400000000

  Severity
  Info

  Serviceable
  No

  Automatically notify support
  No

  Alert Category
  none

  SNMP Trap ID

  CIM Information
  Prefix: IMM **ID:** 0020

  User Response
  Information only; no action is required.

- **40000015-00000000 : Management Controller [arg1] reset was initiated by user [arg2].**

This message is for the use case where a Management Controller reset is initiated by a user.

May also be shown as 4000001500000000 or 0x4000001500000000

Severity
Info

Serviceable
No

Automatically notify support
No

Alert Category
none

SNMP Trap ID

CIM Information
Prefix: IMM **ID:** 0021

User Response
Information only; no action is required.

- **40000016-00000000 : ENET[[arg1]] DHCP-HSTN=[arg2], DN=[arg3], IP@=[arg4], SN=[arg5], GW@=[arg6], DNS1@=[arg7].**

  This message is for the use case where a Management Controller IP address and configuration has been assigned by the DHCP server.

  May also be shown as 4000001600000000 or 0x4000001600000000

  Severity
  Info

  Serviceable
  No

  Automatically notify support
  No

  Alert Category
  none

  SNMP Trap ID

  CIM Information
  Prefix: IMM **ID:** 0022

  User Response
  Information only; no action is required.

- **40000017-00000000 : ENET[[arg1]] IP-Cfg:HstName=[arg2], IP@=[arg3] ,NetMsk=[arg4], GW@=[arg5].**

  This message is for the use case where a Management Controller IP address and configuration has been assigned statically using user data.

  May also be shown as 4000001700000000 or 0x4000001700000000

  Severity
  Info

Serviceable
No

Automatically notify support
No

Alert Category
none

SNMP Trap ID

CIM Information
Prefix: IMM **ID:** 0023

User Response
Information only; no action is required.

- **40000018-00000000 : LAN: Ethernet[[arg1]] interface is no longer active.**

This message is for the use case where a Management Controller ethernet interface is no longer active.

May also be shown as 4000001800000000 or 0x4000001800000000

Severity
Info

Serviceable
No

Automatically notify support
No

Alert Category
none

SNMP Trap ID

CIM Information
Prefix: IMM **ID:** 0024

User Response
Information only; no action is required.

- **40000019-00000000 : LAN: Ethernet[[arg1]] interface is now active.**

This message is for the use case where a Management Controller ethernet interface is now active.

May also be shown as 4000001900000000 or 0x4000001900000000

Severity
Info

Serviceable
No

Automatically notify support
No

Alert Category
none

SNMP Trap ID

CIM Information
Prefix: IMM **ID:** 0025

User Response
Information only; no action is required.

- **4000001a-00000000 : DHCP setting changed to [arg1] by user [arg2].**

  This message is for the use case where a user changes the DHCP setting.

  May also be shown as 4000001a00000000 or 0x4000001a00000000

  Severity
  Info

  Serviceable
  No

  Automatically notify support
  No

  Alert Category
  none

  SNMP Trap ID

  CIM Information
  Prefix: IMM **ID:** 0026

  User Response
  Information only; no action is required.

- **4000001b-00000000 : Management Controller [arg1]: Configuration restored from a file by user [arg2].**

  This message is for the use case where a user restores a Management Controller configuration from a file.

  May also be shown as 4000001b00000000 or 0x4000001b00000000

  Severity
  Info

  Serviceable
  No

  Automatically notify support
  No

  Alert Category
  none

  SNMP Trap ID

  CIM Information
  Prefix: IMM **ID:** 0027

  User Response
  Information only; no action is required.

- **4000001c-00000000 : Watchdog [arg1] Screen Capture Occurred.**

This message is for the use case where an operating system error has occurred and the screen was captured.

May also be shown as 4000001c00000000 or 0x4000001c00000000

Severity
Info

Serviceable
No

Automatically notify support
No

Alert Category
System - other

SNMP Trap ID
22

CIM Information
Prefix: IMM **ID:** 0028

User Response
If there was no operating-system error, complete the following steps until the problem is solved:

1. Reconfigure the watchdog timer to a higher value.
2. Make sure that the IMM Ethernet-over-USB interface is enabled.
3. Reinstall the RNDIS or cdc_ether device driver for the operating system.
4. Disable the watchdog.

If there was an operating-system error, check the integrity of the installed operating system.

- **4000001d-00000000 : Watchdog [arg1] Failed to Capture Screen.**

This message is for the use case where an operating system error has occurred and the screen capture failed.

May also be shown as 4000001d00000000 or 0x4000001d00000000

Severity
Error

Serviceable
No

Automatically notify support
No

Alert Category
System - other

SNMP Trap ID
22

CIM Information
Prefix: IMM **ID:** 0029

User Response
Complete the following steps until the problem is solved:

1. Reconfigure the watchdog timer to a higher value.
2. Make sure that the IMM Ethernet over USB interface is enabled.

3. Reinstall the RNDIS or cdc_ether device driver for the operating system.
4. Disable the watchdog. Check the integrity of the installed operating system.
5. Update the IMM firmware. Important: Some cluster solutions require specific code levels or coordinated code updates. If the device is part of a cluster solution, verify that the latest level of code is supported for the cluster solution before you update the code.

- **4000001e-00000000 : Running the backup Management Controller [arg1] main application.**

  This message is for the use case where a Management Controller has resorted to running the backup main application.

  May also be shown as 4000001e00000000 or 0x4000001e00000000

  Severity
  Warning

  Serviceable
  No

  Automatically notify support
  No

  Alert Category
  System - other

  SNMP Trap ID
  22

  CIM Information
  Prefix: IMM **ID:** 0030

  User Response
  Update the IMM firmware. Important: Some cluster solutions require specific code levels or coordinated code updates. If the device is part of a cluster solution, verify that the latest level of code is supported for the cluster solution before you update the code.

- **4000001f-00000000 : Please ensure that the Management Controller [arg1] is flashed with the correct firmware. The Management Controller is unable to match its firmware to the server.**

  This message is for the use case where a Management Controller firmware version does not match the server.

  May also be shown as 4000001f00000000 or 0x4000001f00000000

  Severity
  Error

  Serviceable
  No

  Automatically notify support
  No

  Alert Category
  System - other

  SNMP Trap ID
  22

  CIM Information
  Prefix: IMM **ID:** 0031

User Response
Update the IMM firmware to a version that the server supports. Important: Some cluster solutions require specific code levels or coordinated code updates. If the device is part of a cluster solution, verify that the latest level of code is supported for the cluster solution before you update the code.

- **40000020-00000000 : Management Controller [arg1] Reset was caused by restoring default values.**

This message is for the use case where a Management Controller has been reset due to a user restoring the configuration to default values.

May also be shown as 4000002000000000 or 0x4000002000000000

Severity
Info

Serviceable
No

Automatically notify support
No

Alert Category
none

SNMP Trap ID

CIM Information
Prefix: IMM **ID:** 0032

User Response
Information only; no action is required.

- **40000021-00000000 : Management Controller [arg1] clock has been set from NTP server [arg2].**

This message is for the use case where a Management Controller clock has been set from the Network Time Protocol server.

May also be shown as 4000002100000000 or 0x4000002100000000

Severity
Info

Serviceable
No

Automatically notify support
No

Alert Category
none

SNMP Trap ID

CIM Information
Prefix: IMM **ID:** 0033

User Response
Information only; no action is required.

- **40000022-00000000 : SSL data in the Management Controller [arg1] configuruation data is invalid. Clearing configuration data region and disabling SSL.**

This message is for the use case where a Management Controller has detected invalid SSL data in the configuration data and is clearing the configuration data region and disabling the SSL.

May also be shown as 4000002200000000 or 0x4000002200000000

Severity
Error

Serviceable
No

Automatically notify support
No

Alert Category
System - other

SNMP Trap ID
22

CIM Information
Prefix: IMM **ID:** 0034

User Response
Complete the following steps until the problem is solved:

1. Make sure that the certificate that you are importing is correct.
2. Try to import the certificate again.

- **40000023-00000000 : Flash of [arg1] from [arg2] succeeded for user [arg3].**

This message is for the use case where a user has successfully flashed the firmware component (MC Main Application, MC Boot ROM, BIOS, Diagnostics, System Power Backplane, Remote Expansion Enclosure Power Backplane, Integrated System Management Processor, or Remote Expansion Enclosure Processor) from the interface and IP address (%d.

May also be shown as 4000002300000000 or 0x4000002300000000

Severity
Info

Serviceable
No

Automatically notify support
No

Alert Category
none

SNMP Trap ID

CIM Information
Prefix: IMM **ID:** 0035

User Response
Information only; no action is required.

- **40000024-00000000 : Flash of [arg1] from [arg2] failed for user [arg3].**

This message is for the use case where a user has not flashed the firmware component from the interface and IP address due to a failure.

May also be shown as 4000002400000000 or 0x4000002400000000

Severity
Info

Serviceable
No

Automatically notify support
No

Alert Category
System - other

SNMP Trap ID
22

CIM Information
Prefix: IMM **ID:** 0036

User Response
Information only; no action is required.

- **40000025-00000000 : The [arg1] on system [arg2] is 75% full.**

  This message is for the use case where a Management Controller Event Log on a system is 75% full.

  May also be shown as 4000002500000000 or 0x4000002500000000

  Severity
  Info

  Serviceable
  No

  Automatically notify support
  No

  Alert Category
  System - Event Log 75% full

  SNMP Trap ID
  35

  CIM Information
  Prefix: IMM **ID:** 0037

  User Response
  Information only; no action is required.

- **40000026-00000000 : The [arg1] on system [arg2] is 100% full.**

  This message is for the use case where a Management Controller Event Log on a system is 100% full.

  May also be shown as 4000002600000000 or 0x4000002600000000

  Severity
  Info

  Serviceable
  No

  Automatically notify support
  No

Alert Category
System - Event Log Fullness

SNMP Trap ID
35

CIM Information
Prefix: IMM **ID:** 0038

User Response
To avoid losing older log entries, save the log as a text file and clear the log.

- **40000027-00000000 : Platform Watchdog Timer expired for [arg1].**

This message is for the use case when an implementation has detected a Platform Watchdog Timer Expired

May also be shown as 4000002700000000 or 0x4000002700000000

Severity
Error

Serviceable
No

Automatically notify support
No

Alert Category
System - OS Timeout

SNMP Trap ID
21

CIM Information
Prefix: IMM **ID:** 0039

User Response
Complete the following steps until the problem is solved:

1. Reconfigure the watchdog timer to a higher value.
2. Make sure that the IMM Ethernet-over-USB interface is enabled.
3. Reinstall the RNDIS or cdc_ether device driver for the operating system.
4. Disable the watchdog.
5. Check the integrity of the installed operating system.

- **40000028-00000000 : Management Controller Test Alert Generated by [arg1].**

This message is for the use case where a user has generated a Test Alert.

May also be shown as 4000002800000000 or 0x4000002800000000

Severity
Info

Serviceable
No

Automatically notify support
No

Alert Category

System - other

SNMP Trap ID
22

CIM Information
Prefix: IMM **ID:** 0040

User Response
Information only; no action is required.

- **40000029-00000000 : Security: Userid: [arg1] had [arg2] login failures from an SSH client at IP address [arg3].**

  This message is for the use case where a user has failed to log in to a Management Controller from SSH.

  May also be shown as 4000002900000000 or 0x4000002900000000

  Severity
  Info

  Serviceable
  No

  Automatically notify support
  No

  Alert Category
  System - Remote Login

  SNMP Trap ID
  30

  CIM Information
  Prefix: IMM **ID:** 0041

  User Response
  Complete the following steps until the problem is solved:

  1. Make sure that the correct login ID and password are being used.
  2. Have the system administrator reset the login ID or password.

- **4000002a-00000000 : [arg1] firmware mismatch internal to system [arg2]. Please attempt to flash the [arg3] firmware.**

  This message is for the use case where a specific type of firmware mismatch has been detected.

  May also be shown as 4000002a00000000 or 0x4000002a00000000

  Severity
  Error

  Serviceable
  No

  Automatically notify support
  No

  Alert Category
  System - Other

  SNMP Trap ID
  22

CIM Information
Prefix: IMM **ID:** 0042

User Response
Reflash the IMM firmware to the latest version.

- **4000002b-00000000 : Domain name set to [arg1].**

Domain name set by user

May also be shown as 4000002b00000000 or 0x4000002b00000000

Severity
Info

Serviceable
No

Automatically notify support
No

Alert Category
none

SNMP Trap ID

CIM Information
Prefix: IMM **ID:** 0043

User Response
Information only; no action is required.

- **4000002c-00000000 : Domain Source changed to [arg1] by user [arg2].**

Domain source changed by user

May also be shown as 4000002c00000000 or 0x4000002c00000000

Severity
Info

Serviceable
No

Automatically notify support
No

Alert Category
none

SNMP Trap ID

CIM Information
Prefix: IMM **ID:** 0044

User Response
Information only; no action is required.

- **4000002d-00000000 : DDNS setting changed to [arg1] by user [arg2].**

DDNS setting changed by user

May also be shown as 4000002d00000000 or 0x4000002d00000000

Severity
Info

Serviceable
No

Automatically notify support
No

Alert Category
none

SNMP Trap ID

CIM Information
Prefix: IMM **ID:** 0045

User Response
Information only; no action is required.

- **4000002e-00000000 : DDNS registration successful. The domain name is [arg1].**

DDNS registration and values

May also be shown as 4000002e00000000 or 0x4000002e00000000

Severity
Info

Serviceable
No

Automatically notify support
No

Alert Category
none

SNMP Trap ID

CIM Information
Prefix: IMM **ID:** 0046

User Response
Information only; no action is required.

- **4000002f-00000000 : IPv6 enabled by user [arg1].**

IPv6 protocol is enabled by user

May also be shown as 4000002f00000000 or 0x4000002f00000000

Severity
Info

Serviceable
No

Automatically notify support
No

Alert Category
none

SNMP Trap ID

CIM Information
Prefix: IMM **ID:** 0047

User Response
Information only; no action is required.

- **40000030-00000000 : IPv6 disabled by user [arg1].**

IPv6 protocol is disabled by user

May also be shown as 4000003000000000 or 0x4000003000000000

Severity
Info

Serviceable
No

Automatically notify support
No

Alert Category
none

SNMP Trap ID

CIM Information
Prefix: IMM **ID:** 0048

User Response
Information only; no action is required.

- **40000031-00000000 : IPv6 static IP configuration enabled by user [arg1].**

IPv6 static address assignment method is enabled by user

May also be shown as 4000003100000000 or 0x4000003100000000

Severity
Info

Serviceable
No

Automatically notify support
No

Alert Category
none

SNMP Trap ID

CIM Information
Prefix: IMM **ID:** 0049

User Response
Information only; no action is required.

- **40000032-00000000 : IPv6 DHCP enabled by user [arg1].**

IPv6 DHCP assignment method is enabled by user

May also be shown as 4000003200000000 or 0x4000003200000000

Severity
Info

Serviceable
No

Automatically notify support
No

Alert Category
none

SNMP Trap ID

CIM Information
Prefix: IMM **ID:** 0050

User Response
Information only; no action is required.

- **40000033-00000000 : IPv6 stateless auto-configuration enabled by user [arg1].**

IPv6 statless auto-assignment method is enabled by user

May also be shown as 4000003300000000 or 0x4000003300000000

Severity
Info

Serviceable
No

Automatically notify support
No

Alert Category
none

SNMP Trap ID

CIM Information
Prefix: IMM **ID:** 0051

User Response
Information only; no action is required.

- **40000034-00000000 : IPv6 static IP configuration disabled by user [arg1].**

IPv6 static assignment method is disabled by user

May also be shown as 4000003400000000 or 0x4000003400000000

Severity
Info

Serviceable
No

Automatically notify support
No

Alert Category
none

SNMP Trap ID

CIM Information
Prefix: IMM **ID:** 0052

User Response
Information only; no action is required.

- **40000035-00000000 : IPv6 DHCP disabled by user [arg1].**

IPv6 DHCP assignment method is disabled by user

May also be shown as 4000003500000000 or 0x4000003500000000

Severity
Info

Serviceable
No

Automatically notify support
No

Alert Category
none

SNMP Trap ID

CIM Information
Prefix: IMM **ID:** 0053

User Response
Information only; no action is required.

- **40000036-00000000 : IPv6 stateless auto-configuration disabled by user [arg1].**

IPv6 statless auto-assignment method is disabled by user

May also be shown as 4000003600000000 or 0x4000003600000000

Severity
Info

Serviceable
No

Automatically notify support
No

Alert Category
none

SNMP Trap ID

CIM Information
Prefix: IMM **ID:** 0054

User Response
Information only; no action is required.

- **40000037-00000000 : ENET[[arg1]] IPv6-LinkLocal:HstName=[arg2], IP@=[arg3] ,Pref=[arg4].**

IPv6 Link Local address is active

May also be shown as 4000003700000000 or 0x4000003700000000

Severity
Info

Serviceable
No

Automatically notify support
No

Alert Category
none

SNMP Trap ID

CIM Information
Prefix: IMM **ID:** 0055

User Response
Information only; no action is required.

- **40000038-00000000 : ENET[[arg1]] IPv6-Static:HstName=[arg2], IP@=[arg3] ,Pref=[arg4], GW@=[arg5].**

IPv6 Static address is active

May also be shown as 4000003800000000 or 0x4000003800000000

Severity
Info

Serviceable
No

Automatically notify support
No

Alert Category
none

SNMP Trap ID

CIM Information
Prefix: IMM **ID:** 0056

User Response
Information only; no action is required.

- **40000039-00000000 : ENET[[arg1]] DHCPv6-HSTN=[arg2], DN=[arg3], IP@=[arg4], Pref=[arg5].**

IPv6 DHCP-assigned address is active

May also be shown as 4000003900000000 or 0x4000003900000000

Severity
Info

Serviceable
No

Automatically notify support
No

Alert Category
none

SNMP Trap ID

CIM Information
Prefix: IMM **ID:** 0057

User Response
Information only; no action is required.

- **4000003a-00000000 : IPv6 static address of network interface modified from [arg1] to [arg2] by user [arg3].**

A user modifies the IPv6 static address of a Management Controller

May also be shown as 4000003a00000000 or 0x4000003a00000000

Severity
Info

Serviceable
No

Automatically notify support
No

Alert Category
none

SNMP Trap ID

CIM Information
Prefix: IMM **ID:** 0058

User Response
Information only; no action is required.

- **4000003b-00000000 : DHCPv6 failure, no IP address assigned.**

S DHCP6 server fails to assign an IP address to a Management Controller.

May also be shown as 4000003b00000000 or 0x4000003b00000000

Severity
Warning

Serviceable
No

Automatically notify support
No

Alert Category

none

SNMP Trap ID

CIM Information
Prefix: IMM **ID:** 0059

User Response
Complete the following steps until the problem is solved:

1. Make sure that the IMM network cable is connected.
2. Make sure that there is a DHCPv6 server on the network that can assign an IP address to the IMM.

- **4000003c-00000000 : Platform Watchdog Timer expired for [arg1].**

An implementation has detected an OS Loader Watchdog Timer Expired

May also be shown as 4000003c00000000 or 0x4000003c00000000

Severity
Error

Serviceable
No

Automatically notify support
No

Alert Category
System - Loader timeout

SNMP Trap ID
26

CIM Information
Prefix: IMM **ID:** 0060

User Response

1. Reconfigure the watchdog timer to a higher value.
2. Make sure that the IMM Ethernet over USB interface is enabled.
3. Reinstall the RNDIS or cdc_ether device driver for the operating system.
4. Disable the watchdog.
5. Check the integrity of the installed operating system.

- **4000003d-00000000 : Telnet port number changed from [arg1] to [arg2] by user [arg3].**

A user has modified the telnet port number

May also be shown as 4000003d00000000 or 0x4000003d00000000

Severity
Info

Serviceable
No

Automatically notify support
No

Alert Category

none

SNMP Trap ID

CIM Information
Prefix: IMM **ID:** 0061

User Response
Information only; no action is required.

- **4000003e-00000000 : SSH port number changed from [arg1] to [arg2] by user [arg3].**

A user has modified the SSH port number

May also be shown as 4000003e00000000 or 0x4000003e00000000

Severity
Info

Serviceable
No

Automatically notify support
No

Alert Category
none

SNMP Trap ID

CIM Information
Prefix: IMM **ID:** 0062

User Response
Information only; no action is required.

- **4000003f-00000000 : Web-HTTP port number changed from [arg1] to [arg2] by user [arg3].**

A user has modified the Web HTTP port number

May also be shown as 4000003f00000000 or 0x4000003f00000000

Severity
Info

Serviceable
No

Automatically notify support
No

Alert Category
none

SNMP Trap ID

CIM Information
Prefix: IMM **ID:** 0063

User Response
Information only; no action is required.

- **40000040-00000000 : Web-HTTPS port number changed from [arg1] to [arg2] by user [arg3].**

  A user has modified the Web HTTPS port number

  May also be shown as 4000004000000000 or 0x4000004000000000

  Severity
  Info

  Serviceable
  No

  Automatically notify support
  No

  Alert Category
  none

  SNMP Trap ID

  CIM Information
  Prefix: IMM **ID:** 0064

  User Response
  Information only; no action is required.

- **40000041-00000000 : CIM/XML HTTP port number changed from [arg1] to [arg2] by user [arg3].**

  A user has modified the CIM HTTP port number

  May also be shown as 4000004100000000 or 0x4000004100000000

  Severity
  Info

  Serviceable
  No

  Automatically notify support
  No

  Alert Category
  none

  SNMP Trap ID

  CIM Information
  Prefix: IMM **ID:** 0065

  User Response
  Information only; no action is required.

- **40000042-00000000 : CIM/XML HTTPS port number changed from [arg1] to [arg2] by user [arg3].**

  A user has modified the CIM HTTPS port number

  May also be shown as 4000004200000000 or 0x4000004200000000

  Severity
  Info

  Serviceable
  No

Automatically notify support
No

Alert Category
none

SNMP Trap ID

CIM Information
Prefix: IMM **ID:** 0066

User Response
Information only; no action is required.

- **40000043-00000000 : SNMP Agent port number changed from [arg1] to [arg2] by user [arg3].**

A user has modified the SNMP Agent port number

May also be shown as 4000004300000000 or 0x4000004300000000

Severity
Info

Serviceable
No

Automatically notify support
No

Alert Category
none

SNMP Trap ID

CIM Information
Prefix: IMM **ID:** 0067

User Response
Information only; no action is required.

- **40000044-00000000 : SNMP Traps port number changed from [arg1] to [arg2] by user [arg3].**

A user has modified the SNMP Traps port number

May also be shown as 4000004400000000 or 0x4000004400000000

Severity
Info

Serviceable
No

Automatically notify support
No

Alert Category
none

SNMP Trap ID

CIM Information
Prefix: IMM **ID:** 0068

User Response
Information only; no action is required.

- **40000045-00000000 : Syslog port number changed from [arg1] to [arg2] by user [arg3].**

A user has modified the Syslog receiver port number

May also be shown as 4000004500000000 or 0x4000004500000000

Severity
Info

Serviceable
No

Automatically notify support
No

Alert Category
none

SNMP Trap ID

CIM Information
Prefix: IMM **ID:** 0069

User Response
Information only; no action is required.

- **40000046-00000000 : Remote Presence port number changed from [arg1] to [arg2] by user [arg3].**

A user has modified the Remote Presence port number

May also be shown as 4000004600000000 or 0x4000004600000000

Severity
Info

Serviceable
No

Automatically notify support
No

Alert Category
none

SNMP Trap ID

CIM Information
Prefix: IMM **ID:** 0070

User Response
Information only; no action is required.

- **40000047-00000000 : LED [arg1] state changed to [arg2] by [arg3].**

A user has modified the state of an LED

May also be shown as 4000004700000000 or 0x4000004700000000

Severity

Info

Serviceable
No

Automatically notify support
No

Alert Category
none

SNMP Trap ID

CIM Information
Prefix: IMM **ID:** 0071

User Response
Information only; no action is required.

- **40000048-00000000 : Inventory data changed for device [arg1], new device data hash=[arg2], new master data hash=[arg3].**

  Something has caused the physical inventory to change

  May also be shown as 4000004800000000 or 0x4000004800000000

  Severity
  Info

  Serviceable
  No

  Automatically notify support
  No

  Alert Category
  none

  SNMP Trap ID

  CIM Information
  Prefix: IMM **ID:** 0072

  User Response
  Information only; no action is required.

- **40000049-00000000 : SNMP [arg1] enabled by user [arg2].**

  A user enabled SNMPv1 or SNMPv3 or Traps

  May also be shown as 4000004900000000 or 0x4000004900000000

  Severity
  Info

  Serviceable
  No

  Automatically notify support
  No

  Alert Category
  none

SNMP Trap ID

CIM Information
Prefix: IMM **ID:** 0073

User Response
Information only; no action is required.

- **4000004a-00000000 : SNMP [arg1] disabled by user [arg2].**

A user disabled SNMPv1 or SNMPv3 or Traps

May also be shown as 4000004a00000000 or 0x4000004a00000000

Severity
Info

Serviceable
No

Automatically notify support
No

Alert Category
none

SNMP Trap ID

CIM Information
Prefix: IMM **ID:** 0074

User Response
Information only; no action is required.

- **4000004b-00000000 : SNMPv1 [arg1] set by user [arg2]: Name=[arg3], AccessType=[arg4], Address=[arg5].**

A user changed the SNMP community string

May also be shown as 4000004b00000000 or 0x4000004b00000000

Severity
Info

Serviceable
No

Automatically notify support
No

Alert Category
none

SNMP Trap ID

CIM Information
Prefix: IMM **ID:** 0075

User Response
Information only; no action is required.

- **4000004c-00000000 : LDAP Server configuration set by user [arg1]: SelectionMethod=[arg2], DomainName=[arg3], Server1=[arg4], Server2=[arg5], Server3=[arg6], Server4=[arg7].**

  A user changed the LDAP server configuration

  May also be shown as 4000004c00000000 or 0x4000004c00000000

  Severity
  Info

  Serviceable
  No

  Automatically notify support
  No

  Alert Category
  none

  SNMP Trap ID

  CIM Information
  Prefix: IMM **ID:** 0076

  User Response
  Information only; no action is required.

- **4000004d-00000000 : LDAP set by user [arg1]: RootDN=[arg2], UIDSearchAttribute=[arg3], BindingMethod=[arg4], EnhancedRBS=[arg5], TargetName=[arg6], GroupFilter=[arg7], GroupAttribute=[arg8], LoginAttribute=[arg9].**

  A user configured an LDAP Miscellaneous setting

  May also be shown as 4000004d00000000 or 0x4000004d00000000

  Severity
  Info

  Serviceable
  No

  Automatically notify support
  No

  Alert Category
  none

  SNMP Trap ID

  CIM Information
  Prefix: IMM **ID:** 0077

  User Response
  Information only; no action is required.

- **4000004e-00000000 : Serial Redirection set by user [arg1]: Mode=[arg2], BaudRate=[arg3], StopBits=[arg4], Parity=[arg5], SessionTerminateSequence=[arg6].**

  A user configured the Serial Port mode

  May also be shown as 4000004e00000000 or 0x4000004e00000000

Severity
Info

Serviceable
No

Automatically notify support
No

Alert Category
none

SNMP Trap ID

CIM Information
Prefix: IMM **ID:** 0078

User Response
Information only; no action is required.

- **4000004f-00000000 : Date and Time set by user [arg1]: Date=[arg2], Time-[arg3], DST Auto-adjust=[arg4], Timezone=[arg5].**

  A user configured the Date and Time settings

  May also be shown as 4000004f00000000 or 0x4000004f00000000

  Severity
  Info

  Serviceable
  No

  Automatically notify support
  No

  Alert Category
  none

  SNMP Trap ID

  CIM Information
  Prefix: IMM **ID:** 0079

  User Response
  Information only; no action is required.

- **40000050-00000000 : Server General Settings set by user [arg1]: Name=[arg2], Contact=[arg3], Location=[arg4], Room=[arg5], RackID=[arg6], Rack U-position=[arg7].**

  A user configured the Location setting

  May also be shown as 4000005000000000 or 0x4000005000000000

  Severity
  Info

  Serviceable
  No

  Automatically notify support
  No

Alert Category
none

SNMP Trap ID

CIM Information
Prefix: IMM **ID:** 0080

User Response
Information only; no action is required.

- **40000051-00000000 : Server Power Off Delay set to [arg1] by user [arg2].**

A user configured the Server Power Off Delay

May also be shown as 4000005100000000 or 0x4000005100000000

Severity
Info

Serviceable
No

Automatically notify support
No

Alert Category
none

SNMP Trap ID

CIM Information
Prefix: IMM **ID:** 0081

User Response
Information only; no action is required.

- **40000052-00000000 : Server [arg1] scheduled for [arg2] at [arg3] by user [arg4].**

A user configured a Server Power action at a specific time

May also be shown as 4000005200000000 or 0x4000005200000000

Severity
Info

Serviceable
No

Automatically notify support
No

Alert Category
none

SNMP Trap ID

CIM Information
Prefix: IMM **ID:** 0082

User Response
Information only; no action is required.

- **40000053-00000000 : Server [arg1] scheduled for every [arg2] at [arg3] by user [arg4].**

  A user configured a recurring Server Power Action

  May also be shown as 4000005300000000 or 0x4000005300000000

  Severity
  Info

  Serviceable
  No

  Automatically notify support
  No

  Alert Category
  none

  SNMP Trap ID

  CIM Information
  Prefix: IMM **ID:** 0083

  User Response
  Information only; no action is required.

- **40000054-00000000 : Server [arg1] [arg2] cleared by user [arg3].**

  A user cleared a Server Power Action.

  May also be shown as 4000005400000000 or 0x4000005400000000

  Severity
  Info

  Serviceable
  No

  Automatically notify support
  No

  Alert Category
  none

  SNMP Trap ID

  CIM Information
  Prefix: IMM **ID:** 0084

  User Response
  Information only; no action is required.

- **40000055-00000000 : Synchronize time setting by user [arg1]: Mode=[arg2], NTPServerHost1=[arg3]:[arg4], NTPServerHost2=[arg5]:[arg6], NTPServerHost3=[arg7]:[arg8], NTPServerHost4=[arg9]:[arg10], NTPUpdateFrequency=[arg11].**

  A user configured the Date and Time synchronize settings

  May also be shown as 4000005500000000 or 0x4000005500000000

  Severity
  Info

Serviceable
No

Automatically notify support
No

Alert Category
none

SNMP Trap ID

CIM Information
Prefix: IMM **ID:** 0085

User Response
Information only; no action is required.

- **40000056-00000000 : SMTP Server set by user [arg1] to [arg2]:[arg3].**

A user configured the SMTP server

May also be shown as 4000005600000000 or 0x4000005600000000

Severity
Info

Serviceable
No

Automatically notify support
No

Alert Category
none

SNMP Trap ID

CIM Information
Prefix: IMM **ID:** 0086

User Response
Information only; no action is required.

- **40000057-00000000 : Telnet [arg1] by user [arg2].**

A user enables or disables Telnet services

May also be shown as 4000005700000000 or 0x4000005700000000

Severity
Info

Serviceable
No

Automatically notify support
No

Alert Category
none

SNMP Trap ID

CIM Information
Prefix: IMM **ID:** 0087

User Response
Information only; no action is required.

- **40000058-00000000 : DNS servers set by user [arg1]: UseAdditionalServers=[arg2], PreferredDNStype=[arg3], IPv4Server1=[arg4], IPv4Server2=[arg5], IPv4Server3=[arg6], IPv6Server1=[arg7], IPv6Server2=[arg8], IPv6Server3=[arg9].**

A user configures the DNS servers

May also be shown as 4000005800000000 or 0x4000005800000000

Severity
Info

Serviceable
No

Automatically notify support
No

Alert Category
none

SNMP Trap ID

CIM Information
Prefix: IMM **ID:** 0088

User Response
Information only; no action is required.

- **40000059-00000000 : LAN over USB [arg1] by user [arg2].**

A user configured USB-LAN

May also be shown as 4000005900000000 or 0x4000005900000000

Severity
Info

Serviceable
No

Automatically notify support
No

Alert Category
none

SNMP Trap ID

CIM Information
Prefix: IMM **ID:** 0089

User Response
Information only; no action is required.

- **4000005a-00000000 : LAN over USB Port Forwarding set by user [arg1]: ExternalPort=[arg2], USB-LAN port=[arg3].**

A user configured USB-LAN port forwarding

May also be shown as 4000005a00000000 or 0x4000005a00000000

Severity
Info

Serviceable
No

Automatically notify support
No

Alert Category
none

SNMP Trap ID

CIM Information
Prefix: IMM **ID:** 0090

User Response
Information only; no action is required.

- **4000005b-00000000 : Secure Web services (HTTPS) [arg1] by user [arg2].**

A user enables or disables Secure web services

May also be shown as 4000005b00000000 or 0x4000005b00000000

Severity
Info

Serviceable
No

Automatically notify support
No

Alert Category
none

SNMP Trap ID

CIM Information
Prefix: IMM **ID:** 0091

User Response
Information only; no action is required.

- **4000005c-00000000 : Secure CIM/XML(HTTPS) [arg1] by user [arg2].**

A user enables or disables Secure CIM/XML services

May also be shown as 4000005c00000000 or 0x4000005c00000000

Severity
Info

Serviceable
No

Automatically notify support
No

Alert Category
none

SNMP Trap ID

CIM Information
Prefix: IMM **ID:** 0092

User Response
Information only; no action is required.

- **4000005d-00000000 : Secure LDAP [arg1] by user [arg2].**

A user enables or disables Secure LDAP services

May also be shown as 4000005d00000000 or 0x4000005d00000000

Severity
Info

Serviceable
No

Automatically notify support
No

Alert Category
none

SNMP Trap ID

CIM Information
Prefix: IMM **ID:** 0093

User Response
Information only; no action is required.

- **4000005e-00000000 : SSH [arg1] by user [arg2].**

A user enables or disables SSH services

May also be shown as 4000005e00000000 or 0x4000005e00000000

Severity
Info

Serviceable
No

Automatically notify support
No

Alert Category
none

SNMP Trap ID

CIM Information
Prefix: IMM **ID:** 0094

User Response
Information only; no action is required.

- **4000005f-00000000 : Server timeouts set by user [arg1]: EnableOSWatchdog=[arg2], OSWatchdogTimout=[arg3], EnableLoaderWatchdog=[arg4], LoaderTimeout=[arg5].**

  A user configures Server Timeouts

  May also be shown as 4000005f00000000 or 0x4000005f00000000

  Severity
  Info

  Serviceable
  No

  Automatically notify support
  No

  Alert Category
  none

  SNMP Trap ID

  CIM Information
  Prefix: IMM **ID:** 0095

  User Response
  Information only; no action is required.

- **40000060-00000000 : License key for [arg1] added by user [arg2].**

  A user installs License Key

  May also be shown as 4000006000000000 or 0x4000006000000000

  Severity
  Info

  Serviceable
  No

  Automatically notify support
  No

  Alert Category
  none

  SNMP Trap ID

  CIM Information
  Prefix: IMM **ID:** 0096

  User Response
  Information only; no action is required.

- **40000061-00000000 : License key for [arg1] removed by user [arg2].**

  A user removes a License Key

  May also be shown as 4000006100000000 or 0x4000006100000000

Severity
Info

Serviceable
No

Automatically notify support
No

Alert Category
none

SNMP Trap ID

CIM Information
Prefix: IMM **ID:** 0097

User Response
Information only; no action is required.

- **40000062-00000000 : Global Login General Settings set by user [arg1]: AuthenticationMethod=[arg2], LockoutPeriod=[arg3], SessionTimeout=[arg4].**

  A user changes the Global Login General Settings

  May also be shown as 4000006200000000 or 0x4000006200000000

  Severity
  Info

  Serviceable
  No

  Automatically notify support
  No

  Alert Category
  none

  SNMP Trap ID

  CIM Information
  Prefix: IMM **ID:** 0098

  User Response
  Information only; no action is required.

- **40000063-00000000 : Global Login Account Security set by user [arg1]: PasswordRequired=[arg2], PasswordExpirationPeriod=[arg3], MinimumPasswordReuseCycle=[arg4], MinimumPasswordLength=[arg5], MinimumPasswordChangeInterval=[arg6], MaxmumLoginFailures=[arg7], LockoutAfterMaxFailures=[arg8], MinimumDifferentCharacters=[arg9], DefaultIDExpired=[arg10], ChangePasswordFirstAccess=[arg11].**

  A user changes the Global Login Account Security Settings to Legacy

  May also be shown as 4000006300000000 or 0x4000006300000000

  Severity
  Info

  Serviceable
  No

Automatically notify support
No

Alert Category
none

SNMP Trap ID

CIM Information
Prefix: IMM **ID:** 0099

User Response
Information only; no action is required.

- **40000064-00000000 : User [arg1] created.**

A user account was created

May also be shown as 4000006400000000 or 0x4000006400000000

Severity
Info

Serviceable
No

Automatically notify support
No

Alert Category
none

SNMP Trap ID

CIM Information
Prefix: IMM **ID:** 0100

User Response
Information only; no action is required.

- **40000065-00000000 : User [arg1] removed.**

A user account was deleted

May also be shown as 4000006500000000 or 0x4000006500000000

Severity
Info

Serviceable
No

Automatically notify support
No

Alert Category
none

SNMP Trap ID

CIM Information
Prefix: IMM **ID:** 0101

User Response
Information only; no action is required.

- **40000066-00000000 : User [arg1] password modified.**

A user account was changed

May also be shown as 4000006600000000 or 0x4000006600000000

Severity
Info

Serviceable
No

Automatically notify support
No

Alert Category
none

SNMP Trap ID

CIM Information
Prefix: IMM **ID:** 0102

User Response
Information only; no action is required.

- **40000067-00000000 : User [arg1] role set to [arg2].**

A user account role assigned

May also be shown as 4000006700000000 or 0x4000006700000000

Severity
Info

Serviceable
No

Automatically notify support
No

Alert Category
none

SNMP Trap ID

CIM Information
Prefix: IMM **ID:** 0103

User Response
Information only; no action is required.

- **40000068-00000000 : User [arg1] custom privileges set: [arg2].**

User account privileges assigned

May also be shown as 4000006800000000 or 0x4000006800000000

Severity

Info

Serviceable
No

Automatically notify support
No

Alert Category
none

SNMP Trap ID

CIM Information
Prefix: IMM **ID:** 0104

User Response
Information only; no action is required.

- **40000069-00000000 : User [arg1] for SNMPv3 set: AuthenticationProtocol=[arg2], PrivacyProtocol=[arg3], AccessType=[arg4], HostforTraps=[arg5].**

User account SNMPv3 settings changed

May also be shown as 4000006900000000 or 0x4000006900000000

Severity
Info

Serviceable
No

Automatically notify support
No

Alert Category
none

SNMP Trap ID

CIM Information
Prefix: IMM **ID:** 0105

User Response
Information only; no action is required.

- **4000006a-00000000 : SSH Client key added for user [arg1].**

User locally defined an SSH Client key

May also be shown as 4000006a00000000 or 0x4000006a00000000

Severity
Info

Serviceable
No

Automatically notify support
No

Alert Category
none

SNMP Trap ID

CIM Information
Prefix: IMM **ID:** 0106

User Response
Information only; no action is required.

- **4000006b-00000000 : SSH Client key imported for user [arg1] from [arg2].**

User imported an SSH Client key

May also be shown as 4000006b00000000 or 0x4000006b00000000

Severity
Info

Serviceable
No

Automatically notify support
No

Alert Category
none

SNMP Trap ID

CIM Information
Prefix: IMM **ID:** 0107

User Response
Information only; no action is required.

- **4000006c-00000000 : SSH Client key removed from user [arg1].**

User removed an SSH Client key

May also be shown as 4000006c00000000 or 0x4000006c00000000

Severity
Info

Serviceable
No

Automatically notify support
No

Alert Category
none

SNMP Trap ID

CIM Information
Prefix: IMM **ID:** 0108

User Response
Information only; no action is required.

- **4000006d-00000000 : Management Controller [arg1]: Configuration saved to a file by user [arg2].**

A user saves a Management Controller configuration to a file.

May also be shown as 4000006d00000000 or 0x4000006d00000000

Severity
Info

Serviceable
No

Automatically notify support
No

Alert Category
none

SNMP Trap ID

CIM Information
Prefix: IMM **ID:** 0109

User Response
Information only; no action is required.

- **4000006e-00000000 : Alert Configuration Global Event Notification set by user [arg1]: RetryLimit=[arg2], RetryInterval=[arg3], EntryInterval=[arg4].**

A user changes the Global Event Notification settings.

May also be shown as 4000006e00000000 or 0x4000006e00000000

Severity
Info

Serviceable
No

Automatically notify support
No

Alert Category
none

SNMP Trap ID

CIM Information
Prefix: IMM **ID:** 0110

User Response
Information only; no action is required.

- **4000006f-00000000 : Alert Recipient Number [arg1] updated: Name=[arg2], DeliveryMethod=[arg3], Address=[arg4], IncludeLog=[arg5], Enabled=[arg6], EnabledAlerts=[arg7], AllowedFilters=[arg8].**

A user adds or updates an Alert Recipient

May also be shown as 4000006f00000000 or 0x4000006f00000000

Severity
Info

Serviceable

No

Automatically notify support
No

Alert Category
none

SNMP Trap ID

CIM Information
Prefix: IMM **ID:** 0111

User Response
Information only; no action is required.

- **40000070-00000000 : SNMP Traps enabled by user [arg1]: EnabledAlerts=[arg2], AllowedFilters= [arg3].**

A user enabled the SNMP Traps configuration

May also be shown as 4000007000000000 or 0x4000007000000000

Severity
Info

Serviceable
No

Automatically notify support
No

Alert Category
none

SNMP Trap ID

CIM Information
Prefix: IMM **ID:** 0112

User Response
Information only; no action is required.

- **40000071-00000000 : The power cap value changed from [arg1] watts to [arg2] watts by user [arg3].**

Power Cap values changed by user

May also be shown as 4000007100000000 or 0x4000007100000000

Severity
Info

Serviceable
No

Automatically notify support
No

Alert Category
none

SNMP Trap ID

CIM Information
Prefix: IMM **ID:** 0113

User Response
Information only; no action is required.

- **40000072-00000000 : The minimum power cap value changed from [arg1] watts to [arg2] watts.**

Minimum Power Cap value changed

May also be shown as 4000007200000000 or 0x4000007200000000

Severity
Info

Serviceable
No

Automatically notify support
No

Alert Category
none

SNMP Trap ID

CIM Information
Prefix: IMM **ID:** 0114

User Response
Information only; no action is required.

- **40000073-00000000 : The maximum power cap value changed from [arg1] watts to [arg2] watts.**

Maximum Power Cap value changed

May also be shown as 4000007300000000 or 0x4000007300000000

Severity
Info

Serviceable
No

Automatically notify support
No

Alert Category
none

SNMP Trap ID

CIM Information
Prefix: IMM **ID:** 0115

User Response
Information only; no action is required.

- **40000074-00000000 : The soft minimum power cap value changed from [arg1] watts to [arg2] watts.**

Soft Minimum Power Cap value changed

May also be shown as 4000007400000000 or 0x4000007400000000

Severity
Info

Serviceable
No

Automatically notify support
No

Alert Category
none

SNMP Trap ID

CIM Information
Prefix: IMM **ID:** 0116

User Response
Information only; no action is required.

- **40000075-00000000 : The measured power value exceeded the power cap value.**

Power exceeded cap

May also be shown as 4000007500000000 or 0x4000007500000000

Severity
Warning

Serviceable
No

Automatically notify support
No

Alert Category
Warning - Power

SNMP Trap ID
164

CIM Information
Prefix: IMM **ID:** 0117

User Response
Information only; no action is required.

- **40000076-00000000 : The new minimum power cap value exceeded the power cap value.**

Minimum Power Cap exceeds Power Cap

May also be shown as 4000007600000000 or 0x4000007600000000

Severity
Warning

Serviceable
No

Automatically notify support
No

Alert Category
Warning - Power

SNMP Trap ID
164

CIM Information
Prefix: IMM **ID:** 0118

User Response
Information only; no action is required.

- **40000077-00000000 : Power capping was activated by user [arg1].**

Power capping activated by user

May also be shown as 4000007700000000 or 0x4000007700000000

Severity
Info

Serviceable
No

Automatically notify support
No

Alert Category
none

SNMP Trap ID

CIM Information
Prefix: IMM **ID:** 0119

User Response
Information only; no action is required.

- **40000078-00000000 : Power capping was deactivated by user [arg1].**

Power capping deactivated by user

May also be shown as 4000007800000000 or 0x4000007800000000

Severity
Info

Serviceable
No

Automatically notify support
No

Alert Category
none

SNMP Trap ID

CIM Information
Prefix: IMM **ID:** 0120

User Response
Information only; no action is required.

- **40000079-00000000 : Static Power Savings mode has been turned on by user [arg1].**

Static Power Savings mode turned on by user

May also be shown as 4000007900000000 or 0x4000007900000000

Severity
Info

Serviceable
No

Automatically notify support
No

Alert Category
none

SNMP Trap ID

CIM Information
Prefix: IMM **ID:** 0121

User Response
Information only; no action is required.

- **4000007a-00000000 : Static Power Savings mode has been turned off by user [arg1].**

Static Power Savings mode turned off by user

May also be shown as 4000007a00000000 or 0x4000007a00000000

Severity
Info

Serviceable
No

Automatically notify support
No

Alert Category
none

SNMP Trap ID

CIM Information
Prefix: IMM **ID:** 0122

User Response
Information only; no action is required.

- **4000007b-00000000 : Dynamic Power Savings mode has been turned on by user [arg1].**

Dynamic Power Savings mode turned on by user

May also be shown as 4000007b00000000 or 0x4000007b00000000

Severity

Info

Serviceable
No

Automatically notify support
No

Alert Category
none

SNMP Trap ID

CIM Information
Prefix: IMM **ID:** 0123

User Response
Information only; no action is required.

- **4000007c-00000000 : Dynamic Power Savings mode has been turned off by user [arg1].**

Dynamic Power Savings mode turned off by user

May also be shown as 4000007c00000000 or 0x4000007c00000000

Severity
Info

Serviceable
No

Automatically notify support
No

Alert Category
none

SNMP Trap ID

CIM Information
Prefix: IMM **ID:** 0124

User Response
Information only; no action is required.

- **4000007d-00000000 : Power cap and external throttling occurred.**

Power cap and external throttling occurred

May also be shown as 4000007d00000000 or 0x4000007d00000000

Severity
Info

Serviceable
No

Automatically notify support
No

Alert Category
none

SNMP Trap ID

CIM Information
Prefix: IMM **ID:** 0125

User Response
Information only; no action is required.

- **4000007e-00000000 : External throttling occurred.**

External throttling occurred

May also be shown as 4000007e00000000 or 0x4000007e00000000

Severity
Info

Serviceable
No

Automatically notify support
No

Alert Category
none

SNMP Trap ID

CIM Information
Prefix: IMM **ID:** 0126

User Response
Information only; no action is required.

- **4000007f-00000000 : Power cap throttling occurred.**

Power cap throttling occurred

May also be shown as 4000007f00000000 or 0x4000007f00000000

Severity
Info

Serviceable
No

Automatically notify support
No

Alert Category
none

SNMP Trap ID

CIM Information
Prefix: IMM **ID:** 0127

User Response
Information only; no action is required.

- **40000080-00000000 : Remote Control session started by user [arg1] in [arg2] mode.**

Remote Control session started

May also be shown as 4000008000000000 or 0x4000008000000000

Severity
Info

Serviceable
No

Automatically notify support
No

Alert Category
none

SNMP Trap ID

CIM Information
Prefix: IMM **ID:** 0128

User Response
Information only; no action is required.

- **40000081-00000000 : PXE boot requested by user [arg1].**

PXE boot requested

May also be shown as 4000008100000000 or 0x4000008100000000

Severity
Info

Serviceable
No

Automatically notify support
No

Alert Category
none

SNMP Trap ID

CIM Information
Prefix: IMM **ID:** 0129

User Response
Information only; no action is required.

- **40000082-00000000 : The measured power value has returned below the power cap value.**

Power exceeded cap recovered

May also be shown as 4000008200000000 or 0x4000008200000000

Severity
Info

Serviceable
No

Automatically notify support
No

Alert Category
Warning - Power

SNMP Trap ID
164

CIM Information
Prefix: IMM **ID:** 0130

User Response
Information only; no action is required.

- **40000083-00000000 : The new minimum power cap value has returned below the power cap value.**

Minimum Power Cap exceeds Power Cap recovered

May also be shown as 4000008300000000 or 0x4000008300000000

Severity
Info

Serviceable
No

Automatically notify support
No

Alert Category
Warning - Power

SNMP Trap ID
164

CIM Information
Prefix: IMM **ID:** 0131

User Response
Information only; no action is required.

- **40000084-00000000 : IMM firmware mismatch between nodes [arg1] and [arg2]. Please attempt to flash the IMM firmware to the same level on all nodes.**

A mismatch of IMM firmware has been detected between nodes

May also be shown as 4000008400000000 or 0x4000008400000000

Severity
Error

Serviceable
No

Automatically notify support
No

Alert Category
System - Other

SNMP Trap ID
22

CIM Information

Prefix: IMM **ID:** 0132

User Response
Attempt to flash the IMM firmware to the same level on all nodes.

- **40000085-00000000 : FPGA firmware mismatch between nodes [arg1] and [arg2]. Please attempt to flash the FPGA firmware to the same level on all nodes.**

A mismatch of FPGA firmware has been detected between nodes

May also be shown as 4000008500000000 or 0x4000008500000000

Severity
Error

Serviceable
No

Automatically notify support
No

Alert Category
System - Other

SNMP Trap ID
22

CIM Information
Prefix: IMM **ID:** 0133

User Response
Attempt to flash the FPGA firmware to the same level on all nodes.

- **40000086-00000000 : Test Call Home Generated by user [arg1].**

Test Call Home generated by user.

May also be shown as 4000008600000000 or 0x4000008600000000

Severity
Info

Serviceable
No

Automatically notify support
Yes

Alert Category
none

SNMP Trap ID

CIM Information
Prefix: IMM **ID:** 0134

User Response
Information only; no action is required.

- **40000087-00000000 : Manual Call Home by user [arg1]: [arg2].**

Manual Call Home by user.

May also be shown as 4000008700000000 or 0x4000008700000000

Severity
Info

Serviceable
No

Automatically notify support
Yes

Alert Category
none

SNMP Trap ID

CIM Information
Prefix: IMM **ID:** 0135

User Response
Lenovo Support will address the problem.

- **40000088-00000000 : Management Controller [arg1]: Configuration restoration from a file by user [arg2] completed.**

  This message is for the use case where a user restores a Management Controller configuration from a file and it completes.

  May also be shown as 4000008800000000 or 0x4000008800000000

  Severity
  Info

  Serviceable
  No

  Automatically notify support
  No

  Alert Category
  none

  SNMP Trap ID

  CIM Information
  Prefix: IMM **ID:** 0136

  User Response
  Information only; no action is required.

- **40000089-00000000 : Management Controller [arg1]: Configuration restoration from a file by user [arg2] failed to complete.**

  This message is for the use case where a user restores a Management Controller configuration from a file and the restoration fails to complete.

  May also be shown as 4000008900000000 or 0x4000008900000000

  Severity
  Error

  Serviceable
  No

Automatically notify support
No

Alert Category
System - Other

SNMP Trap ID
22

CIM Information
Prefix: IMM **ID:** 0137

User Response

1. Turn off the server and disconnect it from the power source. You must disconnect the server from ac power to reset the IMM.
2. After 45 seconds, reconnect the server to the power source and turn on the server.
3. Retry the operation.

- **4000008a-00000000 : Management Controller [arg1]: Configuration restoration from a file by user [arg2] failed to start.**

This message is for the use case where a user restores a Management Controller configuration from a file and the restoration fails to start.

May also be shown as 4000008a00000000 or 0x4000008a00000000

Severity
Error

Serviceable
No

Automatically notify support
No

Alert Category
System - Other

SNMP Trap ID
22

CIM Information
Prefix: IMM **ID:** 0138

User Response

1. Turn off the server and disconnect it from the power source. You must disconnect the server from ac power to reset the IMM.
2. After 45 seconds, reconnect the server to the power source and turn on the server.
3. Retry the operation.

- **4000008b-00000000 : Storage [arg1] has changed.**

This message is for the use case where an IP address for the Storage Management has changed

May also be shown as 4000008b00000000 or 0x4000008b00000000

Severity
Info

Serviceable
No

Automatically notify support
No

Alert Category
System - IMM Network event

SNMP Trap ID
37

CIM Information
Prefix: IMM **ID:** 0139

User Response
Information only; no action is required.

- **4000008c-00000000 : Security: Userid: [arg1] had [arg2] login failures from a CIM client at IP address [arg3].**

  This message is for the use case where a user has failed to log in to a Management Controller from CIM.

  May also be shown as 4000008c00000000 or 0x4000008c00000000

  Severity
  Info

  Serviceable
  No

  Automatically notify support
  No

  Alert Category
  System - Remote Login

  SNMP Trap ID
  30

  CIM Information
  Prefix: IMM **ID:** 0140

  User Response
  Information only; no action is required.

- **4000008d-00000000 : Remote access attempt failed. Invalid userid or password received. Userid is [arg1] from a CIM client at IP address [arg2].**

  This message is for the use case where a remote user has failed to establish a remote control session from CIM.

  May also be shown as 4000008d00000000 or 0x4000008d00000000

  Severity
  Info

  Serviceable
  No

  Automatically notify support
  No

  Alert Category
  System - Remote Login

  SNMP Trap ID

30

CIM Information
Prefix: IMM **ID:** 0141

User Response
Information only; no action is required.

- **4000008e-00000000 : Device [arg1] VPD is not valid.**

The VPD for a device is invalid

May also be shown as 4000008e00000000 or 0x4000008e00000000

Severity
Warning

Serviceable
No

Automatically notify support
No

Alert Category
System - Other

SNMP Trap ID
22

CIM Information
Prefix: IMM **ID:** 0142

User Response
Lenovo Support will address the problem.

- **4000008f-00000000 : The bare metal connection process has been started.**

Bare Metal Connection process has been started

May also be shown as 4000008f00000000 or 0x4000008f00000000

Severity
Info

Serviceable
No

Automatically notify support
No

Alert Category
System - Other

SNMP Trap ID
22

CIM Information
Prefix: IMM **ID:** 0143

User Response
Information only; no action is required.

- **40000090-00000000 : The bare metal update application reports a status of [arg1].**

Bare Metal Update Application Status

May also be shown as 4000009000000000 or 0x4000009000000000

Severity
Info

Serviceable
No

Automatically notify support
No

Alert Category
System - Other

SNMP Trap ID
22

CIM Information
Prefix: IMM **ID:** 0144

User Response
Information only; no action is required.

- **40000091-00000000 : User [arg1] has terminated an active console session.**

A user has terminated an active console session

May also be shown as 4000009100000000 or 0x4000009100000000

Severity
Info

Serviceable
No

Automatically notify support
No

Alert Category
none

SNMP Trap ID

CIM Information
Prefix: IMM **ID:** 0145

User Response
Information only; no action is required.

- **40000092-00000000 : TKLM servers set by user [arg1]: TKLMServer1=[arg2] Port=[arg3], TKLMServer2=[arg4] Port=[arg5], TKLMServer3=[arg6] Port=[arg7], TKLMServer4=[arg8] Port=[arg9].**

A user configured the TKLM servers

May also be shown as 4000009200000000 or 0x4000009200000000

Severity
Info

Serviceable
No

Automatically notify support
No

Alert Category
none

SNMP Trap ID

CIM Information
Prefix: IMM **ID:** 0146

User Response
Information only; no action is required.

- **40000093-00000000 : TKLM servers device group set by user [arg1]: TKLMServerDeviceGroup= [arg2].**

A user configured the TKLM device group

May also be shown as 4000009300000000 or 0x4000009300000000

Severity
Info

Serviceable
No

Automatically notify support
No

Alert Category
none

SNMP Trap ID

CIM Information
Prefix: IMM **ID:** 0147

User Response
Information only; no action is required.

- **40000094-00000000 : User [arg1] has generated a new encryption key pair and installed a self-signed certificate for the TKLM client.**

User generated a new encryption key pair and installed a self-signed certificate for the TKLM client

May also be shown as 4000009400000000 or 0x4000009400000000

Severity
Info

Serviceable
No

Automatically notify support
No

Alert Category
none

SNMP Trap ID

CIM Information
Prefix: IMM **ID:** 0148

User Response
Information only; no action is required.

- **40000095-00000000 : User [arg1] has generated a new encryption key and certificate signing request for the TKLM client.**

User generated a new encryption key and certificate signing request for the TKLM client

May also be shown as 4000009500000000 or 0x4000009500000000

Severity
Info

Serviceable
No

Automatically notify support
No

Alert Category
none

SNMP Trap ID

CIM Information
Prefix: IMM **ID:** 0149

User Response
Information only; no action is required.

- **40000096-00000000 : User [arg1] has imported a signed certificate for the TKLM client from [arg2].**

User imported a signed certificate for the TKLM client

May also be shown as 4000009600000000 or 0x4000009600000000

Severity
Info

Serviceable
No

Automatically notify support
No

Alert Category
none

SNMP Trap ID

CIM Information
Prefix: IMM **ID:** 0150

User Response
Information only; no action is required.

- **40000097-00000000 : User [arg1] has imported a server certificate for the TKLM server.**

User imported a server certificate for the TKLM Server

May also be shown as 4000009700000000 or 0x4000009700000000

Severity
Info

Serviceable
No

Automatically notify support
No

Alert Category
none

SNMP Trap ID

CIM Information
Prefix: IMM **ID:** 0151

User Response
Information only; no action is required.

- **40000098-00000000 : The UEFI Definitions have been changed.**

UEFI Definitions change has been detected

May also be shown as 4000009800000000 or 0x4000009800000000

Severity
Info

Serviceable
No

Automatically notify support
No

Alert Category
none

SNMP Trap ID

CIM Information
Prefix: IMM **ID:** 0152

User Response
Information only; no action is required.

- **40000099-00000000 : Security: Userid: [arg1] had [arg2] login failures from IPMI client at IP address [arg3].**

This message is for the use case where a user has failed to log in to a Management Controller from IPMI.

May also be shown as 4000009900000000 or 0x4000009900000000

Severity
Info

Serviceable
No

Automatically notify support

No

Alert Category
System - Remote Login

SNMP Trap ID
30

CIM Information
Prefix: IMM **ID:** 0153

User Response
Information only; no action is required.

- **4000009a-00000000 : Security: Userid: [arg1] had [arg2] login failures from SNMP client at IP address [arg3].**

  This message is for the use case where a user has failed to access a Management Controller from SNMP.

  May also be shown as 4000009a00000000 or 0x4000009a00000000

  Severity
  Info

  Serviceable
  No

  Automatically notify support
  No

  Alert Category
  System - Remote Login

  SNMP Trap ID
  30

  CIM Information
  Prefix: IMM **ID:** 0154

  User Response
  Information only; no action is required.

- **4000009b-00000000 : Security: Userid: [arg1] had [arg2] login failures from IPMI serial client.**

  This message is for the use case where a user has failed to log in to a Management Controller from IPMI serial client

  May also be shown as 4000009b00000000 or 0x4000009b00000000

  Severity
  Info

  Serviceable
  No

  Automatically notify support
  No

  Alert Category
  System - Remote Login

  SNMP Trap ID
  30

  CIM Information

Prefix: IMM **ID:** 0155

User Response
Information only; no action is required.

- **4000009c-00000000 : Remote Login Successful. Login ID: [arg1] from [arg2] serial interface.**

  This message is for the use case where a user successfully logs in to a Management Controller.

  May also be shown as 4000009c00000000 or 0x4000009c00000000

  Severity
  Info

  Serviceable
  No

  Automatically notify support
  No

  Alert Category
  System - Remote Login

  SNMP Trap ID
  30

  CIM Information
  Prefix: IMM **ID:** 0156

  User Response
  Information only; no action is required.

- **4000009d-00000000 : Login ID: [arg1] from [arg2] at IP address [arg3] has logged off.**

  This message is for the use case where a user has logged off of a Management Controller.

  May also be shown as 4000009d00000000 or 0x4000009d00000000

  Severity
  Info

  Serviceable
  No

  Automatically notify support
  No

  Alert Category
  System - Remote Login

  SNMP Trap ID
  30

  CIM Information
  Prefix: IMM **ID:** 0157

  User Response
  Information only; no action is required.

- **4000009e-00000000 : Login ID: [arg1] from [arg2] at IP address [arg3] has been logged off.**

  This message is for the use case where a user has been logged off of a Management Controller.

  May also be shown as 4000009e00000000 or 0x4000009e00000000

Severity
Info

Serviceable
No

Automatically notify support
No

Alert Category
System - Remote Login

SNMP Trap ID
30

CIM Information
Prefix: IMM **ID:** 0158

User Response
Information only; no action is required.

- **4000009f-00000000 : User [arg1] has initiated a TKLM Server Connection Test to check connectivity to server [arg2].**

User initiated a TKLM Server Connection test.

May also be shown as 4000009f00000000 or 0x4000009f00000000

Severity
Info

Serviceable
No

Automatically notify support
No

Alert Category
none

SNMP Trap ID

CIM Information
Prefix: IMM **ID:** 0159

User Response
Information only; no action is required.

- **400000a0-00000000 : User [arg1] has initiated an SMTP Server Connection Test.**

User initiated an SMTP Server Connection test.

May also be shown as 400000a000000000 or 0x400000a000000000

Severity
Info

Serviceable
No

Automatically notify support
No

Alert Category

none

SNMP Trap ID

CIM Information
Prefix: IMM **ID:** 0160

User Response
Information only; no action is required.

- **400000a1-00000000 : UEFI Reported: [arg1].**

UEFI audit event logged.

May also be shown as 400000a100000000 or 0x400000a100000000

Severity
Info

Serviceable
No

Automatically notify support
No

Alert Category
none

SNMP Trap ID

CIM Information
Prefix: IMM **ID:** 0161

User Response
Information only; no action is required.

- **400000a2-00000000 : User [arg1] has [arg2] file [arg3] from [arg4].**

User has mounted/unmounted file from URL or server

May also be shown as 400000a200000000 or 0x400000a200000000

Severity
Info

Serviceable
No

Automatically notify support
No

Alert Category
System - Other

SNMP Trap ID
22

CIM Information
Prefix: IMM **ID:** 0162

User Response
Information only; no action is required.

- **400000a3-00000000 : User [arg1] has set the SMTP Server reverse-path to [arg2].**

  User set SMTP Server reverse-path address

  May also be shown as 400000a300000000 or 0x400000a300000000

  Severity
  Info

  Serviceable
  No

  Automatically notify support
  No

  Alert Category
  System - Other

  SNMP Trap ID
  22

  CIM Information
  Prefix: IMM **ID:** 0163

  User Response
  Information only; no action is required.

- **400000a4-00000000 : User [arg1] has removed a certificate.**

  User removed certificate

  May also be shown as 400000a400000000 or 0x400000a400000000

  Severity
  Info

  Serviceable
  No

  Automatically notify support
  No

  Alert Category
  System - Other

  SNMP Trap ID
  22

  CIM Information
  Prefix: IMM **ID:** 0164

  User Response
  Information only; no action is required.

- **400000a5-00000000 : A certificate has been revoked.**

  A certificate has been revoked

  May also be shown as 400000a500000000 or 0x400000a500000000

  Severity
  Info

  Serviceable
  No

Automatically notify support
No

Alert Category
System - Other

SNMP Trap ID
22

CIM Information
Prefix: IMM **ID:** 0165

User Response
Information only; no action is required.

- **400000a6-00000000 : The server was restarted for an unknown reason.**

The server was restarted for an unknown reason

May also be shown as 400000a600000000 or 0x400000a600000000

Severity
Info

Serviceable
No

Automatically notify support
No

Alert Category
System - Other

SNMP Trap ID
22

CIM Information
Prefix: IMM **ID:** 0166

User Response
Information only; no action is required.

- **400000a7-00000000 : The server is restarted by chassis control command.**

Server is restarted by chassis control command

May also be shown as 400000a700000000 or 0x400000a700000000

Severity
Info

Serviceable
No

Automatically notify support
No

Alert Category
System - Other

SNMP Trap ID
22

CIM Information
Prefix: IMM **ID:** 0167

User Response
Information only; no action is required.

- **400000a8-00000000 : The server was reset via pushbutton.**

Server was reset via pushbutton

May also be shown as 400000a800000000 or 0x400000a800000000

Severity
Info

Serviceable
No

Automatically notify support
No

Alert Category
System - Other

SNMP Trap ID
22

CIM Information
Prefix: IMM **ID:** 0168

User Response
Information only; no action is required.

- **400000a9-00000000 : The server was powered-up via power pushbutton.**

Server was power-up via power pushbutton

May also be shown as 400000a900000000 or 0x400000a900000000

Severity
Info

Serviceable
No

Automatically notify support
No

Alert Category
System - Other

SNMP Trap ID
22

CIM Information
Prefix: IMM **ID:** 0169

User Response
Information only; no action is required.

- **400000aa-00000000 : The server was restarted when the watchdog expired..**

Server was restarted when the watchdog expired.

May also be shown as 400000aa00000000 or 0x400000aa00000000

Severity

Info

Serviceable
No

Automatically notify support
No

Alert Category
System - Other

SNMP Trap ID
22

CIM Information
Prefix: IMM **ID:** 0170

User Response
Information only; no action is required.

- **400000ab-00000000 : The server was restarted for OEM reason.**

Server was restarted for OEM reason

May also be shown as 400000ab00000000 or 0x400000ab00000000

Severity
Info

Serviceable
No

Automatically notify support
No

Alert Category
System - Other

SNMP Trap ID
22

CIM Information
Prefix: IMM **ID:** 0171

User Response
Information only; no action is required.

- **400000ac-00000000 : The server was automatically powered on because the power restore policy is set to always restore..**

Server was automatically powered on because the power restore policy is set to always restore.

May also be shown as 400000ac00000000 or 0x400000ac00000000

Severity
Info

Serviceable
No

Automatically notify support
No

Alert Category
System - Other

SNMP Trap ID
22

CIM Information
Prefix: IMM **ID:** 0172

User Response
Information only; no action is required.

- **400000ad-00000000 : The server was automatically powered on because the power restore policy is set to restore previous power state..**

Server was automatically powered on because the power restore policy is set to restore previous power state.

May also be shown as 400000ad00000000 or 0x400000ad00000000

Severity
Info

Serviceable
No

Automatically notify support
No

Alert Category
System - Other

SNMP Trap ID
22

CIM Information
Prefix: IMM **ID:** 0173

User Response
Information only; no action is required.

- **400000ae-00000000 : The server was reset via Platform Event Filter.**

Server was reset via Platform Event Filter

May also be shown as 400000ae00000000 or 0x400000ae00000000

Severity
Info

Serviceable
No

Automatically notify support
No

Alert Category
System - Other

SNMP Trap ID
22

CIM Information
Prefix: IMM **ID:** 0174

User Response
Information only; no action is required.

- **400000af-00000000 : The server was power-cycled via Platform Event Filter.**

  Server was power-cycled via Platform Event Filter

  May also be shown as 400000af00000000 or 0x400000af00000000

  Severity
  Info

  Serviceable
  No

  Automatically notify support
  No

  Alert Category
  System - Other

  SNMP Trap ID
  22

  CIM Information
  Prefix: IMM **ID:** 0175

  User Response
  Information only; no action is required.

- **400000b0-00000000 : The server was soft reset.**

  Server was soft reset

  May also be shown as 400000b000000000 or 0x400000b000000000

  Severity
  Info

  Serviceable
  No

  Automatically notify support
  No

  Alert Category
  System - Other

  SNMP Trap ID
  22

  CIM Information
  Prefix: IMM **ID:** 0176

  User Response
  Information only; no action is required.

- **400000b1-00000000 : The server was powered up via Real Time Clock (scheduled power on).**

  Server was powered up via Real Time Clock (scheduled power on)

  May also be shown as 400000b100000000 or 0x400000b100000000

  Severity
  Info

  Serviceable
  No

Automatically notify support
No

Alert Category
System - Other

SNMP Trap ID
22

CIM Information
Prefix: IMM **ID:** 0177

User Response
Information only; no action is required.

- **400000b2-00000000 : The server was powered off for an unknown reason.**

Server was powered off for an unknown reason

May also be shown as 400000b200000000 or 0x400000b200000000

Severity
Info

Serviceable
No

Automatically notify support
No

Alert Category
System - Other

SNMP Trap ID
22

CIM Information
Prefix: IMM **ID:** 0178

User Response
Information only; no action is required.

- **400000b3-00000000 : The server was powered off by chassis control command.**

Server was powered off by chassis control command

May also be shown as 400000b300000000 or 0x400000b300000000

Severity
Info

Serviceable
No

Automatically notify support
No

Alert Category
System - Other

SNMP Trap ID
22

CIM Information
Prefix: IMM **ID:** 0179

User Response
Information only; no action is required.

- **400000b4-00000000 : The server was powered off via pushbutton.**

Server was powered off via pushbutton

May also be shown as 400000b400000000 or 0x400000b400000000

Severity
Info

Serviceable
No

Automatically notify support
No

Alert Category
System - Other

SNMP Trap ID
22

CIM Information
Prefix: IMM **ID:** 0180

User Response
Information only; no action is required.

- **400000b5-00000000 : The server was powered off when the watchdog expired.**

Server was powered off when the watchdog expired.

May also be shown as 400000b500000000 or 0x400000b500000000

Severity
Info

Serviceable
No

Automatically notify support
No

Alert Category
System - Other

SNMP Trap ID
22

CIM Information
Prefix: IMM **ID:** 0181

User Response
Information only; no action is required.

- **400000b6-00000000 : The server stayed powered off because the power restore policy is set to always restore..**

Server stayed powered off because the power restore policy is set to always restore.

May also be shown as 400000b600000000 or 0x400000b600000000

Severity
Info

Serviceable
No

Automatically notify support
No

Alert Category
System - Other

SNMP Trap ID
22

CIM Information
Prefix: IMM **ID:** 0182

User Response
Information only; no action is required.

- **400000b7-00000000 : The server stayed powered off because the power restore policy is set to restore previous power state..**

Server stayed powered off because the power restore policy is set to restore previous power state.

May also be shown as 400000b700000000 or 0x400000b700000000

Severity
Info

Serviceable
No

Automatically notify support
No

Alert Category
System - Other

SNMP Trap ID
22

CIM Information
Prefix: IMM **ID:** 0183

User Response
Information only; no action is required.

- **400000b8-00000000 : The server was powered off via Platform Event Filter.**

Server was power off via Platform Event Filter

May also be shown as 400000b800000000 or 0x400000b800000000

Severity
Info

Serviceable
No

Automatically notify support
No

Alert Category

System - Other

SNMP Trap ID
22

CIM Information
Prefix: IMM **ID:** 0184

User Response
Information only; no action is required.

- **400000b9-00000000 : The server was powered off via Real Time Clock (scheduled power off).**

Server was powered up via Real Time Clock (scheduled power off)

May also be shown as 400000b900000000 or 0x400000b900000000

Severity
Info

Serviceable
No

Automatically notify support
No

Alert Category
System - Other

SNMP Trap ID
22

CIM Information
Prefix: IMM **ID:** 0185

User Response
Information only; no action is required.

- **400000ba-00000000 : Management Controller [arg1] reset was initiated due to Power-On-Reset.**

Management Controller reset was initiated due to Power-On-Reset

May also be shown as 400000ba00000000 or 0x400000ba00000000

Severity
Info

Serviceable
No

Automatically notify support
No

Alert Category
System - Other

SNMP Trap ID
22

CIM Information
Prefix: IMM **ID:** 0186

User Response
Information only; no action is required.

- **400000bb-00000000 : Management Controller [arg1] reset was initiated by PRESET.**

  Management Controller reset was initiated by PRESET

  May also be shown as 400000bb00000000 or 0x400000bb00000000

  Severity
  Info

  Serviceable
  No

  Automatically notify support
  No

  Alert Category
  System - Other

  SNMP Trap ID
  22

  CIM Information
  Prefix: IMM **ID:** 0187

  User Response
  Information only; no action is required.

- **400000bc-00000000 : Management Controller [arg1] reset was initiated by CMM.**

  Management Controller reset was initiated by CMM

  May also be shown as 400000bc00000000 or 0x400000bc00000000

  Severity
  Info

  Serviceable
  No

  Automatically notify support
  No

  Alert Category
  System - Other

  SNMP Trap ID
  22

  CIM Information
  Prefix: IMM **ID:** 0188

  User Response
  Information only; no action is required.

- **400000bd-00000000 : Management Controller [arg1] reset was initiated by IMM firmware.**

  Management Controller reset was initiated by IMM firmware

  May also be shown as 400000bd00000000 or 0x400000bd00000000

  Severity
  Info

  Serviceable
  No

Automatically notify support
No

Alert Category
System - Other

SNMP Trap ID
22

CIM Information
Prefix: IMM **ID:** 0189

User Response
Information only; no action is required.

- **400000be-00000000 : The [arg1] certificate is expired and has been removed.**

Expired certificate has been removed

May also be shown as 400000be00000000 or 0x400000be00000000

Severity
Info

Serviceable
No

Automatically notify support
No

Alert Category
System - Other

SNMP Trap ID
22

CIM Information
Prefix: IMM **ID:** 0190

User Response
Information only; no action is required.

- **400000bf-00000000 : Operating System status has changed to [arg1].**

Operating System status change

May also be shown as 400000bf00000000 or 0x400000bf00000000

Severity
Info

Serviceable
No

Automatically notify support
No

Alert Category
System - Other

SNMP Trap ID
22

CIM Information
Prefix: IMM **ID:** 0191

User Response
Information only; no action is required.

- **400000c1-00000000 : System running in setup.**

System running in setup

May also be shown as 400000c100000000 or 0x400000c100000000

Severity
Info

Serviceable
No

Automatically notify support
No

Alert Category
System - Other

SNMP Trap ID
22

CIM Information
Prefix: IMM **ID:** 0193

User Response
Information only; no action is required.

- **400000c2-00000000 : Remote Control session started by user [arg1] in [arg2] mode has been closed.**

Remote Control session closed

May also be shown as 400000c200000000 or 0x400000c200000000

Severity
Info

Serviceable
No

Automatically notify support
No

Alert Category
System - Other

SNMP Trap ID
22

CIM Information
Prefix: IMM **ID:** 0194

User Response
Information only; no action is required.

- **400000c3-00000000 : Call Home to [arg1] failed to complete: [arg2].**

Call Home failed to complete.

May also be shown as 400000c300000000 or 0x400000c300000000

Severity
Info

Serviceable
No

Automatically notify support
No

Alert Category
System - Other

SNMP Trap ID
22

CIM Information
Prefix: IMM **ID:** 0195

User Response
Information only; no action is required.

- **400000c4-00000000 : IMM failed to log previous event [arg1].**

IMM failed to log a previous event.

May also be shown as 400000c400000000 or 0x400000c400000000

Severity
Info

Serviceable
No

Automatically notify support
No

Alert Category
System - Other

SNMP Trap ID
22

CIM Information
Prefix: IMM **ID:** 0196

User Response
Information only; no action is required.

- **400000c5-00000000 : UEFI deployment boot mode is enabled for NextBoot.**

UEFI deployment boot mode is enabled for NextBoot

May also be shown as 400000c500000000 or 0x400000c500000000

Severity
Info

Serviceable
No

Automatically notify support
No

Alert Category
System - Other

SNMP Trap ID
22

CIM Information
Prefix: IMM **ID:** 0197

User Response
Information only; no action is required.

- **400000c6-00000000 : UEFI deployment boot mode is enabled for NextAc.**

UEFI deployment boot mode is enabled for NextAC

May also be shown as 400000c600000000 or 0x400000c600000000

Severity
Info

Serviceable
No

Automatically notify support
No

Alert Category
System - Other

SNMP Trap ID
22

CIM Information
Prefix: IMM **ID:** 0198

User Response
Information only; no action is required.

- **400000c7-00000000 : UEFI deployment boot mode has been disabled.**

UEFI deployment boot mode has been disabled

May also be shown as 400000c700000000 or 0x400000c700000000

Severity
Info

Serviceable
No

Automatically notify support
No

Alert Category
System - Other

SNMP Trap ID
22

CIM Information
Prefix: IMM **ID:** 0199

User Response
Information only; no action is required.

- **400000c9-00000000 : User [arg1] made system [arg2] Encapsulation lite Mode.**

Encapsulation lite mode status change

May also be shown as 400000c900000000 or 0x400000c900000000

Severity
Info

Serviceable
No

Automatically notify support
No

Alert Category
System - Other

SNMP Trap ID
22

CIM Information
Prefix: IMM **ID:** 0201

User Response
Information only; no action is required.

- **400000ca-00000000 : Battery error was detected by RAID controller. The battery unit needs replacement.([arg1],[arg2],[arg3],[arg4],[arg5])**

Battery error was detected by RAID controller

May also be shown as 400000ca00000000 or 0x400000ca00000000

Severity
Info

Serviceable
No

Automatically notify support
No

Alert Category
System - Other

SNMP Trap ID
22

CIM Information
Prefix: IMM **ID:** 0202

User Response
Check storage documentation by LSI Event ID.

- **400000cb-00000000 : The RAID controller has problem with the battery. Please contact technical support to resolve this issue.([arg1],[arg2],[arg3],[arg4],[arg5])**

The RAID controller has problem with the battery

May also be shown as 400000cb00000000 or 0x400000cb00000000

Severity
Info

Serviceable

No

Automatically notify support
Yes

Alert Category
System - Other

SNMP Trap ID
22

CIM Information
Prefix: IMM **ID:** 0203

User Response
Check storage documentation by LSI Event ID.

- **400000cc-00000000 : The RAID controller detected unrecoverable error. The controller needs replacement.([arg1],[arg2],[arg3],[arg4],[arg5])**

  The RAID controller detected unrecoverable error

  May also be shown as 400000cc00000000 or 0x400000cc00000000

  Severity
  Info

  Serviceable
  No

  Automatically notify support
  Yes

  Alert Category
  System - Other

  SNMP Trap ID
  22

  CIM Information
  Prefix: IMM **ID:** 0204

  User Response
  Check storage documentation by LSI Event ID.

- **400000cd-00000000 : The RAID controller detected one or more problems. Please contact technical support for additional assistance.([arg1],[arg2],[arg3],[arg4],[arg5])**

  The RAID controller detected one or more problems

  May also be shown as 400000cd00000000 or 0x400000cd00000000

  Severity
  Info

  Serviceable
  No

  Automatically notify support
  No

  Alert Category
  System - Other

  SNMP Trap ID

22

CIM Information
Prefix: IMM **ID:** 0205

User Response
Check storage documentation by LSI Event ID.

- **400000ce-00000000 : The RAID controller detected one or more possible configuration changes within the subsystem. Please check the drive LED status. If necessary, contact technical support for additional assistance.([arg1],[arg2],[arg3],[arg4],[arg5])**

  The RAID controller detected one or more possible configuration changes within the subsystem

  May also be shown as 400000ce00000000 or 0x400000ce00000000

  Severity
  Info

  Serviceable
  No

  Automatically notify support
  No

  Alert Category
  System - Other

  SNMP Trap ID
  22

  CIM Information
  Prefix: IMM **ID:** 0206

  User Response
  Check storage documentation by LSI Event ID.

- **400000cf-00000000 : Enclosure issue detected with one or more units. Please check the enclosure units to repair the problem.([arg1],[arg2],[arg3],[arg4],[arg5])**

  Enclosure issue detected with one or more units

  May also be shown as 400000cf00000000 or 0x400000cf00000000

  Severity
  Info

  Serviceable
  No

  Automatically notify support
  No

  Alert Category
  System - Other

  SNMP Trap ID
  22

  CIM Information
  Prefix: IMM **ID:** 0207

  User Response
  Lenovo Support will address the problem.

- **400000d0-00000000 : Connectivity issue detected with the enclosure. Please check your cable configurations to repair the problem.([arg1],[arg2],[arg3],[arg4],[arg5])**

  Connectivity issue detected with the enclosure

  May also be shown as 400000d000000000 or 0x400000d000000000

  Severity
  Info

  Serviceable
  No

  Automatically notify support
  No

  Alert Category
  System - Other

  SNMP Trap ID
  22

  CIM Information
  Prefix: IMM **ID:** 0208

  User Response
  Lenovo Support will address the problem.

- **400000d1-00000000 : Fan problem detected with the enclosure. Please check the enclosure unit fan for correct operation.([arg1],[arg2],[arg3],[arg4],[arg5])**

  Fan problem detected with the enclosure

  May also be shown as 400000d100000000 or 0x400000d100000000

  Severity
  Info

  Serviceable
  No

  Automatically notify support
  No

  Alert Category
  System - Other

  SNMP Trap ID
  22

  CIM Information
  Prefix: IMM **ID:** 0209

  User Response
  Lenovo Support will address the problem.

- **400000d2-00000000 : Enclosure power supply has problem. Please check the enclosure unit power supply for correct operation.([arg1],[arg2],[arg3],[arg4],[arg5])**

  Enclosure power supply has problem

  May also be shown as 400000d200000000 or 0x400000d200000000

  Severity

Info

Serviceable
No

Automatically notify support
No

Alert Category
System - Other

SNMP Trap ID
22

CIM Information
Prefix: IMM **ID:** 0210

User Response
Lenovo Support will address the problem.

- **400000d3-00000000 : One or more virtual drives are in abnormal status that may cause unavailable virtual drive. Please check the event logs and if events are targeted to the same disk then replace the drive. If necessary, contact technical support for additional assistance.([arg1],[arg2],[arg3],[arg4],[arg5])**

  One or more virtual drives are in abnormal status that may cause unavailable virtual drive

  May also be shown as 400000d300000000 or 0x400000d300000000

  Severity
  Info

  Serviceable
  No

  Automatically notify support
  No

  Alert Category
  System - Other

  SNMP Trap ID
  22

  CIM Information
  Prefix: IMM **ID:** 0211

  User Response
  Check storage documentation by LSI Event ID.

- **400000d4-00000000 : The RAID controller detected one or more possible configuration problems within the subsystem. Please check the event logs and if events are targeted to the same disk then replace the drive. If necessary, contact technical support for additional assistance.([arg1],[arg2],[arg3],[arg4],[arg5])**

  The RAID controller detected one or more possible configuration problems within the subsystem

  May also be shown as 400000d400000000 or 0x400000d400000000

  Severity
  Info

  Serviceable
  No

Automatically notify support
No

Alert Category
System - Other

SNMP Trap ID
22

CIM Information
Prefix: IMM **ID:** 0212

User Response
Check storage documentation by LSI Event ID.

- **400000d5-00000000 : One or more virtual drives have problem. Please contact technical support to resolve this issue.([arg1],[arg2],[arg3],[arg4],[arg5])**

  One or more virtual drives have problem

  May also be shown as 400000d500000000 or 0x400000d500000000

  Severity
  Info

  Serviceable
  No

  Automatically notify support
  Yes

  Alert Category
  System - Other

  SNMP Trap ID
  22

  CIM Information
  Prefix: IMM **ID:** 0213

  User Response
  Check storage documentation by LSI Event ID.

- **400000d6-00000000 : Drive error was detected by RAID controller. Please contact technical support to resolve this issue.([arg1],[arg2],[arg3],[arg4],[arg5])**

  Drive error was detected by RAID controller

  May also be shown as 400000d600000000 or 0x400000d600000000

  Severity
  Info

  Serviceable
  No

  Automatically notify support
  Yes

  Alert Category
  System - Other

  SNMP Trap ID
  22

CIM Information
Prefix: IMM **ID:** 0214

User Response
Check storage documentation by LSI Event ID.

- **400000d7-00000000 : Drive error was detected by RAID controller. Please check the event logs and if events are targeted to the same disk then replace the drive. If necessary, contact technical support for additional assistance.([arg1],[arg2],[arg3],[arg4],[arg5])**

  Drive error was detected by RAID controller

  May also be shown as 400000d700000000 or 0x400000d700000000

  Severity
  Info

  Serviceable
  No

  Automatically notify support
  No

  Alert Category
  System - Other

  SNMP Trap ID
  22

  CIM Information
  Prefix: IMM **ID:** 0215

  User Response
  Check storage documentation by LSI Event ID.

- **80010002-0701ffff : Numeric sensor [NumericSensorElementName] going low (lower non-critical) has asserted. (CMOS Battery)**

  This message is for the use case when an implementation has detected a Lower Non-critical sensor going low has asserted.

  May also be shown as 800100020701ffff or 0x800100020701ffff

  Severity
  Warning

  Serviceable
  Yes

  Automatically notify support
  No

  Alert Category
  Warning - Voltage

  SNMP Trap ID
  13

  CIM Information
  Prefix: PLAT **ID:** 0476

  User Response
  Replace the system battery.

- **80010202-0701ffff : Numeric sensor [NumericSensorElementName] going low (lower critical) has asserted. (CMOS Battery)**

  This message is for the use case when an implementation has detected a Lower Critical sensor going low has asserted.

  May also be shown as 800102020701ffff or 0x800102020701ffff

  Severity
  Error

  Serviceable
  Yes

  Automatically notify support
  Yes

  Alert Category
  Critical - Voltage

  SNMP Trap ID
  1

  CIM Information
  Prefix: PLAT **ID:** 0480

  User Response
  If the specified sensor is CMOS battery, replace the system battery. If the specified sensor is Planar 3.3V or Planar 5V, (trained technician only) replace the system board. If the specified sensor is Planar 12V, complete the following steps until the problem is solved:

  1. Check power supply n LED.
  2. Remove the failing power supply.
  3. Follow actions in "Power Problems and Solving Power Problems".
  4. (Trained technician only) Replace the system board. (n = power supply number)

  SysBrd 12V : SysBrd 3.3V : SysBrd 5V :

- **80010204-1d01ffff : Numeric sensor [NumericSensorElementName] going low (lower critical) has asserted. (Fan 1A Tach)**

  This message is for the use case when an implementation has detected a Lower Critical sensor going low has asserted.

  May also be shown as 800102041d01ffff or 0x800102041d01ffff

  Severity
  Error

  Serviceable
  Yes

  Automatically notify support
  No

  Alert Category
  Critical - Fan Failure

  SNMP Trap ID
  11

  CIM Information
  Prefix: PLAT **ID:** 0480

User Response

1. Reseat the failing fan n, which is indicated by a lit LED near the fan connector on the system board.
2. Replace the failing fan. (n = fan number)

Fan 1B Tach :

- **80010204-1d02ffff : Numeric sensor [NumericSensorElementName] going low (lower critical) has asserted. (Fan 2A Tach)**

  This message is for the use case when an implementation has detected a Lower Critical sensor going low has asserted.

  May also be shown as 800102041d02ffff or 0x800102041d02ffff

  Severity
  Error

  Serviceable
  Yes

  Automatically notify support
  No

  Alert Category
  Critical - Fan Failure

  SNMP Trap ID
  11

  CIM Information
  Prefix: PLAT **ID:** 0480

  User Response

  1. Reseat the failing fan n, which is indicated by a lit LED near the fan connector on the system board.
  2. Replace the failing fan. (n = fan number)

  Fan 2B Tach :

- **80010204-1d03ffff : Numeric sensor [NumericSensorElementName] going low (lower critical) has asserted. (Fan 3A Tach)**

  This message is for the use case when an implementation has detected a Lower Critical sensor going low has asserted.

  May also be shown as 800102041d03ffff or 0x800102041d03ffff

  Severity
  Error

  Serviceable
  Yes

  Automatically notify support
  No

  Alert Category
  Critical - Fan Failure

  SNMP Trap ID
  11

CIM Information
Prefix: PLAT **ID:** 0480

User Response

1. Reseat the failing fan n, which is indicated by a lit LED near the fan connector on the system board.
2. Replace the failing fan. (n = fan number)

Fan 3B Tach :

- **80010204-1d04ffff : Numeric sensor [NumericSensorElementName] going low (lower critical) has asserted. (Fan 4A Tach)**

This message is for the use case when an implementation has detected a Lower Critical sensor going low has asserted.

May also be shown as 800102041d04ffff or 0x800102041d04ffff

Severity
Error

Serviceable
Yes

Automatically notify support
No

Alert Category
Critical - Fan Failure

SNMP Trap ID
11

CIM Information
Prefix: PLAT **ID:** 0480

User Response

1. Reseat the failing fan n, which is indicated by a lit LED near the fan connector on the system board.
2. Replace the failing fan. (n = fan number)

Fan 4B Tach :

- **80010204-1d05ffff : Numeric sensor [NumericSensorElementName] going low (lower critical) has asserted. (Fan 5A Tach)**

This message is for the use case when an implementation has detected a Lower Critical sensor going low has asserted.

May also be shown as 800102041d05ffff or 0x800102041d05ffff

Severity
Error

Serviceable
Yes

Automatically notify support
No

Alert Category
Critical - Fan Failure

SNMP Trap ID
11

CIM Information
Prefix: PLAT **ID:** 0480

User Response

1. Reseat the failing fan n, which is indicated by a lit LED near the fan connector on the system board.
2. Replace the failing fan. (n = fan number)

Fan 5B Tach :

- **80010204-1d06ffff : Numeric sensor [NumericSensorElementName] going low (lower critical) has asserted. (Fan 6A Tach)**

This message is for the use case when an implementation has detected a Lower Critical sensor going low has asserted.

May also be shown as 800102041d06ffff or 0x800102041d06ffff

Severity
Error

Serviceable
Yes

Automatically notify support
No

Alert Category
Critical - Fan Failure

SNMP Trap ID
11

CIM Information
Prefix: PLAT **ID:** 0480

User Response

1. Reseat the failing fan n, which is indicated by a lit LED near the fan connector on the system board.
2. Replace the failing fan. (n = fan number)

Fan 6B Tach :

- **80010204-1d07ffff : Numeric sensor [NumericSensorElementName] going low (lower critical) has asserted. (Fan 7A Tach)**

This message is for the use case when an implementation has detected a Lower Critical sensor going low has asserted.

May also be shown as 800102041d07ffff or 0x800102041d07ffff

Severity
Error

Serviceable
Yes

Automatically notify support
No

Alert Category
Critical - Fan Failure

SNMP Trap ID
11

CIM Information
Prefix: PLAT **ID:** 0480

User Response

1. Reseat the failing fan n, which is indicated by a lit LED near the fan connector on the system board.
2. Replace the failing fan. (n = fan number)

Fan 7B Tach :

- **80010204-1d08ffff : Numeric sensor [NumericSensorElementName] going low (lower critical) has asserted. (Fan 8A Tach)**

This message is for the use case when an implementation has detected a Lower Critical sensor going low has asserted.

May also be shown as 800102041d08ffff or 0x800102041d08ffff

Severity
Error

Serviceable
Yes

Automatically notify support
No

Alert Category
Critical - Fan Failure

SNMP Trap ID
11

CIM Information
Prefix: PLAT **ID:** 0480

User Response

1. Reseat the failing fan n, which is indicated by a lit LED near the fan connector on the system board.
2. Replace the failing fan. (n = fan number)

Fan 8B Tach :

- **80010701-0f01ffff : Numeric sensor [NumericSensorElementName] going high (upper non-critical) has asserted. (REAR BP Temp A)**

This message is for the use case when an implementation has detected an Upper Non-critical sensor going high has asserted.

May also be shown as 800107010f01ffff or 0x800107010f01ffff

Severity
Warning

Serviceable
Yes

Automatically notify support
No

Alert Category
Warning - Temperature

SNMP Trap ID
12

CIM Information
Prefix: PLAT **ID:** 0490

User Response

1. Reduce the ambient temperature.
2. Ensure the air baffle is installed correctly.
3. Check the server airflow. Make sure that nothing is blocking the air from coming into or preventing the air from exiting the server.

- **80010701-0f02ffff : Numeric sensor [NumericSensorElementName] going high (upper non-critical) has asserted. (REAR BP Temp B)**

This message is for the use case when an implementation has detected an Upper Non-critical sensor going high has asserted.

May also be shown as 800107010f02ffff or 0x800107010f02ffff

Severity
Warning

Serviceable
Yes

Automatically notify support
No

Alert Category
Warning - Temperature

SNMP Trap ID
12

CIM Information
Prefix: PLAT **ID:** 0490

User Response

1. Reduce the ambient temperature.
2. Ensure the air baffle is installed correctly.
3. Check the server airflow. Make sure that nothing is blocking the air from coming into or preventing the air from exiting the server.

- **80010701-1001ffff : Numeric sensor [NumericSensorElementName] going high (upper non-critical) has asserted. (PCI 1 Amb Temp)**

This message is for the use case when an implementation has detected an Upper Non-critical sensor going high has asserted.

May also be shown as 800107011001ffff or 0x800107011001ffff

Severity
Warning

Serviceable
Yes

Automatically notify support
No

Alert Category
Warning - Temperature

SNMP Trap ID
12

CIM Information
Prefix: PLAT **ID:** 0490

User Response

1. Make sure that the fans are operating, that there are no obstructions to the airflow (front and rear of the server), that the air baffle is in place and correctly installed, and that the server cover is installed and completely closed.
2. Check the ambient temperature. You must be operating within the specifications (see Server Features and specifications for more information).
3. Make sure that the heat sink for microprocessor n.
4. (Trained technician only) Replace system board.

RAID Amb Temp : RR PCI1 Amb Temp :

- **80010701-1002ffff : Numeric sensor [NumericSensorElementName] going high (upper non-critical) has asserted. (PCI 2 Amb Temp)**

This message is for the use case when an implementation has detected an Upper Non-critical sensor going high has asserted.

May also be shown as 800107011002ffff or 0x800107011002ffff

Severity
Warning

Serviceable
Yes

Automatically notify support
No

Alert Category
Warning - Temperature

SNMP Trap ID
12

CIM Information
Prefix: PLAT **ID:** 0490

User Response

1. Make sure that the fans are operating, that there are no obstructions to the airflow (front and rear of the server), that the air baffle is in place and correctly installed, and that the server cover is installed and completely closed.
2. Check the ambient temperature. You must be operating within the specifications (see Server Features and specifications for more information).
3. Make sure that the heat sink for microprocessor n.

4. (Trained technician only) Replace system board.

RR PCI2 Amb Temp :

- **80010701-1003ffff : Numeric sensor [NumericSensorElementName] going high (upper non-critical) has asserted. (PCI 3 Amb Temp)**

  This message is for the use case when an implementation has detected an Upper Non-critical sensor going high has asserted.

  May also be shown as 800107011003ffff or 0x800107011003ffff

  Severity
  Warning

  Serviceable
  Yes

  Automatically notify support
  No

  Alert Category
  Warning - Temperature

  SNMP Trap ID
  12

  CIM Information
  Prefix: PLAT **ID:** 0490

  User Response

  1. Make sure that the fans are operating, that there are no obstructions to the airflow (front and rear of the server), that the air baffle is in place and correctly installed, and that the server cover is installed and completely closed.
  2. Check the ambient temperature. You must be operating within the specifications (see Server Features and specifications for more information).
  3. Make sure that the heat sink for microprocessor n.
  4. (Trained technician only) Replace system board.

  RR PCI3 Amb Temp :

- **80010701-1301ffff : Numeric sensor [NumericSensorElementName] going high (upper non-critical) has asserted. (PSU 1 Amb Temp)**

  This message is for the use case when an implementation has detected an Upper Non-critical sensor going high has asserted.

  May also be shown as 800107011301ffff or 0x800107011301ffff

  Severity
  Warning

  Serviceable
  Yes

  Automatically notify support
  No

  Alert Category
  Warning - Temperature

  SNMP Trap ID

12

CIM Information
Prefix: PLAT **ID:** 0490

User Response

1. Reduce the ambient temperature.
2. Ensure the air baffle is installed correctly.
3. Check the server airflow. Make sure that nothing is blocking the air from coming into or preventing the air from exiting the server.

- **80010701-1302ffff : Numeric sensor [NumericSensorElementName] going high (upper non-critical) has asserted. (PSU 2 Amb Temp)**

This message is for the use case when an implementation has detected an Upper Non-critical sensor going high has asserted.

May also be shown as 800107011302ffff or 0x800107011302ffff

Severity
Warning

Serviceable
Yes

Automatically notify support
No

Alert Category
Warning - Temperature

SNMP Trap ID
12

CIM Information
Prefix: PLAT **ID:** 0490

User Response

1. Reduce the ambient temperature.
2. Ensure the air baffle is installed correctly.
3. Check the server airflow. Make sure that nothing is blocking the air from coming into or preventing the air from exiting the server.

- **80010701-1401ffff : Numeric sensor [NumericSensorElementName] going high (upper non-critical) has asserted. (CPU1 VR Temp)**

This message is for the use case when an implementation has detected an Upper Non-critical sensor going high has asserted.

May also be shown as 800107011401ffff or 0x800107011401ffff

Severity
Warning

Serviceable
Yes

Automatically notify support
No

Alert Category
Warning - Temperature

SNMP Trap ID
12

CIM Information
Prefix: PLAT **ID:** 0490

User Response

1. Reduce the ambient temperature.
2. Ensure the air baffle is installed correctly.
3. Check the server airflow. Make sure that nothing is blocking the air from coming into or preventing the air from exiting the server.

- **80010701-1402ffff : Numeric sensor [NumericSensorElementName] going high (upper non-critical) has asserted. (CPU2 VR Temp)**

This message is for the use case when an implementation has detected an Upper Non-critical sensor going high has asserted.

May also be shown as 800107011402ffff or 0x800107011402ffff

Severity
Warning

Serviceable
Yes

Automatically notify support
No

Alert Category
Warning - Temperature

SNMP Trap ID
12

CIM Information
Prefix: PLAT **ID:** 0490

User Response

1. Reduce the ambient temperature.
2. Ensure the air baffle is installed correctly.
3. Check the server airflow. Make sure that nothing is blocking the air from coming into or preventing the air from exiting the server.

- **80010701-1403ffff : Numeric sensor [NumericSensorElementName] going high (upper non-critical) has asserted. (DIMM AB VR Temp)**

This message is for the use case when an implementation has detected an Upper Non-critical sensor going high has asserted.

May also be shown as 800107011403ffff or 0x800107011403ffff

Severity
Warning

Serviceable
Yes

Automatically notify support
No

Alert Category
Warning - Temperature

SNMP Trap ID
12

CIM Information
Prefix: PLAT **ID:** 0490

User Response

1. Reduce the ambient temperature.
2. Ensure the air baffle is installed correctly.
3. Check the server airflow. Make sure that nothing is blocking the air from coming into or preventing the air from exiting the server.

- **80010701-1404ffff : Numeric sensor [NumericSensorElementName] going high (upper non-critical) has asserted. (DIMM CD VR Temp)**

This message is for the use case when an implementation has detected an Upper Non-critical sensor going high has asserted.

May also be shown as 800107011404ffff or 0x800107011404ffff

Severity
Warning

Serviceable
Yes

Automatically notify support
No

Alert Category
Warning - Temperature

SNMP Trap ID
12

CIM Information
Prefix: PLAT **ID:** 0490

User Response

1. Reduce the ambient temperature.
2. Ensure the air baffle is installed correctly.
3. Check the server airflow. Make sure that nothing is blocking the air from coming into or preventing the air from exiting the server.

- **80010701-1405ffff : Numeric sensor [NumericSensorElementName] going high (upper non-critical) has asserted. (DIMM EF VR Temp)**

This message is for the use case when an implementation has detected an Upper Non-critical sensor going high has asserted.

May also be shown as 800107011405ffff or 0x800107011405ffff

Severity
Warning

Serviceable
Yes

Automatically notify support
No

Alert Category
Warning - Temperature

SNMP Trap ID
12

CIM Information
Prefix: PLAT **ID:** 0490

User Response

1. Reduce the ambient temperature.
2. Ensure the air baffle is installed correctly.
3. Check the server airflow. Make sure that nothing is blocking the air from coming into or preventing the air from exiting the server.

- **80010701-1406ffff : Numeric sensor [NumericSensorElementName] going high (upper non-critical) has asserted. (DIMM GH VR Temp)**

This message is for the use case when an implementation has detected an Upper Non-critical sensor going high has asserted.

May also be shown as 800107011406ffff or 0x800107011406ffff

Severity
Warning

Serviceable
Yes

Automatically notify support
No

Alert Category
Warning - Temperature

SNMP Trap ID
12

CIM Information
Prefix: PLAT **ID:** 0490

User Response

1. Reduce the ambient temperature.
2. Ensure the air baffle is installed correctly.
3. Check the server airflow. Make sure that nothing is blocking the air from coming into or preventing the air from exiting the server.

- **80010701-2d01ffff : Numeric sensor [NumericSensorElementName] going high (upper non-critical) has asserted. (PCH Temp)**

This message is for the use case when an implementation has detected an Upper Non-critical sensor going high has asserted.

May also be shown as 800107012d01ffff or 0x800107012d01ffff

Severity
Warning

Serviceable
Yes

Automatically notify support
No

Alert Category
Warning - Temperature

SNMP Trap ID
12

CIM Information
Prefix: PLAT **ID:** 0490

User Response

1. Reduce the ambient temperature.
2. Ensure the air baffle is installed correctly.
3. Check the server airflow. Make sure that nothing is blocking the air from coming into or preventing the air from exiting the server.

- **80010701-3701ffff : Numeric sensor [NumericSensorElementName] going high (upper non-critical) has asserted. (Ambient Temp)**

This message is for the use case when an implementation has detected an Upper Non-critical sensor going high has asserted.

May also be shown as 800107013701ffff or 0x800107013701ffff

Severity
Warning

Serviceable
Yes

Automatically notify support
No

Alert Category
Warning - Temperature

SNMP Trap ID
12

CIM Information
Prefix: PLAT **ID:** 0490

User Response

1. Reduce the ambient temperature.
2. Ensure the air baffle is installed correctly.
3. Check the server airflow. Make sure that nothing is blocking the air from coming into or preventing the air from exiting the server.

- **80010901-0f01ffff : Numeric sensor [NumericSensorElementName] going high (upper critical) has asserted. (REAR BP Temp A)**

This message is for the use case when an implementation has detected an Upper Critical sensor going high has asserted.

May also be shown as 800109010f01ffff or 0x800109010f01ffff

Severity
Error

Serviceable
Yes

Automatically notify support
No

Alert Category
Critical - Temperature

SNMP Trap ID
0

CIM Information
Prefix: PLAT **ID:** 0494

User Response

1. Reduce the ambient temperature.
2. Ensure the air baffle is installed correctly.
3. Check the server airflow. Make sure that nothing is blocking the air from coming into or preventing the air from exiting the server.

- **80010901-0f02ffff : Numeric sensor [NumericSensorElementName] going high (upper critical) has asserted. (REAR BP Temp B)**

This message is for the use case when an implementation has detected an Upper Critical sensor going high has asserted.

May also be shown as 800109010f02ffff or 0x800109010f02ffff

Severity
Error

Serviceable
Yes

Automatically notify support
No

Alert Category
Critical - Temperature

SNMP Trap ID
0

CIM Information
Prefix: PLAT **ID:** 0494

User Response

1. Reduce the ambient temperature.
2. Ensure the air baffle is installed correctly.
3. Check the server airflow. Make sure that nothing is blocking the air from coming into or preventing the air from exiting the server.

- **80010901-1001ffff : Numeric sensor [NumericSensorElementName] going high (upper critical) has asserted. (PCI 1 Amb Temp)**

  This message is for the use case when an implementation has detected an Upper Critical sensor going high has asserted.

  May also be shown as 800109011001ffff or 0x800109011001ffff

  Severity
  Error

  Serviceable
  Yes

  Automatically notify support
  No

  Alert Category
  Critical - Temperature

  SNMP Trap ID
  0

  CIM Information
  Prefix: PLAT **ID:** 0494

  User Response

  1. Reduce the ambient temperature.
  2. Ensure the air baffle is installed correctly.
  3. Check the server airflow. Make sure that nothing is blocking the air from coming into or preventing the air from exiting the server.

  RAID Amb Temp : RR PCI1 Amb Temp :

- **80010901-1002ffff : Numeric sensor [NumericSensorElementName] going high (upper critical) has asserted. (PCI 2 Amb Temp)**

  This message is for the use case when an implementation has detected an Upper Critical sensor going high has asserted.

  May also be shown as 800109011002ffff or 0x800109011002ffff

  Severity
  Error

  Serviceable
  Yes

  Automatically notify support
  No

  Alert Category
  Critical - Temperature

  SNMP Trap ID
  0

  CIM Information
  Prefix: PLAT **ID:** 0494

  User Response

  1. Reduce the ambient temperature.

2. Ensure the air baffle is installed correctly.
3. Check the server airflow. Make sure that nothing is blocking the air from coming into or preventing the air from exiting the server.

RR PCI2 Amb Temp :

- **80010901-1003ffff : Numeric sensor [NumericSensorElementName] going high (upper critical) has asserted. (PCI 3 Amb Temp)**

  This message is for the use case when an implementation has detected an Upper Critical sensor going high has asserted.

  May also be shown as 800109011003ffff or 0x800109011003ffff

  Severity
  Error

  Serviceable
  Yes

  Automatically notify support
  No

  Alert Category
  Critical - Temperature

  SNMP Trap ID
  0

  CIM Information
  Prefix: PLAT **ID:** 0494

  User Response

  1. Reduce the ambient temperature.
  2. Ensure the air baffle is installed correctly.
  3. Check the server airflow. Make sure that nothing is blocking the air from coming into or preventing the air from exiting the server.

  RR PCI3 Amb Temp :

- **80010901-1301ffff : Numeric sensor [NumericSensorElementName] going high (upper critical) has asserted. (PSU 1 Amb Temp)**

  This message is for the use case when an implementation has detected an Upper Critical sensor going high has asserted.

  May also be shown as 800109011301ffff or 0x800109011301ffff

  Severity
  Error

  Serviceable
  Yes

  Automatically notify support
  No

  Alert Category
  Critical - Temperature

  SNMP Trap ID
  0

CIM Information
Prefix: PLAT **ID:** 0494

User Response

1. Reduce the ambient temperature.
2. Ensure the air baffle is installed correctly.
3. Check the server airflow. Make sure that nothing is blocking the air from coming into or preventing the air from exiting the server.

- **80010901-1302ffff : Numeric sensor [NumericSensorElementName] going high (upper critical) has asserted. (PSU 2 Amb Temp)**

This message is for the use case when an implementation has detected an Upper Critical sensor going high has asserted.

May also be shown as 800109011302ffff or 0x800109011302ffff

Severity
Error

Serviceable
Yes

Automatically notify support
No

Alert Category
Critical - Temperature

SNMP Trap ID
0

CIM Information
Prefix: PLAT **ID:** 0494

User Response

1. Reduce the ambient temperature.
2. Ensure the air baffle is installed correctly.
3. Check the server airflow. Make sure that nothing is blocking the air from coming into or preventing the air from exiting the server.

- **80010901-1401ffff : Numeric sensor [NumericSensorElementName] going high (upper critical) has asserted. (CPU1 VR Temp)**

This message is for the use case when an implementation has detected an Upper Critical sensor going high has asserted.

May also be shown as 800109011401ffff or 0x800109011401ffff

Severity
Error

Serviceable
Yes

Automatically notify support
No

Alert Category
Critical - Temperature

SNMP Trap ID
0

CIM Information
Prefix: PLAT **ID:** 0494

User Response

1. Reduce the ambient temperature.
2. Ensure the air baffle is installed correctly.
3. Check the server airflow. Make sure that nothing is blocking the air from coming into or preventing the air from exiting the server.

- **80010901-1402ffff : Numeric sensor [NumericSensorElementName] going high (upper critical) has asserted. (CPU2 VR Temp)**

  This message is for the use case when an implementation has detected an Upper Critical sensor going high has asserted.

  May also be shown as 800109011402ffff or 0x800109011402ffff

  Severity
  Error

  Serviceable
  Yes

  Automatically notify support
  No

  Alert Category
  Critical - Temperature

  SNMP Trap ID
  0

  CIM Information
  Prefix: PLAT **ID:** 0494

  User Response

  1. Reduce the ambient temperature.
  2. Ensure the air baffle is installed correctly.
  3. Check the server airflow. Make sure that nothing is blocking the air from coming into or preventing the air from exiting the server.

- **80010901-1403ffff : Numeric sensor [NumericSensorElementName] going high (upper critical) has asserted. (DIMM AB VR Temp)**

  This message is for the use case when an implementation has detected an Upper Critical sensor going high has asserted.

  May also be shown as 800109011403ffff or 0x800109011403ffff

  Severity
  Error

  Serviceable
  Yes

  Automatically notify support
  No

Alert Category
Critical - Temperature

SNMP Trap ID
0

CIM Information
Prefix: PLAT **ID:** 0494

User Response

1. Reduce the ambient temperature.
2. Ensure the air baffle is installed correctly.
3. Check the server airflow. Make sure that nothing is blocking the air from coming into or preventing the air from exiting the server.

- **80010901-1404ffff : Numeric sensor [NumericSensorElementName] going high (upper critical) has asserted. (DIMM CD VR Temp)**

This message is for the use case when an implementation has detected an Upper Critical sensor going high has asserted.

May also be shown as 800109011404ffff or 0x800109011404ffff

Severity
Error

Serviceable
Yes

Automatically notify support
No

Alert Category
Critical - Temperature

SNMP Trap ID
0

CIM Information
Prefix: PLAT **ID:** 0494

User Response

1. Reduce the ambient temperature.
2. Ensure the air baffle is installed correctly.
3. Check the server airflow. Make sure that nothing is blocking the air from coming into or preventing the air from exiting the server.

- **80010901-1405ffff : Numeric sensor [NumericSensorElementName] going high (upper critical) has asserted. (DIMM EF VR Temp)**

This message is for the use case when an implementation has detected an Upper Critical sensor going high has asserted.

May also be shown as 800109011405ffff or 0x800109011405ffff

Severity
Error

Serviceable
Yes

Automatically notify support
No

Alert Category
Critical - Temperature

SNMP Trap ID
0

CIM Information
Prefix: PLAT **ID:** 0494

User Response

1. Reduce the ambient temperature.
2. Ensure the air baffle is installed correctly.
3. Check the server airflow. Make sure that nothing is blocking the air from coming into or preventing the air from exiting the server.

- **80010901-1406ffff : Numeric sensor [NumericSensorElementName] going high (upper critical) has asserted. (DIMM GH VR Temp)**

This message is for the use case when an implementation has detected an Upper Critical sensor going high has asserted.

May also be shown as 800109011406ffff or 0x800109011406ffff

Severity
Error

Serviceable
Yes

Automatically notify support
No

Alert Category
Critical - Temperature

SNMP Trap ID
0

CIM Information
Prefix: PLAT **ID:** 0494

User Response

1. Reduce the ambient temperature.
2. Ensure the air baffle is installed correctly.
3. Check the server airflow. Make sure that nothing is blocking the air from coming into or preventing the air from exiting the server.

- **80010901-2d01ffff : Numeric sensor [NumericSensorElementName] going high (upper critical) has asserted. (PCH Temp)**

This message is for the use case when an implementation has detected an Upper Critical sensor going high has asserted.

May also be shown as 800109012d01ffff or 0x800109012d01ffff

Severity
Error

Serviceable
Yes

Automatically notify support
No

Alert Category
Critical - Temperature

SNMP Trap ID
0

CIM Information
Prefix: PLAT **ID:** 0494

User Response

1. Reduce the ambient temperature.
2. Ensure the air baffle is installed correctly.
3. Check the server airflow. Make sure that nothing is blocking the air from coming into or preventing the air from exiting the server.

- **80010901-3701ffff : Numeric sensor [NumericSensorElementName] going high (upper critical) has asserted. (Ambient Temp)**

This message is for the use case when an implementation has detected an Upper Critical sensor going high has asserted.

May also be shown as 800109013701ffff or 0x800109013701ffff

Severity
Error

Serviceable
Yes

Automatically notify support
No

Alert Category
Critical - Temperature

SNMP Trap ID
0

CIM Information
Prefix: PLAT **ID:** 0494

User Response

1. Reduce the ambient temperature.
2. Ensure the air baffle is installed correctly.
3. Check the server airflow. Make sure that nothing is blocking the air from coming into or preventing the air from exiting the server.

- **80010902-0701ffff : Numeric sensor [NumericSensorElementName] going high (upper critical) has asserted. (SysBrd 12V)**

This message is for the use case when an implementation has detected an Upper Critical sensor going high has asserted.

May also be shown as 800109020701ffff or 0x800109020701ffff

Severity
Error

Serviceable
Yes

Automatically notify support
Yes

Alert Category
Critical - Voltage

SNMP Trap ID
1

CIM Information
Prefix: PLAT **ID:** 0494

User Response
If the specified sensor is Planar 3.3V or Planar 5V, (Trained technician only) replace the system board. If the specified sensor is Planar 12V, complete the following steps until the problem is solved:

1. Check power supply n LED.
2. Remove the failing power supply.
3. (Trained technician only) Replace the system board. (n = power supply number)

SysBrd 3.3V : SysBrd 5V :

- **80010b01-0f01ffff : Numeric sensor [NumericSensorElementName] going high (upper non-recoverable) has asserted. (REAR BP Temp A)**

This message is for the use case when an implementation has detected an Upper Non-recoverable sensor going high has asserted.

May also be shown as 80010b010f01ffff or 0x80010b010f01ffff

Severity
Error

Serviceable
Yes

Automatically notify support
No

Alert Category
Critical - Temperature

SNMP Trap ID
0

CIM Information
Prefix: PLAT **ID:** 0498

User Response

1. Make sure that the fans are operating, that there are no obstructions to the airflow (front and rear of the server), that the air baffle is in place and correctly installed, and that the server cover is installed and completely closed.
2. Check the ambient temperature. You must be operating within the specifications (see Server Features and specifications for more information).
3. Make sure that the heat sink for microprocessor n.

4. (Trained technician only) Replace system board.

- **80010b01-0f02ffff : Numeric sensor [NumericSensorElementName] going high (upper non-recoverable) has asserted. (REAR BP Temp B)**

  This message is for the use case when an implementation has detected an Upper Non-recoverable sensor going high has asserted.

  May also be shown as 80010b010f02ffff or 0x80010b010f02ffff

  Severity
  Error

  Serviceable
  Yes

  Automatically notify support
  No

  Alert Category
  Critical - Temperature

  SNMP Trap ID
  0

  CIM Information
  Prefix: PLAT **ID:** 0498

  User Response

  1. Make sure that the fans are operating, that there are no obstructions to the airflow (front and rear of the server), that the air baffle is in place and correctly installed, and that the server cover is installed and completely closed.
  2. Check the ambient temperature. You must be operating within the specifications (see Server Features and specifications for more information).
  3. Make sure that the heat sink for microprocessor n.
  4. (Trained technician only) Replace system board.

- **80010b01-1001ffff : Numeric sensor [NumericSensorElementName] going high (upper non-recoverable) has asserted. (PCI 1 Amb Temp)**

  This message is for the use case when an implementation has detected an Upper Non-recoverable sensor going high has asserted.

  May also be shown as 80010b011001ffff or 0x80010b011001ffff

  Severity
  Error

  Serviceable
  Yes

  Automatically notify support
  No

  Alert Category
  Critical - Temperature

  SNMP Trap ID
  0

  CIM Information

Prefix: PLAT **ID:** 0498

User Response

1. Make sure that the fans are operating, that there are no obstructions to the airflow (front and rear of the server), that the air baffle is in place and correctly installed, and that the server cover is installed and completely closed.
2. Check the ambient temperature. You must be operating within the specifications (see Server Features and specifications for more information).
3. Make sure that the heat sink for microprocessor n.
4. (Trained technician only) Replace system board.

RAID Amb Temp : RR PCI1 Amb Temp :

- **80010b01-1002ffff : Numeric sensor [NumericSensorElementName] going high (upper non-recoverable) has asserted. (PCI 2 Amb Temp)**

  This message is for the use case when an implementation has detected an Upper Non-recoverable sensor going high has asserted.

  May also be shown as 80010b011002ffff or 0x80010b011002ffff

  Severity
  Error

  Serviceable
  Yes

  Automatically notify support
  No

  Alert Category
  Critical - Temperature

  SNMP Trap ID
  0

  CIM Information
  Prefix: PLAT **ID:** 0498

  User Response

  1. Make sure that the fans are operating, that there are no obstructions to the airflow (front and rear of the server), that the air baffle is in place and correctly installed, and that the server cover is installed and completely closed.
  2. Check the ambient temperature. You must be operating within the specifications (see Server Features and specifications for more information).
  3. Make sure that the heat sink for microprocessor n.
  4. (Trained technician only) Replace system board.

  RR PCI2 Amb Temp :

- **80010b01-1003ffff : Numeric sensor [NumericSensorElementName] going high (upper non-recoverable) has asserted. (PCI 3 Amb Temp)**

  This message is for the use case when an implementation has detected an Upper Non-recoverable sensor going high has asserted.

  May also be shown as 80010b011003ffff or 0x80010b011003ffff

  Severity

Error

Serviceable
Yes

Automatically notify support
No

Alert Category
Critical - Temperature

SNMP Trap ID
0

CIM Information
Prefix: PLAT **ID:** 0498

User Response

1. Make sure that the fans are operating, that there are no obstructions to the airflow (front and rear of the server), that the air baffle is in place and correctly installed, and that the server cover is installed and completely closed.
2. Check the ambient temperature. You must be operating within the specifications (see Server Features and specifications for more information).
3. Make sure that the heat sink for microprocessor n.
4. (Trained technician only) Replace system board.

RR PCI3 Amb Temp :

- **80010b01-1301ffff : Numeric sensor [NumericSensorElementName] going high (upper non-recoverable) has asserted. (PSU 1 Amb Temp)**

This message is for the use case when an implementation has detected an Upper Non-recoverable sensor going high has asserted.

May also be shown as 80010b011301ffff or 0x80010b011301ffff

Severity
Error

Serviceable
Yes

Automatically notify support
No

Alert Category
Critical - Temperature

SNMP Trap ID
0

CIM Information
Prefix: PLAT **ID:** 0498

User Response

1. Make sure that the fans are operating, that there are no obstructions to the airflow (front and rear of the server), that the air baffle is in place and correctly installed, and that the server cover is installed and completely closed.
2. Check the ambient temperature. You must be operating within the specifications (see Server Features and specifications for more information).

3. Make sure that the heat sink for microprocessor n.
4. (Trained technician only) Replace system board.

- **80010b01-1302ffff : Numeric sensor [NumericSensorElementName] going high (upper non-recoverable) has asserted. (PSU 2 Amb Temp)**

  This message is for the use case when an implementation has detected an Upper Non-recoverable sensor going high has asserted.

  May also be shown as 80010b011302ffff or 0x80010b011302ffff

  Severity
  Error

  Serviceable
  Yes

  Automatically notify support
  No

  Alert Category
  Critical - Temperature

  SNMP Trap ID
  0

  CIM Information
  Prefix: PLAT **ID:** 0498

  User Response

  1. Make sure that the fans are operating, that there are no obstructions to the airflow (front and rear of the server), that the air baffle is in place and correctly installed, and that the server cover is installed and completely closed.
  2. Check the ambient temperature. You must be operating within the specifications (see Server Features and specifications for more information).
  3. Make sure that the heat sink for microprocessor n.
  4. (Trained technician only) Replace system board.

- **80010b01-1401ffff : Numeric sensor [NumericSensorElementName] going high (upper non-recoverable) has asserted. (CPU1 VR Temp)**

  This message is for the use case when an implementation has detected an Upper Non-recoverable sensor going high has asserted.

  May also be shown as 80010b011401ffff or 0x80010b011401ffff

  Severity
  Error

  Serviceable
  Yes

  Automatically notify support
  No

  Alert Category
  Critical - Temperature

  SNMP Trap ID
  0

CIM Information
Prefix: PLAT **ID:** 0498

User Response

1. Make sure that the fans are operating, that there are no obstructions to the airflow (front and rear of the server), that the air baffle is in place and correctly installed, and that the server cover is installed and completely closed.
2. Check the ambient temperature. You must be operating within the specifications (see Server Features and specifications for more information).
3. Make sure that the heat sink for microprocessor n.
4. (Trained technician only) Replace system board.

- **80010b01-1402ffff : Numeric sensor [NumericSensorElementName] going high (upper non-recoverable) has asserted. (CPU2 VR Temp)**

This message is for the use case when an implementation has detected an Upper Non-recoverable sensor going high has asserted.

May also be shown as 80010b011402ffff or 0x80010b011402ffff

Severity
Error

Serviceable
Yes

Automatically notify support
No

Alert Category
Critical - Temperature

SNMP Trap ID
0

CIM Information
Prefix: PLAT **ID:** 0498

User Response

1. Make sure that the fans are operating, that there are no obstructions to the airflow (front and rear of the server), that the air baffle is in place and correctly installed, and that the server cover is installed and completely closed.
2. Check the ambient temperature. You must be operating within the specifications (see Server Features and specifications for more information).
3. Make sure that the heat sink for microprocessor n.
4. (Trained technician only) Replace system board.

- **80010b01-1403ffff : Numeric sensor [NumericSensorElementName] going high (upper non-recoverable) has asserted. (DIMM AB VR Temp)**

This message is for the use case when an implementation has detected an Upper Non-recoverable sensor going high has asserted.

May also be shown as 80010b011403ffff or 0x80010b011403ffff

Severity
Error

Serviceable
Yes

Automatically notify support
No

Alert Category
Critical - Temperature

SNMP Trap ID
0

CIM Information
Prefix: PLAT **ID:** 0498

User Response

1. Make sure that the fans are operating, that there are no obstructions to the airflow (front and rear of the server), that the air baffle is in place and correctly installed, and that the server cover is installed and completely closed.
2. Check the ambient temperature. You must be operating within the specifications (see Server Features and specifications for more information).
3. Make sure that the heat sink for microprocessor n.
4. (Trained technician only) Replace system board.

- **80010b01-1404ffff : Numeric sensor [NumericSensorElementName] going high (upper non-recoverable) has asserted. (DIMM CD VR Temp)**

This message is for the use case when an implementation has detected an Upper Non-recoverable sensor going high has asserted.

May also be shown as 80010b011404ffff or 0x80010b011404ffff

Severity
Error

Serviceable
Yes

Automatically notify support
No

Alert Category
Critical - Temperature

SNMP Trap ID
0

CIM Information
Prefix: PLAT **ID:** 0498

User Response

1. Make sure that the fans are operating, that there are no obstructions to the airflow (front and rear of the server), that the air baffle is in place and correctly installed, and that the server cover is installed and completely closed.
2. Check the ambient temperature. You must be operating within the specifications (see Server Features and specifications for more information).
3. Make sure that the heat sink for microprocessor n.
4. (Trained technician only) Replace system board.

- **80010b01-1405ffff : Numeric sensor [NumericSensorElementName] going high (upper non-recoverable) has asserted. (DIMM EF VR Temp)**

  This message is for the use case when an implementation has detected an Upper Non-recoverable sensor going high has asserted.

  May also be shown as 80010b011405ffff or 0x80010b011405ffff

  Severity
  Error

  Serviceable
  Yes

  Automatically notify support
  No

  Alert Category
  Critical - Temperature

  SNMP Trap ID
  0

  CIM Information
  Prefix: PLAT **ID:** 0498

  User Response

  1. Make sure that the fans are operating, that there are no obstructions to the airflow (front and rear of the server), that the air baffle is in place and correctly installed, and that the server cover is installed and completely closed.
  2. Check the ambient temperature. You must be operating within the specifications (see Server Features and specifications for more information).
  3. Make sure that the heat sink for microprocessor n.
  4. (Trained technician only) Replace system board.

- **80010b01-1406ffff : Numeric sensor [NumericSensorElementName] going high (upper non-recoverable) has asserted. (DIMM GH VR Temp)**

  This message is for the use case when an implementation has detected an Upper Non-recoverable sensor going high has asserted.

  May also be shown as 80010b011406ffff or 0x80010b011406ffff

  Severity
  Error

  Serviceable
  Yes

  Automatically notify support
  No

  Alert Category
  Critical - Temperature

  SNMP Trap ID
  0

  CIM Information
  Prefix: PLAT **ID:** 0498

User Response

1. Make sure that the fans are operating, that there are no obstructions to the airflow (front and rear of the server), that the air baffle is in place and correctly installed, and that the server cover is installed and completely closed.
2. Check the ambient temperature. You must be operating within the specifications (see Server Features and specifications for more information).
3. Make sure that the heat sink for microprocessor n.
4. (Trained technician only) Replace system board.

- **80010b01-2d01ffff : Numeric sensor [NumericSensorElementName] going high (upper non-recoverable) has asserted. (PCH Temp)**

  This message is for the use case when an implementation has detected an Upper Non-recoverable sensor going high has asserted.

  May also be shown as 80010b012d01ffff or 0x80010b012d01ffff

  Severity
  Error

  Serviceable
  Yes

  Automatically notify support
  No

  Alert Category
  Critical - Temperature

  SNMP Trap ID
  0

  CIM Information
  Prefix: PLAT **ID:** 0498

  User Response

  1. Make sure that the fans are operating, that there are no obstructions to the airflow (front and rear of the server), that the air baffle is in place and correctly installed, and that the server cover is installed and completely closed.
  2. Check the ambient temperature. You must be operating within the specifications (see Server Features and specifications for more information).
  3. Make sure that the heat sink for microprocessor n.
  4. (Trained technician only) Replace system board.

- **80010b01-3701ffff : Numeric sensor [NumericSensorElementName] going high (upper non-recoverable) has asserted. (Ambient Temp)**

  This message is for the use case when an implementation has detected an Upper Non-recoverable sensor going high has asserted.

  May also be shown as 80010b013701ffff or 0x80010b013701ffff

  Severity
  Error

  Serviceable
  Yes

Automatically notify support
No

Alert Category
Critical - Temperature

SNMP Trap ID
0

CIM Information
Prefix: PLAT **ID:** 0498

User Response

1. Make sure that the fans are operating, that there are no obstructions to the airflow (front and rear of the server), that the air baffle is in place and correctly installed, and that the server cover is installed and completely closed.
2. Check the ambient temperature. You must be operating within the specifications (see Server Features and specifications for more information).
3. Make sure that the heat sink for microprocessor n.
4. (Trained technician only) Replace system board.

- **80030006-2101ffff : Sensor [SensorElementName] has deasserted. (Sig Verify Fail)**

This message is for the use case when an implementation has detected a Sensor has deasserted.

May also be shown as 800300062101ffff or 0x800300062101ffff

Severity
Info

Serviceable
No

Automatically notify support
No

Alert Category
System - Other

SNMP Trap ID

CIM Information
Prefix: PLAT **ID:** 0509

User Response
No action; information only.

- **80030012-2301ffff : Sensor [SensorElementName] has deasserted. (OS RealTime Mod)**

This message is for the use case when an implementation has detected a Sensor has deasserted.

May also be shown as 800300122301ffff or 0x800300122301ffff

Severity
Info

Serviceable
No

Automatically notify support
No

Alert Category
System - Other

SNMP Trap ID

CIM Information
Prefix: PLAT **ID:** 0509

User Response
No action; information only.

- **80030021-0782ffff : Sensor [SensorElementName] has deasserted. (PCIe Dev LK Down)**

  This message is for the use case when an implementation has detected a Sensor has deasserted.

  May also be shown as 800300210782ffff or 0x800300210782ffff

  Severity
  Info

  Serviceable
  No

  Automatically notify support
  No

  Alert Category
  System - Other

  SNMP Trap ID

  CIM Information
  Prefix: PLAT **ID:** 0509

  User Response
  No action; information only.

- **80030108-1301ffff : Sensor [SensorElementName] has asserted. (PS Heavy Load)**

  This message is for the use case when an implementation has detected a Sensor has asserted.

  May also be shown as 800301081301ffff or 0x800301081301ffff

  Severity
  Info

  Serviceable
  No

  Automatically notify support
  No

  Alert Category
  System - Other

  SNMP Trap ID

  CIM Information
  Prefix: PLAT **ID:** 0508

  User Response

1. Replace the power supply with higher rated power.
2. Reduce the total power consumption by removing newly added or unused option like drives or adapters.

- **8003010c-2581ffff : Sensor [SensorElementName] has asserted. (Non-Auth DIMMs)**

  This message is for the use case when an implementation has detected a Sensor has asserted.

  May also be shown as 8003010c2581ffff or 0x8003010c2581ffff

  Severity
  Info

  Serviceable
  No

  Automatically notify support
  No

  Alert Category
  System - Other

  SNMP Trap ID

  CIM Information
  Prefix: PLAT **ID:** 0508

  User Response

  1. Replace the power supply with higher rated power.
  2. Reduce the total power consumption by removing newly added or unused option like drives or adapters.

- **8003010f-2101ffff : Sensor [SensorElementName] has asserted. (IMM FW Corrupted)**

  This message is for the use case when an implementation has detected a Sensor has asserted.

  May also be shown as 8003010f2101ffff or 0x8003010f2101ffff

  Severity
  Info

  Serviceable
  No

  Automatically notify support
  No

  Alert Category
  System - Other

  SNMP Trap ID

  CIM Information
  Prefix: PLAT **ID:** 0508

  User Response

  1. Replace the power supply with higher rated power.
  2. Reduce the total power consumption by removing newly added or unused option like drives or adapters.

- **80030112-0601ffff : Sensor [SensorElementName] has asserted. (SMM Mode)**

  This message is for the use case when an implementation has detected a Sensor has asserted.

  May also be shown as 800301120601ffff or 0x800301120601ffff

  Severity
  Info

  Serviceable
  No

  Automatically notify support
  No

  Alert Category
  System - Other

  SNMP Trap ID

  CIM Information
  Prefix: PLAT **ID:** 0508

  User Response

  1. Replace the power supply with higher rated power.
  2. Reduce the total power consumption by removing newly added or unused option like drives or adapters.

  SMM Monitor :

- **80030121-0782ffff : Sensor [SensorElementName] has asserted. (PCIe Dev LK Down)**

  This message is for the use case when an implementation has detected a Sensor has asserted.

  May also be shown as 800301210782ffff or 0x800301210782ffff

  Severity
  Info

  Serviceable
  No

  Automatically notify support
  No

  Alert Category
  System - Other

  SNMP Trap ID

  CIM Information
  Prefix: PLAT **ID:** 0508

  User Response

  1. Replace the power supply with higher rated power.
  2. Reduce the total power consumption by removing newly added or unused option like drives or adapters.

- **80050112-0d01ffff : Sensor [SensorElementName] has indicated limit exceeded. (CPU/HDD Config)**

  This message is for the use case when an implementation has detected a Sensor limit was exceeded.

May also be shown as 800501120d01ffff or 0x800501120d01ffff

Severity
Info

Serviceable
No

Automatically notify support
No

Alert Category
System - Other

SNMP Trap ID

CIM Information
Prefix: PLAT **ID:** 0512

User Response
No action; information only.

- **8007000d-2582ffff : Sensor [SensorElementName] has transitioned to normal state. (RAID Vol State)**

  This message is for the use case when an implementation has detected a Sensor transition to the normal state.

  May also be shown as 8007000d2582ffff or 0x8007000d2582ffff

  Severity
  Info

  Serviceable
  No

  Automatically notify support
  No

  Alert Category
  Warning - Other

  SNMP Trap ID
  60

  CIM Information
  Prefix: PLAT **ID:** 0518

  User Response
  No action; information only.

- **80070101-2c01ffff : Sensor [SensorElementName] has transitioned from normal to non-critical state. (ML2 OverTemp)**

  This message is for the use case when an implementation has detected a Sensor transitioned to non-critical from normal.

  May also be shown as 800701012c01ffff or 0x800701012c01ffff

  Severity
  Warning

  Serviceable

Yes

Automatically notify support
No

Alert Category
Warning - Temperature

SNMP Trap ID
12

CIM Information
Prefix: PLAT **ID:** 0520

User Response
None

- **8007010d-2582ffff : Sensor [SensorElementName] has transitioned from normal to non-critical state. (RAID Vol State)**

  This message is for the use case when an implementation has detected a Sensor transitioned to non-critical from normal.

  May also be shown as 8007010d2582ffff or 0x8007010d2582ffff

  Severity
  Warning

  Serviceable
  Yes

  Automatically notify support
  No

  Alert Category
  Warning - Other

  SNMP Trap ID
  60

  CIM Information
  Prefix: PLAT **ID:** 0520

  User Response
  None

- **8007010f-2201ffff : Sensor [SensorElementName] has transitioned from normal to non-critical state. (GPT Status)**

  This message is for the use case when an implementation has detected a Sensor transitioned to non-critical from normal.

  May also be shown as 8007010f2201ffff or 0x8007010f2201ffff

  Severity
  Warning

  Serviceable
  Yes

  Automatically notify support
  No

  Alert Category

Warning - Other

SNMP Trap ID
60

CIM Information
Prefix: PLAT **ID:** 0520

User Response
Complete the following step to solve PCI I/O resource errors:

1. Check the Lenovo support site for service bulletins or firmware updates that apply to this GPT error.
2. Set the UEFI setting DISK GPT Recovery to Automatic.
3. Replace the corrupt disk.

- **8007010f-2582ffff : Sensor [SensorElementName] has transitioned from normal to non-critical state. (I/O Resources)**

This message is for the use case when an implementation has detected a Sensor transitioned to non-critical from normal.

May also be shown as 8007010f2582ffff or 0x8007010f2582ffff

Severity
Warning

Serviceable
Yes

Automatically notify support
No

Alert Category
Warning - Other

SNMP Trap ID
60

CIM Information
Prefix: PLAT **ID:** 0520

User Response
Complete the following step to solve PCI I/O resource errors:

1. Go to F1 Setup-> System Settings-> Device and I/O ports-> PCI 64 bit Resource and choose enable.

- **80070112-0101ffff : Sensor [SensorElementName] has transitioned from normal to non-critical state. (Sys Config Err)**

This message is for the use case when an implementation has detected a Sensor transitioned to non-critical from normal.

May also be shown as 800701120101ffff or 0x800701120101ffff

Severity
Warning

Serviceable
Yes

Automatically notify support

No

Alert Category
Warning - Other

SNMP Trap ID
60

CIM Information
Prefix: PLAT **ID:** 0520

User Response
None

- **80070114-2201ffff : Sensor [SensorElementName] has transitioned from normal to non-critical state. (TPM Phy Pres Set)**

  This message is for the use case when an implementation has detected a Sensor transitioned to non-critical from normal.

  May also be shown as 800701142201ffff or 0x800701142201ffff

  Severity
  Warning

  Serviceable
  Yes

  Automatically notify support
  No

  Alert Category
  Warning - Other

  SNMP Trap ID
  60

  CIM Information
  Prefix: PLAT **ID:** 0520

  User Response

  1. Complete the administrative tasks that require the TPM physical presence switch to be in the ON position.
  2. Restore the physical presence switch to the OFF position.
  3. Reboot the system.
  4. (Trained technician only) If the error continues, replace the planar.

- **80070121-0782ffff : Sensor [SensorElementName] has transitioned from normal to non-critical state. (PCIe Dev Status)**

  This message is for the use case when an implementation has detected a Sensor transitioned to non-critical from normal.

  May also be shown as 800701210782ffff or 0x800701210782ffff

  Severity
  Warning

  Serviceable
  Yes

  Automatically notify support

No

Alert Category
Warning - Other

SNMP Trap ID
60

CIM Information
Prefix: PLAT **ID:** 0520

User Response
None

- **80070125-2583ffff : Sensor [SensorElementName] has transitioned from normal to non-critical state. (X8 PCI 2 Config)**

  This message is for the use case when an implementation has detected a Sensor transitioned to non-critical from normal.

  May also be shown as 800701252583ffff or 0x800701252583ffff

  Severity
  Warning

  Serviceable
  Yes

  Automatically notify support
  No

  Alert Category
  Warning - Other

  SNMP Trap ID
  60

  CIM Information
  Prefix: PLAT **ID:** 0520

  User Response
  None X8 PCI 3 Config :

- **80070128-2e01ffff : Sensor [SensorElementName] has transitioned from normal to non-critical state. (ME Recovery)**

  This message is for the use case when an implementation has detected a Sensor transitioned to non-critical from normal.

  May also be shown as 800701282e01ffff or 0x800701282e01ffff

  Severity
  Warning

  Serviceable
  Yes

  Automatically notify support
  No

  Alert Category
  Warning - Other

  SNMP Trap ID

CIM Information
Prefix: PLAT **ID:** 0520

User Response

1. Restart IMM. If the error doesn't disappear, please proceed step 2.
2. Update to the latest level of iMM/uEFI code, please proceed step 3.
3. Replace node.

- **80070201-0301ffff : Sensor [SensorElementName] has transitioned to critical from a less severe state. (CPU 1 OverTemp)**

This message is for the use case when an implementation has detected a Sensor transitioned to critical from less severe.

May also be shown as 800702010301ffff or 0x800702010301ffff

Severity
Error

Serviceable
Yes

Automatically notify support
No

Alert Category
Critical - Temperature

SNMP Trap ID
0

CIM Information
Prefix: PLAT **ID:** 0522

User Response

1. Make sure that the fans are operating, that there are no obstructions to the airflow (front and rear of the server), that the air baffles are in place and correctly installed, and that the server cover is installed and completely closed.
2. Check the ambient temperature. You must be operating within the specifications (see Features and specifications for more information).
3. Make sure that the heat sink for microprocessor n is installed correctly.
4. (Trained technician only) Replace microprocessor n. (n = microprocessor number)

- **80070201-0302ffff : Sensor [SensorElementName] has transitioned to critical from a less severe state. (CPU 2 OverTemp)**

This message is for the use case when an implementation has detected a Sensor transitioned to critical from less severe.

May also be shown as 800702010302ffff or 0x800702010302ffff

Severity
Error

Serviceable
Yes

Automatically notify support

No

Alert Category
Critical - Temperature

SNMP Trap ID
0

CIM Information
Prefix: PLAT **ID:** 0522

User Response

1. Make sure that the fans are operating, that there are no obstructions to the airflow (front and rear of the server), that the air baffles are in place and correctly installed, and that the server cover is installed and completely closed.
2. Check the ambient temperature. You must be operating within the specifications (see Features and specifications for more information).
3. Make sure that the heat sink for microprocessor n is installed correctly.
4. (Trained technician only) Replace microprocessor n. (n = microprocessor number)

- **80070201-1101ffff : Sensor [SensorElementName] has transitioned to critical from a less severe state. (PCI 1 Temp)**

This message is for the use case when an implementation has detected a Sensor transitioned to critical from less severe.

May also be shown as 800702011101ffff or 0x800702011101ffff

Severity
Error

Serviceable
Yes

Automatically notify support
No

Alert Category
Critical - Temperature

SNMP Trap ID
0

CIM Information
Prefix: PLAT **ID:** 0522

User Response

1. Make sure that the fans are operating, that there are no obstructions to the airflow (front and rear of the server), that the air baffles are in place and correctly installed, and that the server cover is installed and completely closed.
2. Check the ambient temperature. You must be operating within the specifications (see Features and specifications for more information).
3. Make sure that the heat sink for microprocessor n is installed correctly.
4. (Trained technician only) Replace microprocessor n. (n = microprocessor number)

- **80070201-1102ffff : Sensor [SensorElementName] has transitioned to critical from a less severe state. (PCI 2 Temp)**

This message is for the use case when an implementation has detected a Sensor transitioned to critical from less severe.

May also be shown as 800702011102ffff or 0x800702011102ffff

Severity
Error

Serviceable
Yes

Automatically notify support
No

Alert Category
Critical - Temperature

SNMP Trap ID
0

CIM Information
Prefix: PLAT **ID:** 0522

User Response

1. Make sure that the fans are operating, that there are no obstructions to the airflow (front and rear of the server), that the air baffles are in place and correctly installed, and that the server cover is installed and completely closed.
2. Check the ambient temperature. You must be operating within the specifications (see Features and specifications for more information).
3. Make sure that the heat sink for microprocessor n is installed correctly.
4. (Trained technician only) Replace microprocessor n. (n = microprocessor number)

- **80070201-1103ffff : Sensor [SensorElementName] has transitioned to critical from a less severe state. (PCI 3 Temp)**

This message is for the use case when an implementation has detected a Sensor transitioned to critical from less severe.

May also be shown as 800702011103ffff or 0x800702011103ffff

Severity
Error

Serviceable
Yes

Automatically notify support
No

Alert Category
Critical - Temperature

SNMP Trap ID
0

CIM Information
Prefix: PLAT **ID:** 0522

User Response

1. Make sure that the fans are operating, that there are no obstructions to the airflow (front and rear of the server), that the air baffles are in place and correctly installed, and that the server cover is installed and completely closed.
2. Check the ambient temperature. You must be operating within the specifications (see Features and specifications for more information).
3. Make sure that the heat sink for microprocessor n is installed correctly.
4. (Trained technician only) Replace microprocessor n. (n = microprocessor number)

- **80070202-0701ffff : Sensor [SensorElementName] has transitioned to critical from a less severe state. (SysBrd Vol Fault)**

  This message is for the use case when an implementation has detected a Sensor transitioned to critical from less severe.

  May also be shown as 800702020701ffff or 0x800702020701ffff

  Severity
  Error

  Serviceable
  Yes

  Automatically notify support
  No

  Alert Category
  Critical - Voltage

  SNMP Trap ID
  1

  CIM Information
  Prefix: PLAT **ID:** 0522

  User Response

  1. Check the system-event log.
  2. Check for an error LED on the system board.
  3. Replace any failing device.
  4. Check for a server firmware update. Important: Some cluster solutions require specific code levels or coordinated code updates. If the device is part of a cluster solution, verify that the latest level of code is supported for the cluster solution before you update the code.
  5. (Trained technician only) Replace the system board.

- **80070204-0a01ffff : Sensor [SensorElementName] has transitioned to critical from a less severe state. (PS 1 Fan Fault)**

  This message is for the use case when an implementation has detected a Sensor transitioned to critical from less severe.

  May also be shown as 800702040a01ffff or 0x800702040a01ffff

  Severity
  Error

  Serviceable
  Yes

  Automatically notify support

No

Alert Category
Critical - Fan Failure

SNMP Trap ID
11

CIM Information
Prefix: PLAT **ID:** 0522

User Response

1. Make sure that there are no obstructions, such as bundled cables, to the airflow from the power-supply fan.
2. Replace power supply n. (n = power supply number)

- **80070204-0a02ffff : Sensor [SensorElementName] has transitioned to critical from a less severe state. (PS 2 Fan Fault)**

  This message is for the use case when an implementation has detected a Sensor transitioned to critical from less severe.

  May also be shown as 800702040a02ffff or 0x800702040a02ffff

  Severity
  Error

  Serviceable
  Yes

  Automatically notify support
  No

  Alert Category
  Critical - Fan Failure

  SNMP Trap ID
  11

  CIM Information
  Prefix: PLAT **ID:** 0522

  User Response

  1. Make sure that there are no obstructions, such as bundled cables, to the airflow from the power-supply fan.
  2. Replace power supply n. (n = power supply number)

- **80070208-0a01ffff : Sensor [SensorElementName] has transitioned to critical from a less severe state. (PS 1 Therm Fault)**

  This message is for the use case when an implementation has detected a Sensor transitioned to critical from less severe.

  May also be shown as 800702080a01ffff or 0x800702080a01ffff

  Severity
  Error

  Serviceable
  Yes

  Automatically notify support

No

Alert Category
Critical - Power

SNMP Trap ID
4

CIM Information
Prefix: PLAT **ID:** 0522

User Response

1. Make sure that there are no obstructions, such as bundled cables, to the airflow from the power-supply fan.
2. Use the Lenovo Power Configurator utility to ensure current system power consumption is under limitation. For more information and to download the utility, go to https://www.ibm.com/support/entry/myportal/docdisplay?lndocid=LNVO-PWRCONF.
3. Replace power supply n. (n = power supply number)

- **80070208-0a02ffff : Sensor [SensorElementName] has transitioned to critical from a less severe state. (PS 2 Therm Fault)**

  This message is for the use case when an implementation has detected a Sensor transitioned to critical from less severe.

  May also be shown as 800702080a02ffff or 0x800702080a02ffff

  Severity
  Error

  Serviceable
  Yes

  Automatically notify support
  No

  Alert Category
  Critical - Power

  SNMP Trap ID
  4

  CIM Information
  Prefix: PLAT **ID:** 0522

  User Response

  1. Make sure that there are no obstructions, such as bundled cables, to the airflow from the power-supply fan.
  2. Use the Lenovo Power Configurator utility to ensure current system power consumption is under limitation. For more information and to download the utility, go to https://www.ibm.com/support/entry/myportal/docdisplay?lndocid=LNVO-PWRCONF.
  3. Replace power supply n. (n = power supply number)

- **8007020d-2582ffff : Sensor [SensorElementName] has transitioned to critical from a less severe state. (RAID Vol State)**

  This message is for the use case when an implementation has detected a Sensor transitioned to critical from less severe.

  May also be shown as 8007020d2582ffff or 0x8007020d2582ffff

Severity
Error

Serviceable
Yes

Automatically notify support
No

Alert Category
Critical - Other

SNMP Trap ID
50

CIM Information
Prefix: PLAT **ID:** 0522

User Response
None

- **8007020f-2201ffff : Sensor [SensorElementName] has transitioned to critical from a less severe state. (TXT ACM Module)**

  This message is for the use case when an implementation has detected a Sensor transitioned to critical from less severe.

  May also be shown as 8007020f2201ffff or 0x8007020f2201ffff

  Severity
  Error

  Serviceable
  Yes

  Automatically notify support
  No

  Alert Category
  Critical - Other

  SNMP Trap ID
  50

  CIM Information
  Prefix: PLAT **ID:** 0522

  User Response

  1. If enabling TXT is not required, disable TXT from the Setup Utility.
  2. If enabling TXT is required, verify that the TPM is enabled and activated from the Setup Utility.
  3. If the problem remains, contact your service representative.

- **8007020f-2582ffff : Sensor [SensorElementName] has transitioned to critical from a less severe state. (I/O Resources)**

  This message is for the use case when an implementation has detected a Sensor transitioned to critical from less severe.

  May also be shown as 8007020f2582ffff or 0x8007020f2582ffff

  Severity
  Error

Serviceable
Yes

Automatically notify support
No

Alert Category
Critical - Other

SNMP Trap ID
50

CIM Information
Prefix: PLAT **ID:** 0522

User Response
Complete the following step to solve PCI I/O resource errors:

1. Go to F1 Setup-> System Settings-> Device and I/O ports-> PCI 64 bit Resource and choose enable.

- **80070214-2201ffff : Sensor [SensorElementName] has transitioned to critical from a less severe state. (TPM Lock)**

This message is for the use case when an implementation has detected a Sensor transitioned to critical from less severe.

May also be shown as 800702142201ffff or 0x800702142201ffff

Severity
Error

Serviceable
No

Automatically notify support
No

Alert Category
Critical - Other

SNMP Trap ID
50

CIM Information
Prefix: PLAT **ID:** 0522

User Response

1. Update the server firmware (see Recovering the server firmware).
2. If the problem persists, (trained technician only) replace the system board (see Removing the system board and Installing the system board).

- **80070219-0701ffff : Sensor [SensorElementName] has transitioned to critical from a less severe state. (SysBrd Fault)**

This message is for the use case when an implementation has detected a Sensor transitioned to critical from less severe.

May also be shown as 800702190701ffff or 0x800702190701ffff

Severity
Error

Serviceable
Yes

Automatically notify support
No

Alert Category
Critical - Other

SNMP Trap ID
50

CIM Information
Prefix: PLAT **ID:** 0522

User Response

1. Check for an error LED on the system board.
2. Check the system-event log.
3. Check for the system firmware version and update to the latest version. Important: Some cluster solutions require specific code levels or coordinated code updates. If the device is part of a cluster solution, verify that the latest level of code is supported for the cluster solution before you update the code.
4. Unplug and restore AC power cord, then, perform step 1 and 2 again.
5. If problems still occurred, (trained technician only) replace the system board.

- **8007021b-0301ffff : Sensor [SensorElementName] has transitioned to critical from a less severe state. (CPU 1 QPILinkErr)**

This message is for the use case when an implementation has detected a Sensor transitioned to critical from less severe.

May also be shown as 8007021b0301ffff or 0x8007021b0301ffff

Severity
Error

Serviceable
Yes

Automatically notify support
No

Alert Category
Critical - Other

SNMP Trap ID
50

CIM Information
Prefix: PLAT **ID:** 0522

User Response

1. Check for a server firmware update.
2. Make sure that the installed microprocessors are compatible.
3. Make sure the microprocessor 2 expansion board is installed correctly (see Installing the microprocessor 2 expansion board).
4. (Trained technician only) Replace microprocessor 2.
5. (Trained technician only) Replace microprocessor 2 expansion board.

- **8007021b-0302ffff : Sensor [SensorElementName] has transitioned to critical from a less severe state. (CPU 2 QPILinkErr)**

  This message is for the use case when an implementation has detected a Sensor transitioned to critical from less severe.

  May also be shown as 8007021b0302ffff or 0x8007021b0302ffff

  Severity
  Error

  Serviceable
  Yes

  Automatically notify support
  No

  Alert Category
  Critical - Other

  SNMP Trap ID
  50

  CIM Information
  Prefix: PLAT **ID:** 0522

  User Response

  1. Check for a server firmware update.
  2. Make sure that the installed microprocessors are compatible.
  3. Make sure the microprocessor 2 expansion board is installed correctly (see Installing the microprocessor 2 expansion board).
  4. (Trained technician only) Replace microprocessor 2.
  5. (Trained technician only) Replace microprocessor 2 expansion board.

- **80070221-0782ffff : Sensor [SensorElementName] has transitioned to critical from a less severe state. (PCIe Dev Status)**

  This message is for the use case when an implementation has detected a Sensor transitioned to critical from less severe.

  May also be shown as 800702210782ffff or 0x800702210782ffff

  Severity
  Error

  Serviceable
  Yes

  Automatically notify support
  No

  Alert Category
  Critical - Other

  SNMP Trap ID
  50

  CIM Information
  Prefix: PLAT **ID:** 0522

  User Response

None

- **80070228-2e01ffff : Sensor [SensorElementName] has transitioned to critical from a less severe state. (IPMB IO Error)**

  This message is for the use case when an implementation has detected a Sensor transitioned to critical from less severe.

  May also be shown as 800702282e01ffff or 0x800702282e01ffff

  Severity
  Error

  Serviceable
  Yes

  Automatically notify support
  No

  Alert Category
  Critical - Other

  SNMP Trap ID
  50

  CIM Information
  Prefix: PLAT **ID:** 0522

  User Response
  If the specified sensor is IPMB IO Error, Me Error or ME Flash Error, complete the following steps until the problem is solved:

  1. Restart IMM. If the error still appears, proceed step 2.
  2. Update the firmware (UEFI and IMM) to the latest level. If the error still appears, proceed step 3.
  3. Replace the node.

  ME Error : ME Flash Error :

- **80070301-0301ffff : Sensor [SensorElementName] has transitioned to non-recoverable from a less severe state. (CPU 1 OverTemp)**

  This message is for the use case when an implementation has detected a Sensor transitioned to non-recoverable from less severe.

  May also be shown as 800703010301ffff or 0x800703010301ffff

  Severity
  Error

  Serviceable
  Yes

  Automatically notify support
  No

  Alert Category
  Critical - Temperature

  SNMP Trap ID
  0

  CIM Information
  Prefix: PLAT **ID:** 0524

User Response

1. Make sure that the fans are operating, that there are no obstructions to the airflow (front and rear of the server), that the air baffle is in place and correctly installed, and that the server cover is installed and completely closed.
2. Check the ambient temperature. You must be operating within the specifications (see Server Features and specifications for more information).
3. Make sure that the heat sink for microprocessor n.
4. (Trained technician only) Replace microprocessor n. (n = microprocessor number)

- **80070301-0302ffff : Sensor [SensorElementName] has transitioned to non-recoverable from a less severe state. (CPU 2 OverTemp)**

  This message is for the use case when an implementation has detected a Sensor transitioned to non-recoverable from less severe.

  May also be shown as 800703010302ffff or 0x800703010302ffff

  Severity
  Error

  Serviceable
  Yes

  Automatically notify support
  No

  Alert Category
  Critical - Temperature

  SNMP Trap ID
  0

  CIM Information
  Prefix: PLAT **ID:** 0524

  User Response

  1. Make sure that the fans are operating, that there are no obstructions to the airflow (front and rear of the server), that the air baffle is in place and correctly installed, and that the server cover is installed and completely closed.
  2. Check the ambient temperature. You must be operating within the specifications (see Server Features and specifications for more information).
  3. Make sure that the heat sink for microprocessor n.
  4. (Trained technician only) Replace microprocessor n. (n = microprocessor number)

- **80070301-1101ffff : Sensor [SensorElementName] has transitioned to non-recoverable from a less severe state. (PCI 1 Temp)**

  This message is for the use case when an implementation has detected a Sensor transitioned to non-recoverable from less severe.

  May also be shown as 800703011101ffff or 0x800703011101ffff

  Severity
  Error

  Serviceable
  Yes

Automatically notify support
No

Alert Category
Critical - Temperature

SNMP Trap ID
0

CIM Information
Prefix: PLAT **ID:** 0524

User Response

1. Make sure that the fans are operating, that there are no obstructions to the airflow (front and rear of the server), that the air baffle is in place and correctly installed, and that the server cover is installed and completely closed.
2. Check the ambient temperature. You must be operating within the specifications (see Server Features and specifications for more information).
3. Make sure that the heat sink for microprocessor n.
4. (Trained technician only) Replace microprocessor n. (n = microprocessor number)

- **80070301-1102ffff : Sensor [SensorElementName] has transitioned to non-recoverable from a less severe state. (PCI 2 Temp)**

This message is for the use case when an implementation has detected a Sensor transitioned to non-recoverable from less severe.

May also be shown as 800703011102ffff or 0x800703011102ffff

Severity
Error

Serviceable
Yes

Automatically notify support
No

Alert Category
Critical - Temperature

SNMP Trap ID
0

CIM Information
Prefix: PLAT **ID:** 0524

User Response

1. Make sure that the fans are operating, that there are no obstructions to the airflow (front and rear of the server), that the air baffle is in place and correctly installed, and that the server cover is installed and completely closed.
2. Check the ambient temperature. You must be operating within the specifications (see Server Features and specifications for more information).
3. Make sure that the heat sink for microprocessor n.
4. (Trained technician only) Replace microprocessor n. (n = microprocessor number)

- **80070301-1103ffff : Sensor [SensorElementName] has transitioned to non-recoverable from a less severe state. (PCI 3 Temp)**

This message is for the use case when an implementation has detected a Sensor transitioned to non-recoverable from less severe.

May also be shown as 800703011103ffff or 0x800703011103ffff

Severity
Error

Serviceable
Yes

Automatically notify support
No

Alert Category
Critical - Temperature

SNMP Trap ID
0

CIM Information
Prefix: PLAT **ID:** 0524

User Response

1. Make sure that the fans are operating, that there are no obstructions to the airflow (front and rear of the server), that the air baffle is in place and correctly installed, and that the server cover is installed and completely closed.
2. Check the ambient temperature. You must be operating within the specifications (see Server Features and specifications for more information).
3. Make sure that the heat sink for microprocessor n.
4. (Trained technician only) Replace microprocessor n. (n = microprocessor number)

- **80070301-2c01ffff : Sensor [SensorElementName] has transitioned to non-recoverable from a less severe state. (ML2 OverTemp)**

This message is for the use case when an implementation has detected a Sensor transitioned to non-recoverable from less severe.

May also be shown as 800703012c01ffff or 0x800703012c01ffff

Severity
Error

Serviceable
Yes

Automatically notify support
No

Alert Category
Critical - Temperature

SNMP Trap ID
0

CIM Information
Prefix: PLAT **ID:** 0524

User Response

1. Make sure that the fans are operating, that there are no obstructions to the airflow (front and rear of the server), that the air baffle is in place and correctly installed, and that the server cover is installed and completely closed.
2. Check the ambient temperature. You must be operating within the specifications (see Server Features and specifications for more information).
3. Make sure that the heat sink for microprocessor n.
4. (Trained technician only) Replace microprocessor n. (n = microprocessor number)

- **8007030d-2582ffff : Sensor [SensorElementName] has transitioned to non-recoverable from a less severe state. (RAID Vol State)**

  This message is for the use case when an implementation has detected a Sensor transitioned to non-recoverable from less severe.

  May also be shown as 8007030d2582ffff or 0x8007030d2582ffff

  Severity
  Error

  Serviceable
  Yes

  Automatically notify support
  No

  Alert Category
  Critical - Other

  SNMP Trap ID
  50

  CIM Information
  Prefix: PLAT **ID:** 0524

  User Response
  None

- **80070608-0a01ffff : Sensor [SensorElementName] has transitioned to non-recoverable. (PS1 12V OC Fault)**

  This message is for the use case when an implementation has detected a Sensor transitioned to non-recoverable.

  May also be shown as 800706080a01ffff or 0x800706080a01ffff

  Severity
  Error

  Serviceable
  Yes

  Automatically notify support
  No

  Alert Category
  Critical - Power

  SNMP Trap ID
  4

  CIM Information
  Prefix: PLAT **ID:** 0530

User Response

If the specified sensor is PS n 12V OC Fault, complete the following steps until the problem is solved:

1. Use the Lenovo Power Configurator utility to determine current system power consumption. For more information and to download the utility, go to https://www.ibm.com/support/entry/myportal/docdisplay?lndocid=LNVO-PWRCONF.
2. Follow actions in "Power Problems and Solving Power Problems".

If the specified sensor is PS n 12V OV Fault, complete the following steps until the problem is solved:

1. Check power supply n LED.
2. Remove the failing power supply.
3. (Trained technician only) Replace the system board. (n = power supply number)

If the specified sensor is PS n 12V UV Fault, complete the following steps until the problem is solved:

1. Check power supply n LED.
2. Remove the failing power supply.
3. Follow actions in "Power Problems and Solving Power Problems".
4. (Trained technician only) Replace the system board. (n = power supply number)

If the specified sensor is PS n 12Vaux Fault, complete the following steps until the problem is solved:

1. Check power supply n LED.
2. Replace power supply n. (n = power supply number)

PS1 12V OV Fault : PS1 12V UV Fault : PS1 12Vaux Fault :

- **80070608-0a02ffff : Sensor [SensorElementName] has transitioned to non-recoverable. (PS2 12V OC Fault)**

This message is for the use case when an implementation has detected a Sensor transitioned to non-recoverable.

May also be shown as 800706080a02ffff or 0x800706080a02ffff

Severity

Error

Serviceable

Yes

Automatically notify support

No

Alert Category

Critical - Power

SNMP Trap ID

4

CIM Information

Prefix: PLAT **ID:** 0530

User Response

If the specified sensor is PS n 12V OC Fault, complete the following steps until the problem is solved:

1. Use the Lenovo Power Configurator utility to determine current system power consumption. For more information and to download the utility, go to https://www.ibm.com/support/entry/myportal/docdisplay?lndocid=LNVO-PWRCONF.
2. Follow actions in "Power Problems and Solving Power Problems".

If the specified sensor is PS n 12V OV Fault, complete the following steps until the problem is solved:

1. Check power supply n LED.
2. Remove the failing power supply.
3. (Trained technician only) Replace the system board. (n = power supply number)

If the specified sensor is PS n 12V UV Fault, complete the following steps until the problem is solved:

1. Check power supply n LED.
2. Remove the failing power supply.
3. Follow actions in "Power Problems and Solving Power Problems".
4. (Trained technician only) Replace the system board. (n = power supply number)

If the specified sensor is PS n 12Vaux Fault, complete the following steps until the problem is solved:

1. Check power supply n LED.
2. Replace power supply n. (n = power supply number)

PS2 12V OV Fault : PS2 12V UV Fault : PS2 12Vaux Fault :

- **80070614-2201ffff : Sensor [SensorElementName] has transitioned to non-recoverable. (TPM Phy Pres Set)**

  This message is for the use case when an implementation has detected a Sensor transitioned to non-recoverable.

  May also be shown as 800706142201ffff or 0x800706142201ffff

  Severity
  Error

  Serviceable
  Yes

  Automatically notify support
  No

  Alert Category
  Critical - Other

  SNMP Trap ID
  50

  CIM Information
  Prefix: PLAT **ID:** 0530

  User Response

  1. Update the server firmware (see Recovering the server firmware).
  2. If the problem persists, (trained technician only) replace the system board (see Removing the system board and Installing the system board).

- **80070625-2583ffff : Sensor [SensorElementName] has transitioned to non-recoverable. (X8 PCI 2 Config)**

  This message is for the use case when an implementation has detected a Sensor transitioned to non-recoverable.

  May also be shown as 800706252583ffff or 0x800706252583ffff

  Severity
  Error

  Serviceable

Yes

Automatically notify support
No

Alert Category
Critical - Other

SNMP Trap ID
50

CIM Information
Prefix: PLAT **ID:** 0530

User Response
None X8 PCI 3 Config :

- **8008010f-2101ffff : Device [LogicalDeviceElementName] has been added. (Phy Presence Jmp)**

  This message is for the use case when an implementation has detected a Device was inserted.

  May also be shown as 8008010f2101ffff or 0x8008010f2101ffff

  Severity
  Info

  Serviceable
  No

  Automatically notify support
  No

  Alert Category
  System - Other

  SNMP Trap ID

  CIM Information
  Prefix: PLAT **ID:** 0536

  User Response
  No action; information only.

- **80080128-2101ffff : Device [LogicalDeviceElementName] has been added. (Low Security Jmp)**

  This message is for the use case when an implementation has detected a Device was inserted.

  May also be shown as 800801282101ffff or 0x800801282101ffff

  Severity
  Info

  Serviceable
  No

  Automatically notify support
  No

  Alert Category
  System - Other

  SNMP Trap ID

CIM Information
Prefix: PLAT **ID:** 0536

User Response
No action; information only.

- **800b0008-1301ffff : Redundancy [RedundancySetElementName] has been restored. (Power Unit)**

  This message is for the use case when an implementation has detected Redundancy was Restored.

  May also be shown as 800b00081301ffff or 0x800b00081301ffff

  Severity
  Info

  Serviceable
  No

  Automatically notify support
  No

  Alert Category
  Warning - Redundant Power Supply

  SNMP Trap ID
  10

  CIM Information
  Prefix: PLAT **ID:** 0561

  User Response
  No action; information only.

- **800b0108-1301ffff : Redundancy Lost for [RedundancySetElementName] has asserted. (Power Unit)**

  This message is for the use case when Redundancy Lost has asserted.

  May also be shown as 800b01081301ffff or 0x800b01081301ffff

  Severity
  Error

  Serviceable
  Yes

  Automatically notify support
  No

  Alert Category
  Critical - Redundant Power Supply

  SNMP Trap ID
  9

  CIM Information
  Prefix: PLAT **ID:** 0802

  User Response

  1. Check the LEDs for both power supplies.
  2. Follow the actions in Power-supply LEDs.

- **800b010a-1e81ffff : Redundancy Lost for [RedundancySetElementName] has asserted. (Fan Zone 1)**

  This message is for the use case when Redundancy Lost has asserted.

  May also be shown as 800b010a1e81ffff or 0x800b010a1e81ffff

  Severity
  Error

  Serviceable
  Yes

  Automatically notify support
  No

  Alert Category
  Critical - Fan Failure

  SNMP Trap ID
  11

  CIM Information
  Prefix: PLAT **ID:** 0802

  User Response

  1. Make sure that the connectors on fan n are not damaged.
  2. Make sure that the fan n connectors on the system board are not damaged.
  3. Make sure that the fans are correctly installed.
  4. Reseat the fans.
  5. Replace the fans. (n = fan number)

- **800b010a-1e82ffff : Redundancy Lost for [RedundancySetElementName] has asserted. (Fan Zone 2)**

  This message is for the use case when Redundancy Lost has asserted.

  May also be shown as 800b010a1e82ffff or 0x800b010a1e82ffff

  Severity
  Error

  Serviceable
  Yes

  Automatically notify support
  No

  Alert Category
  Critical - Fan Failure

  SNMP Trap ID
  11

  CIM Information
  Prefix: PLAT **ID:** 0802

  User Response

  1. Make sure that the connectors on fan n are not damaged.
  2. Make sure that the fan n connectors on the system board are not damaged.

3. Make sure that the fans are correctly installed.
4. Reseat the fans.
5. Replace the fans. (n = fan number)

- **800b010c-2581ffff : Redundancy Lost for [RedundancySetElementName] has asserted. (Backup Memory)**

  This message is for the use case when Redundancy Lost has asserted.

  May also be shown as 800b010c2581ffff or 0x800b010c2581ffff

  Severity
  Error

  Serviceable
  Yes

  Automatically notify support
  No

  Alert Category
  Critical - Memory

  SNMP Trap ID
  41

  CIM Information
  Prefix: PLAT **ID:** 0802

  User Response

  1. Check the system-event log for DIMM failure events (uncorrectable or PFA) and correct the failures.
  2. Re-enable mirroring in the Setup utility.

- **800b0309-1301ffff : Non-redundant:Sufficient Resources from Redundancy Degraded or Fully Redundant for [RedundancySetElementName] has asserted. (Power Resource)**

  This message is for the use case when a Redundancy Set has transitioned from Redundancy Degraded or Fully Redundant to Non-redundant:Sufficient.

  May also be shown as 800b03091301ffff or 0x800b03091301ffff

  Severity
  Warning

  Serviceable
  Yes

  Automatically notify support
  No

  Alert Category
  Warning - Redundant Power Supply

  SNMP Trap ID
  10

  CIM Information
  Prefix: PLAT **ID:** 0806

  User Response

1. Non-redundant sufficient: Power load will be handled by remaining power supply, though the system may throttle to avoid a power supply over-current condition.
2. Replace the power supply with higher rated power.

- **800b030c-2581ffff : Non-redundant:Sufficient Resources from Redundancy Degraded or Fully Redundant for [RedundancySetElementName] has asserted. (Backup Memory)**

  This message is for the use case when a Redundancy Set has transitioned from Redundancy Degraded or Fully Redundant to Non-redundant:Sufficient.

  May also be shown as 800b030c2581ffff or 0x800b030c2581ffff

  Severity
  Warning

  Serviceable
  Yes

  Automatically notify support
  No

  Alert Category
  Warning - Memory

  SNMP Trap ID
  43

  CIM Information
  Prefix: PLAT **ID:** 0806

  User Response

  1. Check the system-event log for DIMM failure events (uncorrectable or PFA) and correct the failures.
  2. Re-enable mirroring in the Setup utility.

- **800b0509-1301ffff : Non-redundant:Insufficient Resources for [RedundancySetElementName] has asserted. (Power Resource)**

  This message is for the use case when a Redundancy Set has transitioned to Non-redundant:Insufficient Resources.

  May also be shown as 800b05091301ffff or 0x800b05091301ffff

  Severity
  Error

  Serviceable
  Yes

  Automatically notify support
  No

  Alert Category
  Critical - Redundant Power Supply

  SNMP Trap ID
  9

  CIM Information
  Prefix: PLAT **ID:** 0810

  User Response

1. Power load may be handled by remaining power supply. The system will attempt to throttle to avoid a power supply over-current condition. But a system shutdown may happen anyway if the power load is too great.
2. Reduce the total power consumption by removing newly added or unused options like drives or adaptors.
3. Use the Lenovo Power Configurator utility to determine current system power consumption. For more information and to download the utility, go to https://www.ibm.com/support/entry/myportal/docdisplay?lndocid=LNVO-PWRCONF.
4. Replace the power supply with higher rated power.

- **800b050a-1e81ffff : Non-redundant:Insufficient Resources for [RedundancySetElementName] has asserted. (Fan Zone 1)**

  This message is for the use case when a Redundancy Set has transitioned to Non-redundant:Insufficient Resources.

  May also be shown as 800b050a1e81ffff or 0x800b050a1e81ffff

  Severity
  Error

  Serviceable
  Yes

  Automatically notify support
  No

  Alert Category
  Critical - Fan Failure

  SNMP Trap ID
  11

  CIM Information
  Prefix: PLAT **ID:** 0810

  User Response

  1. Make sure that the connectors on fan n are not damaged.
  2. Make sure that the fan n connectors on the system board are not damaged.
  3. Make sure that the fans are correctly installed.
  4. Reseat the fans.
  5. Replace the fans. (n = fan number)

- **800b050a-1e82ffff : Non-redundant:Insufficient Resources for [RedundancySetElementName] has asserted. (Fan Zone 2)**

  This message is for the use case when a Redundancy Set has transitioned to Non-redundant:Insufficient Resources.

  May also be shown as 800b050a1e82ffff or 0x800b050a1e82ffff

  Severity
  Error

  Serviceable
  Yes

  Automatically notify support

No

Alert Category
Critical - Fan Failure

SNMP Trap ID
11

CIM Information
Prefix: PLAT **ID:** 0810

User Response

1. Make sure that the connectors on fan n are not damaged.
2. Make sure that the fan n connectors on the system board are not damaged.
3. Make sure that the fans are correctly installed.
4. Reseat the fans.
5. Replace the fans. (n = fan number)

- **800b050c-2581ffff : Non-redundant:Insufficient Resources for [RedundancySetElementName] has asserted. (Backup Memory)**

This message is for the use case when a Redundancy Set has transitioned to Non-redundant:Insufficient Resources.

May also be shown as 800b050c2581ffff or 0x800b050c2581ffff

Severity
Error

Serviceable
Yes

Automatically notify support
No

Alert Category
Critical - Memory

SNMP Trap ID
41

CIM Information
Prefix: PLAT **ID:** 0810

User Response

1. Check the system-event log for DIMM failure events (uncorrectable or PFA) and correct the failures.
2. Re-enable mirroring in the Setup utility.

- **806f0007-0301ffff : [ProcessorElementName] has Failed with IERR. (CPU 1)**

This message is for the use case when an implementation has detected a Processor Failed - IERR Condition.

May also be shown as 806f00070301ffff or 0x806f00070301ffff

Severity
Error

Serviceable

Yes

Automatically notify support
No

Alert Category
Critical - CPU

SNMP Trap ID
40

CIM Information
Prefix: PLAT **ID:** 0042

User Response

1. Make sure that the latest level of firmware and device drivers are installed for all adapters and standard devices, such as Ethernet, SCSI, and SAS. Important: Some cluster solutions require specific code levels or coordinated code updates. If the device is part of a cluster solution, verify that the latest level of code is supported for the cluster solution before you update the code.
2. Update the firmware (UEFI and IMM) to the latest level (Updating the firmware).
3. Run the DSA program.
4. Reseat the adapter.
5. Replace the adapter.
6. (Trained technician only) Replace microprocessor n.
7. (Trained technician only) Replace the system board. (n = microprocessor number)

- **806f0007-0302ffff : [ProcessorElementName] has Failed with IERR. (CPU 2)**

This message is for the use case when an implementation has detected a Processor Failed - IERR Condition.

May also be shown as 806f00070302ffff or 0x806f00070302ffff

Severity
Error

Serviceable
Yes

Automatically notify support
No

Alert Category
Critical - CPU

SNMP Trap ID
40

CIM Information
Prefix: PLAT **ID:** 0042

User Response

1. Make sure that the latest level of firmware and device drivers are installed for all adapters and standard devices, such as Ethernet, SCSI, and SAS. Important: Some cluster solutions require specific code levels or coordinated code updates. If the device is part of a cluster solution, verify that the latest level of code is supported for the cluster solution before you update the code.
2. Update the firmware (UEFI and IMM) to the latest level (Updating the firmware).
3. Run the DSA program.

4. Reseat the adapter.
5. Replace the adapter.
6. (Trained technician only) Replace microprocessor n.
7. (Trained technician only) Replace the system board. (n = microprocessor number)

- **806f0008-0a01ffff : [PowerSupplyElementName] has been added to container [PhysicalPackageElementName]. (Power Supply 1)**

  This message is for the use case when an implementation has detected a Power Supply has been added.

  May also be shown as 806f00080a01ffff or 0x806f00080a01ffff

  Severity
  Info

  Serviceable
  No

  Automatically notify support
  No

  Alert Category
  System - Other

  SNMP Trap ID

  CIM Information
  Prefix: PLAT **ID:** 0084

  User Response
  No action; information only.

- **806f0008-0a02ffff : [PowerSupplyElementName] has been added to container [PhysicalPackageElementName]. (Power Supply 2)**

  This message is for the use case when an implementation has detected a Power Supply has been added.

  May also be shown as 806f00080a02ffff or 0x806f00080a02ffff

  Severity
  Info

  Serviceable
  No

  Automatically notify support
  No

  Alert Category
  System - Other

  SNMP Trap ID

  CIM Information
  Prefix: PLAT **ID:** 0084

  User Response
  No action; information only.

- **806f0009-1301ffff : [PowerSupplyElementName] has been turned off. (Host Power)**

This message is for the use case when an implementation has detected a Power Unit that has been Disabled.

May also be shown as 806f00091301ffff or 0x806f00091301ffff

Severity
Info

Serviceable
No

Automatically notify support
No

Alert Category
System - Power Off

SNMP Trap ID
23

CIM Information
Prefix: PLAT **ID:** 0106

User Response
No action; information only.

- **806f000d-0400ffff : The Drive [StorageVolumeElementName] has been added. (Drive 0)**

This message is for the use case when an implementation has detected a Drive has been Added.

May also be shown as 806f000d0400ffff or 0x806f000d0400ffff

Severity
Info

Serviceable
No

Automatically notify support
No

Alert Category
System - Other

SNMP Trap ID
22

CIM Information
Prefix: PLAT **ID:** 0162

User Response
No action; information only.

- **806f000d-0401ffff : The Drive [StorageVolumeElementName] has been added. (Drive 1)**

This message is for the use case when an implementation has detected a Drive has been Added.

May also be shown as 806f000d0401ffff or 0x806f000d0401ffff

Severity
Info

Serviceable
No

Automatically notify support
No

Alert Category
System - Other

SNMP Trap ID
22

CIM Information
Prefix: PLAT **ID:** 0162

User Response
No action; information only.

- **806f000d-0402ffff : The Drive [StorageVolumeElementName] has been added. (Drive 2)**

  This message is for the use case when an implementation has detected a Drive has been Added.

  May also be shown as 806f000d0402ffff or 0x806f000d0402ffff

  Severity
  Info

  Serviceable
  No

  Automatically notify support
  No

  Alert Category
  System - Other

  SNMP Trap ID
  22

  CIM Information
  Prefix: PLAT **ID:** 0162

  User Response
  No action; information only.

- **806f000d-0403ffff : The Drive [StorageVolumeElementName] has been added. (Drive 3)**

  This message is for the use case when an implementation has detected a Drive has been Added.

  May also be shown as 806f000d0403ffff or 0x806f000d0403ffff

  Severity
  Info

  Serviceable
  No

  Automatically notify support
  No

  Alert Category
  System - Other

  SNMP Trap ID
  22

  CIM Information
  Prefix: PLAT **ID:** 0162

User Response
No action; information only.

- **806f000d-0404ffff : The Drive [StorageVolumeElementName] has been added. (Drive 4)**

  This message is for the use case when an implementation has detected a Drive has been Added.

  May also be shown as 806f000d0404ffff or 0x806f000d0404ffff

  Severity
  Info

  Serviceable
  No

  Automatically notify support
  No

  Alert Category
  System - Other

  SNMP Trap ID
  22

  CIM Information
  Prefix: PLAT **ID:** 0162

  User Response
  No action; information only.

- **806f000d-0405ffff : The Drive [StorageVolumeElementName] has been added. (Drive 5)**

  This message is for the use case when an implementation has detected a Drive has been Added.

  May also be shown as 806f000d0405ffff or 0x806f000d0405ffff

  Severity
  Info

  Serviceable
  No

  Automatically notify support
  No

  Alert Category
  System - Other

  SNMP Trap ID
  22

  CIM Information
  Prefix: PLAT **ID:** 0162

  User Response
  No action; information only.

- **806f000d-0406ffff : The Drive [StorageVolumeElementName] has been added. (Drive 6)**

  This message is for the use case when an implementation has detected a Drive has been Added.

  May also be shown as 806f000d0406ffff or 0x806f000d0406ffff

  Severity

Info

Serviceable
No

Automatically notify support
No

Alert Category
System - Other

SNMP Trap ID
22

CIM Information
Prefix: PLAT **ID:** 0162

User Response
No action; information only.

- **806f000d-0407ffff : The Drive [StorageVolumeElementName] has been added. (Drive 7)**

  This message is for the use case when an implementation has detected a Drive has been Added.

  May also be shown as 806f000d0407ffff or 0x806f000d0407ffff

  Severity
  Info

  Serviceable
  No

  Automatically notify support
  No

  Alert Category
  System - Other

  SNMP Trap ID
  22

  CIM Information
  Prefix: PLAT **ID:** 0162

  User Response
  No action; information only.

- **806f000d-0408ffff : The Drive [StorageVolumeElementName] has been added. (Drive 8)**

  This message is for the use case when an implementation has detected a Drive has been Added.

  May also be shown as 806f000d0408ffff or 0x806f000d0408ffff

  Severity
  Info

  Serviceable
  No

  Automatically notify support
  No

  Alert Category
  System - Other

SNMP Trap ID
22

CIM Information
Prefix: PLAT **ID:** 0162

User Response
No action; information only.

- **806f000d-0409ffff : The Drive [StorageVolumeElementName] has been added. (Drive 9)**

  This message is for the use case when an implementation has detected a Drive has been Added.

  May also be shown as 806f000d0409ffff or 0x806f000d0409ffff

  Severity
  Info

  Serviceable
  No

  Automatically notify support
  No

  Alert Category
  System - Other

  SNMP Trap ID
  22

  CIM Information
  Prefix: PLAT **ID:** 0162

  User Response
  No action; information only.

- **806f000d-040affff : The Drive [StorageVolumeElementName] has been added. (Drive 10)**

  This message is for the use case when an implementation has detected a Drive has been Added.

  May also be shown as 806f000d040affff or 0x806f000d040affff

  Severity
  Info

  Serviceable
  No

  Automatically notify support
  No

  Alert Category
  System - Other

  SNMP Trap ID
  22

  CIM Information
  Prefix: PLAT **ID:** 0162

  User Response
  No action; information only.

- **806f000d-040bffff : The Drive [StorageVolumeElementName] has been added. (Drive 11)**

This message is for the use case when an implementation has detected a Drive has been Added.

May also be shown as 806f000d040bffff or 0x806f000d040bffff

Severity
Info

Serviceable
No

Automatically notify support
No

Alert Category
System - Other

SNMP Trap ID
22

CIM Information
Prefix: PLAT **ID:** 0162

User Response
No action; information only.

- **806f000d-040cffff : The Drive [StorageVolumeElementName] has been added. (Drive 12)**

This message is for the use case when an implementation has detected a Drive has been Added.

May also be shown as 806f000d040cffff or 0x806f000d040cffff

Severity
Info

Serviceable
No

Automatically notify support
No

Alert Category
System - Other

SNMP Trap ID
22

CIM Information
Prefix: PLAT **ID:** 0162

User Response
No action; information only.

- **806f000d-040dffff : The Drive [StorageVolumeElementName] has been added. (Drive 13)**

This message is for the use case when an implementation has detected a Drive has been Added.

May also be shown as 806f000d040dffff or 0x806f000d040dffff

Severity
Info

Serviceable
No

Automatically notify support
No

Alert Category
System - Other

SNMP Trap ID
22

CIM Information
Prefix: PLAT **ID:** 0162

User Response
No action; information only.

- **806f000d-0410ffff : The Drive [StorageVolumeElementName] has been added. (Ext Drive)**

  This message is for the use case when an implementation has detected a Drive has been Added.

  May also be shown as 806f000d0410ffff or 0x806f000d0410ffff

  Severity
  Info

  Serviceable
  No

  Automatically notify support
  No

  Alert Category
  System - Other

  SNMP Trap ID
  22

  CIM Information
  Prefix: PLAT **ID:** 0162

  User Response
  No action; information only.

- **806f000f-220101ff : The System [ComputerSystemElementName] has detected no memory in the system. (ABR Status)**

  This message is for the use case when an implementation has detected that memory was detected in the system.

  May also be shown as 806f000f220101ff or 0x806f000f220101ff

  Severity
  Error

  Serviceable
  Yes

  Automatically notify support
  No

  Alert Category
  Critical - Memory

  SNMP Trap ID
  41

CIM Information
Prefix: PLAT **ID:** 0794

User Response

1. Make sure the server meets the minimum configuration to start (see Power-supply LEDs).
2. Recover the server firmware from the backup page: a. Restart the server. b. At the prompt, press F3 to recover the firmware.
3. Update the server firmware on the primary page. Important: Some cluster solutions require specific code levels or coordinated code updates. If the device is part of a cluster solution, verify that the latest level of code is supported for the cluster solution before you update the code.
4. Remove components one at a time, restarting the server each time, to see if the problem goes away.
5. If the problem remains, (trained technician only) replace the system board.

Firmware Error : Sys Boot Status : X8 PCI 2 Firm : X8 PCI 3 Firm :

- **806f000f-220102ff : Subsystem [MemoryElementName] has insufficient memory for operation. (ABR Status)**

This message is for the use case when an implementation has detected that the usable Memory is insufficient for operation.

May also be shown as 806f000f220102ff or 0x806f000f220102ff

Severity
Error

Serviceable
Yes

Automatically notify support
No

Alert Category
Critical - Memory

SNMP Trap ID
41

CIM Information
Prefix: PLAT **ID:** 0132

User Response

1. Make sure the server meets the minimum configuration to start (see Power-supply LEDs).
2. Update the server firmware on the primary page. Important: Some cluster solutions require specific code levels or coordinated code updates. If the device is part of a cluster solution, verify that the latest level of code is supported for the cluster solution before you update the code.
3. (Trained technician only) Replace the system board.

Firmware Error : Sys Boot Status : X8 PCI 2 Firm : X8 PCI 3 Firm :

- **806f000f-220103ff : The System [ComputerSystemElementName] encountered firmware error - unrecoverable boot device failure. (ABR Status)**

This message is for the use case when an implementation has detected that System Firmware Error Unrecoverable boot device failure has occurred.

May also be shown as 806f000f220103ff or 0x806f000f220103ff

Severity
Error

Serviceable
Yes

Automatically notify support
No

Alert Category
Critical - Hard Disk drive

SNMP Trap ID
5

CIM Information
Prefix: PLAT **ID:** 0770

User Response
This is a UEFI detected event. The UEFI(POST) error code for this event can be found in the logged IMM message text. Please refer to the UEFI(POST) error code in the "UEFI(POST) error code" section of the Information Center for the appropriate user response. Firmware Error : Sys Boot Status : X8 PCI 2 Firm : X8 PCI 3 Firm :

- **806f000f-220104ff : The System [ComputerSystemElementName]has encountered a motherboard failure. (ABR Status)**

  This message is for the use case when an implementation has detected that a fatal motherboard failure in the system.

  May also be shown as 806f000f220104ff or 0x806f000f220104ff

  Severity
  Error

  Serviceable
  Yes

  Automatically notify support
  No

  Alert Category
  Critical - Other

  SNMP Trap ID
  50

  CIM Information
  Prefix: PLAT **ID:** 0795

  User Response
  This is a UEFI detected event. The UEFI(POST) error code for this event can be found in the logged IMM message text. Please refer to the UEFI(POST) error code in the "UEFI(POST) error code" section of the Information Center for the appropriate user response. Firmware Error : Sys Boot Status : X8 PCI 2 Firm : X8 PCI 3 Firm :

- **806f000f-220107ff : The System [ComputerSystemElementName] encountered firmware error - unrecoverable keyboard failure. (ABR Status)**

  This message is for the use case when an implementation has detected that System Firmware Error Unrecoverable Keyboard failure has occurred.

  May also be shown as 806f000f220107ff or 0x806f000f220107ff

Severity
Error

Serviceable
Yes

Automatically notify support
No

Alert Category
Critical - Other

SNMP Trap ID
50

CIM Information
Prefix: PLAT **ID:** 0764

User Response
This is a UEFI detected event. The UEFI(POST) error code for this event can be found in the logged IMM message text. Please refer to the UEFI(POST) error code in the "UEFI(POST) error code" section of the Information Center for the appropriate user response. Firmware Error : Sys Boot Status : X8 PCI 2 Firm : X8 PCI 3 Firm :

- **806f000f-22010aff : The System [ComputerSystemElementName] encountered firmware error - no video device detected. (ABR Status)**

This message is for the use case when an implementation has detected that System Firmware Error No video device detected has occurred.

May also be shown as 806f000f22010aff or 0x806f000f22010aff

Severity
Error

Serviceable
Yes

Automatically notify support
No

Alert Category
Critical - Other

SNMP Trap ID
50

CIM Information
Prefix: PLAT **ID:** 0766

User Response
This is a UEFI detected event. The UEFI(POST) error code for this event can be found in the logged IMM message text. Please refer to the UEFI(POST) error code in the "UEFI(POST) error code" section of the Information Center for the appropriate user response. Firmware Error : Sys Boot Status : X8 PCI 2 Firm : X8 PCI 3 Firm :

- **806f000f-22010bff : Firmware BIOS (ROM) corruption was detected on system [ComputerSystemElementName] during POST. (ABR Status)**

Firmware BIOS (ROM) corruption was detected on the system during POST.

May also be shown as 806f000f22010bff or 0x806f000f22010bff

Severity
Error

Serviceable
Yes

Automatically notify support
No

Alert Category
Critical - Other

SNMP Trap ID
50

CIM Information
Prefix: PLAT **ID:** 0850

User Response

1. Make sure the server meets the minimum configuration to start (see Power-supply LEDs).
2. Recover the server firmware from the backup page: a.Restart the server. b.At the prompt, press F3 to recover the firmware.
3. Update the server firmware to the latest level (see Updating the firmware). Important: Some cluster solutions require specific code levels or coordinated code updates. If the device is part of a cluster solution, verify that the latest level of code is supported for the cluster solution before you update the code.
4. Remove components one at a time, restarting the server each time, to see if the problem goes away.
5. If the problem remains, (trained service technician) replace the system board.

Firmware Error : Sys Boot Status : X8 PCI 2 Firm : X8 PCI 3 Firm :

- **806f000f-22010cff : CPU voltage mismatch detected on [ProcessorElementName]. (ABR Status)**

This message is for the use case when an implementation has detected a CPU voltage mismatch with the socket voltage.

May also be shown as 806f000f22010cff or 0x806f000f22010cff

Severity
Error

Serviceable
Yes

Automatically notify support
No

Alert Category
Critical - CPU

SNMP Trap ID
40

CIM Information
Prefix: PLAT **ID:** 0050

User Response
This is a UEFI detected event. The UEFI(POST) error code for this event can be found in the logged IMM message text. Please refer to the UEFI(POST) error code in the "UEFI(POST) error code" section

of the Info Center for the appropriate user response. Firmware Error : Sys Boot Status : X8 PCI 2 Firm : X8 PCI 3 Firm :

- **806f000f-2201ffff : The System [ComputerSystemElementName] encountered a POST Error. (ABR Status)**

  This message is for the use case when an implementation has detected a Post Error.

  May also be shown as 806f000f2201ffff or 0x806f000f2201ffff

  Severity
  Error

  Serviceable
  Yes

  Automatically notify support
  No

  Alert Category
  Critical - Other

  SNMP Trap ID
  50

  CIM Information
  Prefix: PLAT **ID:** 0184

  User Response
  This is a UEFI detected event. The UEFI(POST) error code for this event can be found in the logged IMM message text. Please refer to the UEFI(POST) error code in the "UEFI(POST) error code" section of the Information Center for the appropriate user response. Firmware Error : Sys Boot Status : X8 PCI 2 Firm : X8 PCI 3 Firm :

- **806f0013-1701ffff : A diagnostic interrupt has occurred on system [ComputerSystemElementName]. (NMI State)**

  This message is for the use case when an implementation has detected a Front Panel NMI / Diagnostic Interrupt.

  May also be shown as 806f00131701ffff or 0x806f00131701ffff

  Severity
  Error

  Serviceable
  Yes

  Automatically notify support
  No

  Alert Category
  Critical - Other

  SNMP Trap ID
  50

  CIM Information
  Prefix: PLAT **ID:** 0222

  User Response
  If the NMI button has not been pressed, complete the following steps:

  1. Make sure that the NMI button is not pressed.

2. Replace the operator information panel cable.
3. Replace the operator information panel.

- **806f001e-2201ffff : No bootable media available for system [ComputerSystemElementName]. (No Boot Device)**

  This message is for the use case when an implementation has detected a System with No Bootable Media.

  May also be shown as 806f001e2201ffff or 0x806f001e2201ffff

  Severity
  Info

  Serviceable
  No

  Automatically notify support
  No

  Alert Category
  System - Other

  SNMP Trap ID

  CIM Information
  Prefix: PLAT **ID:** 0286

  User Response
  No action; information only.

- **806f0021-2201ffff : Fault in slot [PhysicalConnectorSystemElementName] on system [ComputerSystemElementName]. (No Op ROM Space)**

  This message is for the use case when an implementation has detected a Fault in a slot.

  May also be shown as 806f00212201ffff or 0x806f00212201ffff

  Severity
  Error

  Serviceable
  Yes

  Automatically notify support
  Yes

  Alert Category
  Critical - Other

  SNMP Trap ID
  50

  CIM Information
  Prefix: PLAT **ID:** 0330

  User Response

  1. Check the PCI LED.
  2. Reseat the affected adapters and riser card.
  3. Update the server firmware (UEFI and IMM) and adapter firmware. Important: Some cluster solutions require specific code levels or coordinated code updates. If the device is part of a

cluster solution, verify that the latest level of code is supported for the cluster solution before you update the code.

4. Replace the affected adapters.
5. Replace the riser card.
6. (Trained service technicians only) Replace the system board.

- **806f0021-2582ffff : Fault in slot [PhysicalConnectorSystemElementName] on system [ComputerSystemElementName]. (All PCI Error)**

  This message is for the use case when an implementation has detected a Fault in a slot.

  May also be shown as 806f00212582ffff or 0x806f00212582ffff

  Severity
  Error

  Serviceable
  Yes

  Automatically notify support
  Yes

  Alert Category
  Critical - Other

  SNMP Trap ID
  50

  CIM Information
  Prefix: PLAT **ID:** 0330

  User Response

  1. Check the PCI LED.
  2. Reseat the affected adapters and riser card.
  3. Update the server firmware (UEFI and IMM) and adapter firmware. Important: Some cluster solutions require specific code levels or coordinated code updates. If the device is part of a cluster solution, verify that the latest level of code is supported for the cluster solution before you update the code.
  4. Replace the affected adapters.
  5. Replace the riser card.
  6. (Trained service technicians only) Replace the system board.

  One of PCI Errors :

- **806f0021-2c01ffff : Fault in slot [PhysicalConnectorSystemElementName] on system [ComputerSystemElementName]. (ML2 Card Fault)**

  This message is for the use case when an implementation has detected a Fault in a slot.

  May also be shown as 806f00212c01ffff or 0x806f00212c01ffff

  Severity
  Error

  Serviceable
  Yes

  Automatically notify support
  Yes

Alert Category
Critical - Other

SNMP Trap ID
50

CIM Information
Prefix: PLAT **ID:** 0330

User Response

1. Check the PCI LED.
2. Reseat the affected adapters and riser card.
3. Update the server firmware (UEFI and IMM) and adapter firmware. Important: Some cluster solutions require specific code levels or coordinated code updates. If the device is part of a cluster solution, verify that the latest level of code is supported for the cluster solution before you update the code.
4. Replace the affected adapters.
5. Replace the riser card.
6. (Trained service technicians only) Replace the system board.

- **806f0021-3001ffff : Fault in slot [PhysicalConnectorSystemElementName] on system [ComputerSystemElementName]. (Internal RAID)**

This message is for the use case when an implementation has detected a Fault in a slot.

May also be shown as 806f00213001ffff or 0x806f00213001ffff

Severity
Error

Serviceable
Yes

Automatically notify support
Yes

Alert Category
Critical - Other

SNMP Trap ID
50

CIM Information
Prefix: PLAT **ID:** 0330

User Response

1. Check the PCI LED.
2. Reseat the affected adapters and riser card.
3. Update the server firmware (UEFI and IMM) and adapter firmware. Important: Some cluster solutions require specific code levels or coordinated code updates. If the device is part of a cluster solution, verify that the latest level of code is supported for the cluster solution before you update the code.
4. Replace the affected adapters.
5. Replace the riser card.
6. (Trained service technicians only) Replace the system board.

PCI 1 :

- **806f0021-3002ffff : Fault in slot [PhysicalConnectorSystemElementName] on system [ComputerSystemElementName]. (PCI 2)**

  This message is for the use case when an implementation has detected a Fault in a slot.

  May also be shown as 806f00213002ffff or 0x806f00213002ffff

  Severity
  Error

  Serviceable
  Yes

  Automatically notify support
  Yes

  Alert Category
  Critical - Other

  SNMP Trap ID
  50

  CIM Information
  Prefix: PLAT **ID:** 0330

  User Response

  1. Check the PCI LED.
  2. Reseat the affected adapters and riser card.
  3. Update the server firmware (UEFI and IMM) and adapter firmware. Important: Some cluster solutions require specific code levels or coordinated code updates. If the device is part of a cluster solution, verify that the latest level of code is supported for the cluster solution before you update the code.
  4. Replace the affected adapters.
  5. Replace the riser card.
  6. (Trained service technicians only) Replace the system board.

- **806f0021-3003ffff : Fault in slot [PhysicalConnectorSystemElementName] on system [ComputerSystemElementName]. (PCI 3)**

  This message is for the use case when an implementation has detected a Fault in a slot.

  May also be shown as 806f00213003ffff or 0x806f00213003ffff

  Severity
  Error

  Serviceable
  Yes

  Automatically notify support
  Yes

  Alert Category
  Critical - Other

  SNMP Trap ID
  50

  CIM Information
  Prefix: PLAT **ID:** 0330

User Response

1. Check the PCI LED.
2. Reseat the affected adapters and riser card.
3. Update the server firmware (UEFI and IMM) and adapter firmware. Important: Some cluster solutions require specific code levels or coordinated code updates. If the device is part of a cluster solution, verify that the latest level of code is supported for the cluster solution before you update the code.
4. Replace the affected adapters.
5. Replace the riser card.
6. (Trained service technicians only) Replace the system board.

- **806f0023-2101ffff : Watchdog Timer expired for [WatchdogElementName]. (IPMI Watchdog)**

  This message is for the use case when an implementation has detected a Watchdog Timer Expired.

  May also be shown as 806f00232101ffff or 0x806f00232101ffff

  Severity
  Info

  Serviceable
  No

  Automatically notify support
  No

  Alert Category
  System - Other

  SNMP Trap ID

  CIM Information
  Prefix: PLAT **ID:** 0368

  User Response
  No action; information only.

- **806f0028-2101ffff : Sensor [SensorElementName] is unavailable or degraded on management system [ComputerSystemElementName]. (TPM Cmd Failures)**

  This message is for the use case when an implementation has detected a Sensor is Unavailable or degraded.

  May also be shown as 806f00282101ffff or 0x806f00282101ffff

  Severity
  Warning

  Serviceable
  Yes

  Automatically notify support
  No

  Alert Category
  Warning - Other

  SNMP Trap ID
  60

CIM Information
Prefix: PLAT **ID:** 0398

User Response

1. Turn off the server and disconnect the power cords. Reconnect the power cords and restart the server.
2. If the problem remains, (trained technician only) replace the system board.

- **806f0107-0301ffff : An Over-Temperature Condition has been detected on [ProcessorElementName]. (CPU 1)**

This message is for the use case when an implementation has detected an Over-Temperature Condition Detected for Processor.

May also be shown as 806f01070301ffff or 0x806f01070301ffff

Severity
Error

Serviceable
Yes

Automatically notify support
No

Alert Category
Critical - Temperature

SNMP Trap ID
0

CIM Information
Prefix: PLAT **ID:** 0036

User Response

1. Make sure that the fans are operating. There are no obstructions to the airflow (front and rear of the server), the air baffles are in place and correctly installed, and the server cover is installed and completely closed.
2. Make sure that the heat sink for microprocessor n is installed correctly.
3. (Trained technician only) Replace microprocessor n. (n = microprocessor number)

- **806f0107-0302ffff : An Over-Temperature Condition has been detected on [ProcessorElementName]. (CPU 2)**

This message is for the use case when an implementation has detected an Over-Temperature Condition Detected for Processor.

May also be shown as 806f01070302ffff or 0x806f01070302ffff

Severity
Error

Serviceable
Yes

Automatically notify support
No

Alert Category
Critical - Temperature

SNMP Trap ID
0

CIM Information
Prefix: PLAT **ID:** 0036

User Response

1. Make sure that the fans are operating. There are no obstructions to the airflow (front and rear of the server), the air baffles are in place and correctly installed, and the server cover is installed and completely closed.
2. Make sure that the heat sink for microprocessor n is installed correctly.
3. (Trained technician only) Replace microprocessor n. (n = microprocessor number)

- **806f0108-0a01ffff : [PowerSupplyElementName] has Failed. (Power Supply 1)**

This message is for the use case when an implementation has detected a Power Supply has failed.

May also be shown as 806f01080a01ffff or 0x806f01080a01ffff

Severity
Error

Serviceable
Yes

Automatically notify support
Yes

Alert Category
Critical - Power

SNMP Trap ID
4

CIM Information
Prefix: PLAT **ID:** 0086

User Response

1. Reseat power supply n.
2. If the power-on LED is not lit and the power-supply error LED is lit, replace power supply n.
3. If both the power-on LED and the power-supply error LED are not lit, see Power problems for more information. (n = power supply number)

- **806f0108-0a02ffff : [PowerSupplyElementName] has Failed. (Power Supply 2)**

This message is for the use case when an implementation has detected a Power Supply has failed.

May also be shown as 806f01080a02ffff or 0x806f01080a02ffff

Severity
Error

Serviceable
Yes

Automatically notify support
Yes

Alert Category
Critical - Power

SNMP Trap ID
4

CIM Information
Prefix: PLAT **ID:** 0086

User Response

1. Reseat power supply n.
2. If the power-on LED is not lit and the power-supply error LED is lit, replace power supply n.
3. If both the power-on LED and the power-supply error LED are not lit, see Power problems for more information. (n = power supply number)

- **806f0109-1301ffff : [PowerSupplyElementName] has been Power Cycled. (Host Power)**

This message is for the use case when an implementation has detected a Power Unit that has been power cycled.

May also be shown as 806f01091301ffff or 0x806f01091301ffff

Severity
Info

Serviceable
No

Automatically notify support
No

Alert Category
System - Other

SNMP Trap ID

CIM Information
Prefix: PLAT **ID:** 0108

User Response
No action; information only.

- **806f010c-2001ffff : Uncorrectable error detected for [PhysicalMemoryElementName] on Subsystem [MemoryElementName]. (DIMM 1)**

This message is for the use case when an implementation has detected a Memory uncorrectable error.

May also be shown as 806f010c2001ffff or 0x806f010c2001ffff

Severity
Error

Serviceable
Yes

Automatically notify support
Yes

Alert Category
Critical - Memory

SNMP Trap ID
41

CIM Information

Prefix: PLAT **ID:** 0138

User Response

Note: Each time you install or remove a DIMM, you must disconnect the server from the power source; then, wait 10 seconds before restarting the server.

1. Refer to TIP H212293 for minimum code level.
2. Check the Lenovo support website for an applicable retain tip or firmware update that applies to this memory error.
3. Swap the affected DIMMs (as indicated by the error LEDs on the system board or the event logs) to a different memory channel or microprocessor.
4. If the problem follows the DIMM, replace the failing DIMM.
5. (Trained technician only) If the problem occurs on the same DIMM connector, check the DIMM connector. If the connector contains any foreign material or is damaged, replace the system board.
6. (Trained technician only) Remove the affected microprocessor and check the microprocessor socket pins for any damaged pins. If damage is found, replace the system board.
7. (Trained technician only) Replace the affected microprocessor.
8. Manually re-enable all affected DIMMs if the server firmware version is older than UEFI v1.10. If the server firmware version is UEFI v1.10 or newer, disconnect and reconnect the server to the power source and restart the server.
9. (Trained Service technician only) Replace the affected microprocessor.

- **806f010c-2002ffff : Uncorrectable error detected for [PhysicalMemoryElementName] on Subsystem [MemoryElementName]. (DIMM 2)**

This message is for the use case when an implementation has detected a Memory uncorrectable error.

May also be shown as 806f010c2002ffff or 0x806f010c2002ffff

Severity

Error

Serviceable

Yes

Automatically notify support

Yes

Alert Category

Critical - Memory

SNMP Trap ID

41

CIM Information

Prefix: PLAT **ID:** 0138

User Response

Note: Each time you install or remove a DIMM, you must disconnect the server from the power source; then, wait 10 seconds before restarting the server.

1. Refer to TIP H212293 for minimum code level.
2. Check the Lenovo support website for an applicable retain tip or firmware update that applies to this memory error.
3. Swap the affected DIMMs (as indicated by the error LEDs on the system board or the event logs) to a different memory channel or microprocessor.

4. If the problem follows the DIMM, replace the failing DIMM.
5. (Trained technician only) If the problem occurs on the same DIMM connector, check the DIMM connector. If the connector contains any foreign material or is damaged, replace the system board.
6. (Trained technician only) Remove the affected microprocessor and check the microprocessor socket pins for any damaged pins. If damage is found, replace the system board.
7. (Trained technician only) Replace the affected microprocessor.
8. Manually re-enable all affected DIMMs if the server firmware version is older than UEFI v1.10. If the server firmware version is UEFI v1.10 or newer, disconnect and reconnect the server to the power source and restart the server.
9. (Trained Service technician only) Replace the affected microprocessor.

- **806f010c-2003ffff : Uncorrectable error detected for [PhysicalMemoryElementName] on Subsystem [MemoryElementName]. (DIMM 3)**

  This message is for the use case when an implementation has detected a Memory uncorrectable error.

  May also be shown as 806f010c2003ffff or 0x806f010c2003ffff

  Severity
  Error

  Serviceable
  Yes

  Automatically notify support
  Yes

  Alert Category
  Critical - Memory

  SNMP Trap ID
  41

  CIM Information
  Prefix: PLAT **ID:** 0138

  User Response
  Note: Each time you install or remove a DIMM, you must disconnect the server from the power source; then, wait 10 seconds before restarting the server.

  1. Refer to TIP H212293 for minimum code level.
  2. Check the Lenovo support website for an applicable retain tip or firmware update that applies to this memory error.
  3. Swap the affected DIMMs (as indicated by the error LEDs on the system board or the event logs) to a different memory channel or microprocessor.
  4. If the problem follows the DIMM, replace the failing DIMM.
  5. (Trained technician only) If the problem occurs on the same DIMM connector, check the DIMM connector. If the connector contains any foreign material or is damaged, replace the system board.
  6. (Trained technician only) Remove the affected microprocessor and check the microprocessor socket pins for any damaged pins. If damage is found, replace the system board.
  7. (Trained technician only) Replace the affected microprocessor.

8. Manually re-enable all affected DIMMs if the server firmware version is older than UEFI v1.10. If the server firmware version is UEFI v1.10 or newer, disconnect and reconnect the server to the power source and restart the server.
9. (Trained Service technician only) Replace the affected microprocessor.

- **806f010c-2004ffff : Uncorrectable error detected for [PhysicalMemoryElementName] on Subsystem [MemoryElementName]. (DIMM 4)**

  This message is for the use case when an implementation has detected a Memory uncorrectable error.

  May also be shown as 806f010c2004ffff or 0x806f010c2004ffff

  Severity
  Error

  Serviceable
  Yes

  Automatically notify support
  Yes

  Alert Category
  Critical - Memory

  SNMP Trap ID
  41

  CIM Information
  Prefix: PLAT **ID:** 0138

  User Response
  Note: Each time you install or remove a DIMM, you must disconnect the server from the power source; then, wait 10 seconds before restarting the server.

  1. Refer to TIP H212293 for minimum code level.
  2. Check the Lenovo support website for an applicable retain tip or firmware update that applies to this memory error.
  3. Swap the affected DIMMs (as indicated by the error LEDs on the system board or the event logs) to a different memory channel or microprocessor.
  4. If the problem follows the DIMM, replace the failing DIMM.
  5. (Trained technician only) If the problem occurs on the same DIMM connector, check the DIMM connector. If the connector contains any foreign material or is damaged, replace the system board.
  6. (Trained technician only) Remove the affected microprocessor and check the microprocessor socket pins for any damaged pins. If damage is found, replace the system board.
  7. (Trained technician only) Replace the affected microprocessor.
  8. Manually re-enable all affected DIMMs if the server firmware version is older than UEFI v1.10. If the server firmware version is UEFI v1.10 or newer, disconnect and reconnect the server to the power source and restart the server.
  9. (Trained Service technician only) Replace the affected microprocessor.

- **806f010c-2005ffff : Uncorrectable error detected for [PhysicalMemoryElementName] on Subsystem [MemoryElementName]. (DIMM 5)**

  This message is for the use case when an implementation has detected a Memory uncorrectable error.

  May also be shown as 806f010c2005ffff or 0x806f010c2005ffff

Severity
Error

Serviceable
Yes

Automatically notify support
Yes

Alert Category
Critical - Memory

SNMP Trap ID
41

CIM Information
Prefix: PLAT **ID:** 0138

User Response
Note: Each time you install or remove a DIMM, you must disconnect the server from the power source; then, wait 10 seconds before restarting the server.

1. Refer to TIP H212293 for minimum code level.
2. Check the Lenovo support website for an applicable retain tip or firmware update that applies to this memory error.
3. Swap the affected DIMMs (as indicated by the error LEDs on the system board or the event logs) to a different memory channel or microprocessor.
4. If the problem follows the DIMM, replace the failing DIMM.
5. (Trained technician only) If the problem occurs on the same DIMM connector, check the DIMM connector. If the connector contains any foreign material or is damaged, replace the system board.
6. (Trained technician only) Remove the affected microprocessor and check the microprocessor socket pins for any damaged pins. If damage is found, replace the system board.
7. (Trained technician only) Replace the affected microprocessor.
8. Manually re-enable all affected DIMMs if the server firmware version is older than UEFI v1.10. If the server firmware version is UEFI v1.10 or newer, disconnect and reconnect the server to the power source and restart the server.
9. (Trained Service technician only) Replace the affected microprocessor.

- **806f010c-2006ffff : Uncorrectable error detected for [PhysicalMemoryElementName] on Subsystem [MemoryElementName]. (DIMM 6)**

This message is for the use case when an implementation has detected a Memory uncorrectable error.

May also be shown as 806f010c2006ffff or 0x806f010c2006ffff

Severity
Error

Serviceable
Yes

Automatically notify support
Yes

Alert Category
Critical - Memory

SNMP Trap ID

41

CIM Information
Prefix: PLAT **ID:** 0138

User Response
Note: Each time you install or remove a DIMM, you must disconnect the server from the power source; then, wait 10 seconds before restarting the server.

1. Refer to TIP H212293 for minimum code level.
2. Check the Lenovo support website for an applicable retain tip or firmware update that applies to this memory error.
3. Swap the affected DIMMs (as indicated by the error LEDs on the system board or the event logs) to a different memory channel or microprocessor.
4. If the problem follows the DIMM, replace the failing DIMM.
5. (Trained technician only) If the problem occurs on the same DIMM connector, check the DIMM connector. If the connector contains any foreign material or is damaged, replace the system board.
6. (Trained technician only) Remove the affected microprocessor and check the microprocessor socket pins for any damaged pins. If damage is found, replace the system board.
7. (Trained technician only) Replace the affected microprocessor.
8. Manually re-enable all affected DIMMs if the server firmware version is older than UEFI v1.10. If the server firmware version is UEFI v1.10 or newer, disconnect and reconnect the server to the power source and restart the server.
9. (Trained Service technician only) Replace the affected microprocessor.

- **806f010c-2007ffff : Uncorrectable error detected for [PhysicalMemoryElementName] on Subsystem [MemoryElementName]. (DIMM 7)**

This message is for the use case when an implementation has detected a Memory uncorrectable error.

May also be shown as 806f010c2007ffff or 0x806f010c2007ffff

Severity
Error

Serviceable
Yes

Automatically notify support
Yes

Alert Category
Critical - Memory

SNMP Trap ID
41

CIM Information
Prefix: PLAT **ID:** 0138

User Response
Note: Each time you install or remove a DIMM, you must disconnect the server from the power source; then, wait 10 seconds before restarting the server.

1. Refer to TIP H212293 for minimum code level.
2. Check the Lenovo support website for an applicable retain tip or firmware update that applies to this memory error.

3. Swap the affected DIMMs (as indicated by the error LEDs on the system board or the event logs) to a different memory channel or microprocessor.
4. If the problem follows the DIMM, replace the failing DIMM.
5. (Trained technician only) If the problem occurs on the same DIMM connector, check the DIMM connector. If the connector contains any foreign material or is damaged, replace the system board.
6. (Trained technician only) Remove the affected microprocessor and check the microprocessor socket pins for any damaged pins. If damage is found, replace the system board.
7. (Trained technician only) Replace the affected microprocessor.
8. Manually re-enable all affected DIMMs if the server firmware version is older than UEFI v1.10. If the server firmware version is UEFI v1.10 or newer, disconnect and reconnect the server to the power source and restart the server.
9. (Trained Service technician only) Replace the affected microprocessor.

- **806f010c-2008ffff : Uncorrectable error detected for [PhysicalMemoryElementName] on Subsystem [MemoryElementName]. (DIMM 8)**

  This message is for the use case when an implementation has detected a Memory uncorrectable error.

  May also be shown as 806f010c2008ffff or 0x806f010c2008ffff

  Severity
  Error

  Serviceable
  Yes

  Automatically notify support
  Yes

  Alert Category
  Critical - Memory

  SNMP Trap ID
  41

  CIM Information
  Prefix: PLAT **ID:** 0138

  User Response
  Note: Each time you install or remove a DIMM, you must disconnect the server from the power source; then, wait 10 seconds before restarting the server.

  1. Refer to TIP H212293 for minimum code level.
  2. Check the Lenovo support website for an applicable retain tip or firmware update that applies to this memory error.
  3. Swap the affected DIMMs (as indicated by the error LEDs on the system board or the event logs) to a different memory channel or microprocessor.
  4. If the problem follows the DIMM, replace the failing DIMM.
  5. (Trained technician only) If the problem occurs on the same DIMM connector, check the DIMM connector. If the connector contains any foreign material or is damaged, replace the system board.
  6. (Trained technician only) Remove the affected microprocessor and check the microprocessor socket pins for any damaged pins. If damage is found, replace the system board.
  7. (Trained technician only) Replace the affected microprocessor.

8. Manually re-enable all affected DIMMs if the server firmware version is older than UEFI v1.10. If the server firmware version is UEFI v1.10 or newer, disconnect and reconnect the server to the power source and restart the server.
9. (Trained Service technician only) Replace the affected microprocessor.

- **806f010c-2009ffff : Uncorrectable error detected for [PhysicalMemoryElementName] on Subsystem [MemoryElementName]. (DIMM 9)**

  This message is for the use case when an implementation has detected a Memory uncorrectable error.

  May also be shown as 806f010c2009ffff or 0x806f010c2009ffff

  Severity
  Error

  Serviceable
  Yes

  Automatically notify support
  Yes

  Alert Category
  Critical - Memory

  SNMP Trap ID
  41

  CIM Information
  Prefix: PLAT **ID:** 0138

  User Response
  Note: Each time you install or remove a DIMM, you must disconnect the server from the power source; then, wait 10 seconds before restarting the server.

  1. Refer to TIP H212293 for minimum code level.
  2. Check the Lenovo support website for an applicable retain tip or firmware update that applies to this memory error.
  3. Swap the affected DIMMs (as indicated by the error LEDs on the system board or the event logs) to a different memory channel or microprocessor.
  4. If the problem follows the DIMM, replace the failing DIMM.
  5. (Trained technician only) If the problem occurs on the same DIMM connector, check the DIMM connector. If the connector contains any foreign material or is damaged, replace the system board.
  6. (Trained technician only) Remove the affected microprocessor and check the microprocessor socket pins for any damaged pins. If damage is found, replace the system board.
  7. (Trained technician only) Replace the affected microprocessor.
  8. Manually re-enable all affected DIMMs if the server firmware version is older than UEFI v1.10. If the server firmware version is UEFI v1.10 or newer, disconnect and reconnect the server to the power source and restart the server.
  9. (Trained Service technician only) Replace the affected microprocessor.

- **806f010c-200affff : Uncorrectable error detected for [PhysicalMemoryElementName] on Subsystem [MemoryElementName]. (DIMM 10)**

  This message is for the use case when an implementation has detected a Memory uncorrectable error.

  May also be shown as 806f010c200affff or 0x806f010c200affff

Severity
Error

Serviceable
Yes

Automatically notify support
Yes

Alert Category
Critical - Memory

SNMP Trap ID
41

CIM Information
Prefix: PLAT **ID:** 0138

User Response
Note: Each time you install or remove a DIMM, you must disconnect the server from the power source; then, wait 10 seconds before restarting the server.

1. Refer to TIP H212293 for minimum code level.
2. Check the Lenovo support website for an applicable retain tip or firmware update that applies to this memory error.
3. Swap the affected DIMMs (as indicated by the error LEDs on the system board or the event logs) to a different memory channel or microprocessor.
4. If the problem follows the DIMM, replace the failing DIMM.
5. (Trained technician only) If the problem occurs on the same DIMM connector, check the DIMM connector. If the connector contains any foreign material or is damaged, replace the system board.
6. (Trained technician only) Remove the affected microprocessor and check the microprocessor socket pins for any damaged pins. If damage is found, replace the system board.
7. (Trained technician only) Replace the affected microprocessor.
8. Manually re-enable all affected DIMMs if the server firmware version is older than UEFI v1.10. If the server firmware version is UEFI v1.10 or newer, disconnect and reconnect the server to the power source and restart the server.
9. (Trained Service technician only) Replace the affected microprocessor.

- **806f010c-200bffff : Uncorrectable error detected for [PhysicalMemoryElementName] on Subsystem [MemoryElementName]. (DIMM 11)**

This message is for the use case when an implementation has detected a Memory uncorrectable error.

May also be shown as 806f010c200bffff or 0x806f010c200bffff

Severity
Error

Serviceable
Yes

Automatically notify support
Yes

Alert Category
Critical - Memory

SNMP Trap ID

41

CIM Information
Prefix: PLAT **ID:** 0138

User Response
Note: Each time you install or remove a DIMM, you must disconnect the server from the power source; then, wait 10 seconds before restarting the server.

1. Refer to TIP H212293 for minimum code level.
2. Check the Lenovo support website for an applicable retain tip or firmware update that applies to this memory error.
3. Swap the affected DIMMs (as indicated by the error LEDs on the system board or the event logs) to a different memory channel or microprocessor.
4. If the problem follows the DIMM, replace the failing DIMM.
5. (Trained technician only) If the problem occurs on the same DIMM connector, check the DIMM connector. If the connector contains any foreign material or is damaged, replace the system board.
6. (Trained technician only) Remove the affected microprocessor and check the microprocessor socket pins for any damaged pins. If damage is found, replace the system board.
7. (Trained technician only) Replace the affected microprocessor.
8. Manually re-enable all affected DIMMs if the server firmware version is older than UEFI v1.10. If the server firmware version is UEFI v1.10 or newer, disconnect and reconnect the server to the power source and restart the server.
9. (Trained Service technician only) Replace the affected microprocessor.

- **806f010c-200cffff : Uncorrectable error detected for [PhysicalMemoryElementName] on Subsystem [MemoryElementName]. (DIMM 12)**

This message is for the use case when an implementation has detected a Memory uncorrectable error.

May also be shown as 806f010c200cffff or 0x806f010c200cffff

Severity
Error

Serviceable
Yes

Automatically notify support
Yes

Alert Category
Critical - Memory

SNMP Trap ID
41

CIM Information
Prefix: PLAT **ID:** 0138

User Response
Note: Each time you install or remove a DIMM, you must disconnect the server from the power source; then, wait 10 seconds before restarting the server.

1. Refer to TIP H212293 for minimum code level.
2. Check the Lenovo support website for an applicable retain tip or firmware update that applies to this memory error.

3. Swap the affected DIMMs (as indicated by the error LEDs on the system board or the event logs) to a different memory channel or microprocessor.
4. If the problem follows the DIMM, replace the failing DIMM.
5. (Trained technician only) If the problem occurs on the same DIMM connector, check the DIMM connector. If the connector contains any foreign material or is damaged, replace the system board.
6. (Trained technician only) Remove the affected microprocessor and check the microprocessor socket pins for any damaged pins. If damage is found, replace the system board.
7. (Trained technician only) Replace the affected microprocessor.
8. Manually re-enable all affected DIMMs if the server firmware version is older than UEFI v1.10. If the server firmware version is UEFI v1.10 or newer, disconnect and reconnect the server to the power source and restart the server.
9. (Trained Service technician only) Replace the affected microprocessor.

- **806f010c-200dffff : Uncorrectable error detected for [PhysicalMemoryElementName] on Subsystem [MemoryElementName]. (DIMM 13)**

  This message is for the use case when an implementation has detected a Memory uncorrectable error.

  May also be shown as 806f010c200dffff or 0x806f010c200dffff

  Severity
  Error

  Serviceable
  Yes

  Automatically notify support
  Yes

  Alert Category
  Critical - Memory

  SNMP Trap ID
  41

  CIM Information
  Prefix: PLAT **ID:** 0138

  User Response
  Note: Each time you install or remove a DIMM, you must disconnect the server from the power source; then, wait 10 seconds before restarting the server.

  1. Refer to TIP H212293 for minimum code level.
  2. Check the Lenovo support website for an applicable retain tip or firmware update that applies to this memory error.
  3. Swap the affected DIMMs (as indicated by the error LEDs on the system board or the event logs) to a different memory channel or microprocessor.
  4. If the problem follows the DIMM, replace the failing DIMM.
  5. (Trained technician only) If the problem occurs on the same DIMM connector, check the DIMM connector. If the connector contains any foreign material or is damaged, replace the system board.
  6. (Trained technician only) Remove the affected microprocessor and check the microprocessor socket pins for any damaged pins. If damage is found, replace the system board.
  7. (Trained technician only) Replace the affected microprocessor.

8. Manually re-enable all affected DIMMs if the server firmware version is older than UEFI v1.10. If the server firmware version is UEFI v1.10 or newer, disconnect and reconnect the server to the power source and restart the server.
9. (Trained Service technician only) Replace the affected microprocessor.

- **806f010c-200effff : Uncorrectable error detected for [PhysicalMemoryElementName] on Subsystem [MemoryElementName]. (DIMM 14)**

  This message is for the use case when an implementation has detected a Memory uncorrectable error.

  May also be shown as 806f010c200effff or 0x806f010c200effff

  Severity
  Error

  Serviceable
  Yes

  Automatically notify support
  Yes

  Alert Category
  Critical - Memory

  SNMP Trap ID
  41

  CIM Information
  Prefix: PLAT **ID:** 0138

  User Response
  Note: Each time you install or remove a DIMM, you must disconnect the server from the power source; then, wait 10 seconds before restarting the server.

  1. Refer to TIP H212293 for minimum code level.
  2. Check the Lenovo support website for an applicable retain tip or firmware update that applies to this memory error.
  3. Swap the affected DIMMs (as indicated by the error LEDs on the system board or the event logs) to a different memory channel or microprocessor.
  4. If the problem follows the DIMM, replace the failing DIMM.
  5. (Trained technician only) If the problem occurs on the same DIMM connector, check the DIMM connector. If the connector contains any foreign material or is damaged, replace the system board.
  6. (Trained technician only) Remove the affected microprocessor and check the microprocessor socket pins for any damaged pins. If damage is found, replace the system board.
  7. (Trained technician only) Replace the affected microprocessor.
  8. Manually re-enable all affected DIMMs if the server firmware version is older than UEFI v1.10. If the server firmware version is UEFI v1.10 or newer, disconnect and reconnect the server to the power source and restart the server.
  9. (Trained Service technician only) Replace the affected microprocessor.

- **806f010c-200fffff : Uncorrectable error detected for [PhysicalMemoryElementName] on Subsystem [MemoryElementName]. (DIMM 15)**

  This message is for the use case when an implementation has detected a Memory uncorrectable error.

  May also be shown as 806f010c200fffff or 0x806f010c200fffff

Severity
Error

Serviceable
Yes

Automatically notify support
Yes

Alert Category
Critical - Memory

SNMP Trap ID
41

CIM Information
Prefix: PLAT **ID:** 0138

User Response
Note: Each time you install or remove a DIMM, you must disconnect the server from the power source; then, wait 10 seconds before restarting the server.

1. Refer to TIP H212293 for minimum code level.
2. Check the Lenovo support website for an applicable retain tip or firmware update that applies to this memory error.
3. Swap the affected DIMMs (as indicated by the error LEDs on the system board or the event logs) to a different memory channel or microprocessor.
4. If the problem follows the DIMM, replace the failing DIMM.
5. (Trained technician only) If the problem occurs on the same DIMM connector, check the DIMM connector. If the connector contains any foreign material or is damaged, replace the system board.
6. (Trained technician only) Remove the affected microprocessor and check the microprocessor socket pins for any damaged pins. If damage is found, replace the system board.
7. (Trained technician only) Replace the affected microprocessor.
8. Manually re-enable all affected DIMMs if the server firmware version is older than UEFI v1.10. If the server firmware version is UEFI v1.10 or newer, disconnect and reconnect the server to the power source and restart the server.
9. (Trained Service technician only) Replace the affected microprocessor.

- **806f010c-2010ffff : Uncorrectable error detected for [PhysicalMemoryElementName] on Subsystem [MemoryElementName]. (DIMM 16)**

This message is for the use case when an implementation has detected a Memory uncorrectable error.

May also be shown as 806f010c2010ffff or 0x806f010c2010ffff

Severity
Error

Serviceable
Yes

Automatically notify support
Yes

Alert Category
Critical - Memory

SNMP Trap ID

41

CIM Information
Prefix: PLAT **ID:** 0138

User Response
Note: Each time you install or remove a DIMM, you must disconnect the server from the power source; then, wait 10 seconds before restarting the server.

1. Refer to TIP H212293 for minimum code level.
2. Check the Lenovo support website for an applicable retain tip or firmware update that applies to this memory error.
3. Swap the affected DIMMs (as indicated by the error LEDs on the system board or the event logs) to a different memory channel or microprocessor.
4. If the problem follows the DIMM, replace the failing DIMM.
5. (Trained technician only) If the problem occurs on the same DIMM connector, check the DIMM connector. If the connector contains any foreign material or is damaged, replace the system board.
6. (Trained technician only) Remove the affected microprocessor and check the microprocessor socket pins for any damaged pins. If damage is found, replace the system board.
7. (Trained technician only) Replace the affected microprocessor.
8. Manually re-enable all affected DIMMs if the server firmware version is older than UEFI v1.10. If the server firmware version is UEFI v1.10 or newer, disconnect and reconnect the server to the power source and restart the server.
9. (Trained Service technician only) Replace the affected microprocessor.

- **806f010c-2011ffff : Uncorrectable error detected for [PhysicalMemoryElementName] on Subsystem [MemoryElementName]. (DIMM 17)**

This message is for the use case when an implementation has detected a Memory uncorrectable error.

May also be shown as 806f010c2011ffff or 0x806f010c2011ffff

Severity
Error

Serviceable
Yes

Automatically notify support
Yes

Alert Category
Critical - Memory

SNMP Trap ID
41

CIM Information
Prefix: PLAT **ID:** 0138

User Response
Note: Each time you install or remove a DIMM, you must disconnect the server from the power source; then, wait 10 seconds before restarting the server.

1. Refer to TIP H212293 for minimum code level.
2. Check the Lenovo support website for an applicable retain tip or firmware update that applies to this memory error.

3. Swap the affected DIMMs (as indicated by the error LEDs on the system board or the event logs) to a different memory channel or microprocessor.
4. If the problem follows the DIMM, replace the failing DIMM.
5. (Trained technician only) If the problem occurs on the same DIMM connector, check the DIMM connector. If the connector contains any foreign material or is damaged, replace the system board.
6. (Trained technician only) Remove the affected microprocessor and check the microprocessor socket pins for any damaged pins. If damage is found, replace the system board.
7. (Trained technician only) Replace the affected microprocessor.
8. Manually re-enable all affected DIMMs if the server firmware version is older than UEFI v1.10. If the server firmware version is UEFI v1.10 or newer, disconnect and reconnect the server to the power source and restart the server.
9. (Trained Service technician only) Replace the affected microprocessor.

- **806f010c-2012ffff : Uncorrectable error detected for [PhysicalMemoryElementName] on Subsystem [MemoryElementName]. (DIMM 18)**

  This message is for the use case when an implementation has detected a Memory uncorrectable error.

  May also be shown as 806f010c2012ffff or 0x806f010c2012ffff

  Severity
  Error

  Serviceable
  Yes

  Automatically notify support
  Yes

  Alert Category
  Critical - Memory

  SNMP Trap ID
  41

  CIM Information
  Prefix: PLAT **ID:** 0138

  User Response
  Note: Each time you install or remove a DIMM, you must disconnect the server from the power source; then, wait 10 seconds before restarting the server.

  1. Refer to TIP H212293 for minimum code level.
  2. Check the Lenovo support website for an applicable retain tip or firmware update that applies to this memory error.
  3. Swap the affected DIMMs (as indicated by the error LEDs on the system board or the event logs) to a different memory channel or microprocessor.
  4. If the problem follows the DIMM, replace the failing DIMM.
  5. (Trained technician only) If the problem occurs on the same DIMM connector, check the DIMM connector. If the connector contains any foreign material or is damaged, replace the system board.
  6. (Trained technician only) Remove the affected microprocessor and check the microprocessor socket pins for any damaged pins. If damage is found, replace the system board.
  7. (Trained technician only) Replace the affected microprocessor.

8. Manually re-enable all affected DIMMs if the server firmware version is older than UEFI v1.10. If the server firmware version is UEFI v1.10 or newer, disconnect and reconnect the server to the power source and restart the server.
9. (Trained Service technician only) Replace the affected microprocessor.

- **806f010c-2013ffff : Uncorrectable error detected for [PhysicalMemoryElementName] on Subsystem [MemoryElementName]. (DIMM 19)**

  This message is for the use case when an implementation has detected a Memory uncorrectable error.

  May also be shown as 806f010c2013ffff or 0x806f010c2013ffff

  Severity
  Error

  Serviceable
  Yes

  Automatically notify support
  Yes

  Alert Category
  Critical - Memory

  SNMP Trap ID
  41

  CIM Information
  Prefix: PLAT **ID:** 0138

  User Response
  Note: Each time you install or remove a DIMM, you must disconnect the server from the power source; then, wait 10 seconds before restarting the server.

  1. Refer to TIP H212293 for minimum code level.
  2. Check the Lenovo support website for an applicable retain tip or firmware update that applies to this memory error.
  3. Swap the affected DIMMs (as indicated by the error LEDs on the system board or the event logs) to a different memory channel or microprocessor.
  4. If the problem follows the DIMM, replace the failing DIMM.
  5. (Trained technician only) If the problem occurs on the same DIMM connector, check the DIMM connector. If the connector contains any foreign material or is damaged, replace the system board.
  6. (Trained technician only) Remove the affected microprocessor and check the microprocessor socket pins for any damaged pins. If damage is found, replace the system board.
  7. (Trained technician only) Replace the affected microprocessor.
  8. Manually re-enable all affected DIMMs if the server firmware version is older than UEFI v1.10. If the server firmware version is UEFI v1.10 or newer, disconnect and reconnect the server to the power source and restart the server.
  9. (Trained Service technician only) Replace the affected microprocessor.

- **806f010c-2014ffff : Uncorrectable error detected for [PhysicalMemoryElementName] on Subsystem [MemoryElementName]. (DIMM 20)**

  This message is for the use case when an implementation has detected a Memory uncorrectable error.

  May also be shown as 806f010c2014ffff or 0x806f010c2014ffff

Severity
Error

Serviceable
Yes

Automatically notify support
Yes

Alert Category
Critical - Memory

SNMP Trap ID
41

CIM Information
Prefix: PLAT **ID:** 0138

User Response
Note: Each time you install or remove a DIMM, you must disconnect the server from the power source; then, wait 10 seconds before restarting the server.

1. Refer to TIP H212293 for minimum code level.
2. Check the Lenovo support website for an applicable retain tip or firmware update that applies to this memory error.
3. Swap the affected DIMMs (as indicated by the error LEDs on the system board or the event logs) to a different memory channel or microprocessor.
4. If the problem follows the DIMM, replace the failing DIMM.
5. (Trained technician only) If the problem occurs on the same DIMM connector, check the DIMM connector. If the connector contains any foreign material or is damaged, replace the system board.
6. (Trained technician only) Remove the affected microprocessor and check the microprocessor socket pins for any damaged pins. If damage is found, replace the system board.
7. (Trained technician only) Replace the affected microprocessor.
8. Manually re-enable all affected DIMMs if the server firmware version is older than UEFI v1.10. If the server firmware version is UEFI v1.10 or newer, disconnect and reconnect the server to the power source and restart the server.
9. (Trained Service technician only) Replace the affected microprocessor.

- **806f010c-2015ffff : Uncorrectable error detected for [PhysicalMemoryElementName] on Subsystem [MemoryElementName]. (DIMM 21)**

This message is for the use case when an implementation has detected a Memory uncorrectable error.

May also be shown as 806f010c2015ffff or 0x806f010c2015ffff

Severity
Error

Serviceable
Yes

Automatically notify support
Yes

Alert Category
Critical - Memory

SNMP Trap ID

41

CIM Information
Prefix: PLAT **ID:** 0138

User Response
Note: Each time you install or remove a DIMM, you must disconnect the server from the power source; then, wait 10 seconds before restarting the server.

1. Refer to TIP H212293 for minimum code level.
2. Check the Lenovo support website for an applicable retain tip or firmware update that applies to this memory error.
3. Swap the affected DIMMs (as indicated by the error LEDs on the system board or the event logs) to a different memory channel or microprocessor.
4. If the problem follows the DIMM, replace the failing DIMM.
5. (Trained technician only) If the problem occurs on the same DIMM connector, check the DIMM connector. If the connector contains any foreign material or is damaged, replace the system board.
6. (Trained technician only) Remove the affected microprocessor and check the microprocessor socket pins for any damaged pins. If damage is found, replace the system board.
7. (Trained technician only) Replace the affected microprocessor.
8. Manually re-enable all affected DIMMs if the server firmware version is older than UEFI v1.10. If the server firmware version is UEFI v1.10 or newer, disconnect and reconnect the server to the power source and restart the server.
9. (Trained Service technician only) Replace the affected microprocessor.

- **806f010c-2016ffff : Uncorrectable error detected for [PhysicalMemoryElementName] on Subsystem [MemoryElementName]. (DIMM 22)**

This message is for the use case when an implementation has detected a Memory uncorrectable error.

May also be shown as 806f010c2016ffff or 0x806f010c2016ffff

Severity
Error

Serviceable
Yes

Automatically notify support
Yes

Alert Category
Critical - Memory

SNMP Trap ID
41

CIM Information
Prefix: PLAT **ID:** 0138

User Response
Note: Each time you install or remove a DIMM, you must disconnect the server from the power source; then, wait 10 seconds before restarting the server.

1. Refer to TIP H212293 for minimum code level.
2. Check the Lenovo support website for an applicable retain tip or firmware update that applies to this memory error.

3. Swap the affected DIMMs (as indicated by the error LEDs on the system board or the event logs) to a different memory channel or microprocessor.
4. If the problem follows the DIMM, replace the failing DIMM.
5. (Trained technician only) If the problem occurs on the same DIMM connector, check the DIMM connector. If the connector contains any foreign material or is damaged, replace the system board.
6. (Trained technician only) Remove the affected microprocessor and check the microprocessor socket pins for any damaged pins. If damage is found, replace the system board.
7. (Trained technician only) Replace the affected microprocessor.
8. Manually re-enable all affected DIMMs if the server firmware version is older than UEFI v1.10. If the server firmware version is UEFI v1.10 or newer, disconnect and reconnect the server to the power source and restart the server.
9. (Trained Service technician only) Replace the affected microprocessor.

- **806f010c-2017ffff : Uncorrectable error detected for [PhysicalMemoryElementName] on Subsystem [MemoryElementName]. (DIMM 23)**

  This message is for the use case when an implementation has detected a Memory uncorrectable error.

  May also be shown as 806f010c2017ffff or 0x806f010c2017ffff

  Severity
  Error

  Serviceable
  Yes

  Automatically notify support
  Yes

  Alert Category
  Critical - Memory

  SNMP Trap ID
  41

  CIM Information
  Prefix: PLAT **ID:** 0138

  User Response
  Note: Each time you install or remove a DIMM, you must disconnect the server from the power source; then, wait 10 seconds before restarting the server.

  1. Refer to TIP H212293 for minimum code level.
  2. Check the Lenovo support website for an applicable retain tip or firmware update that applies to this memory error.
  3. Swap the affected DIMMs (as indicated by the error LEDs on the system board or the event logs) to a different memory channel or microprocessor.
  4. If the problem follows the DIMM, replace the failing DIMM.
  5. (Trained technician only) If the problem occurs on the same DIMM connector, check the DIMM connector. If the connector contains any foreign material or is damaged, replace the system board.
  6. (Trained technician only) Remove the affected microprocessor and check the microprocessor socket pins for any damaged pins. If damage is found, replace the system board.
  7. (Trained technician only) Replace the affected microprocessor.

8. Manually re-enable all affected DIMMs if the server firmware version is older than UEFI v1.10. If the server firmware version is UEFI v1.10 or newer, disconnect and reconnect the server to the power source and restart the server.
9. (Trained Service technician only) Replace the affected microprocessor.

- **806f010c-2018ffff : Uncorrectable error detected for [PhysicalMemoryElementName] on Subsystem [MemoryElementName]. (DIMM 24)**

  This message is for the use case when an implementation has detected a Memory uncorrectable error.

  May also be shown as 806f010c2018ffff or 0x806f010c2018ffff

  Severity
  Error

  Serviceable
  Yes

  Automatically notify support
  Yes

  Alert Category
  Critical - Memory

  SNMP Trap ID
  41

  CIM Information
  Prefix: PLAT **ID:** 0138

  User Response
  Note: Each time you install or remove a DIMM, you must disconnect the server from the power source; then, wait 10 seconds before restarting the server.

  1. Refer to TIP H212293 for minimum code level.
  2. Check the Lenovo support website for an applicable retain tip or firmware update that applies to this memory error.
  3. Swap the affected DIMMs (as indicated by the error LEDs on the system board or the event logs) to a different memory channel or microprocessor.
  4. If the problem follows the DIMM, replace the failing DIMM.
  5. (Trained technician only) If the problem occurs on the same DIMM connector, check the DIMM connector. If the connector contains any foreign material or is damaged, replace the system board.
  6. (Trained technician only) Remove the affected microprocessor and check the microprocessor socket pins for any damaged pins. If damage is found, replace the system board.
  7. (Trained technician only) Replace the affected microprocessor.
  8. Manually re-enable all affected DIMMs if the server firmware version is older than UEFI v1.10. If the server firmware version is UEFI v1.10 or newer, disconnect and reconnect the server to the power source and restart the server.
  9. (Trained Service technician only) Replace the affected microprocessor.

- **806f010c-2581ffff : Uncorrectable error detected for [PhysicalMemoryElementName] on Subsystem [MemoryElementName]. (All DIMMS)**

  This message is for the use case when an implementation has detected a Memory uncorrectable error.

  May also be shown as 806f010c2581ffff or 0x806f010c2581ffff

Severity
Error

Serviceable
Yes

Automatically notify support
Yes

Alert Category
Critical - Memory

SNMP Trap ID
41

CIM Information
Prefix: PLAT **ID:** 0138

User Response
Note: Each time you install or remove a DIMM, you must disconnect the server from the power source; then, wait 10 seconds before restarting the server.

1. Refer to TIP H212293 for minimum code level.
2. Check the Lenovo support website for an applicable retain tip or firmware update that applies to this memory error.
3. Swap the affected DIMMs (as indicated by the error LEDs on the system board or the event logs) to a different memory channel or microprocessor.
4. If the problem follows the DIMM, replace the failing DIMM.
5. (Trained technician only) If the problem occurs on the same DIMM connector, check the DIMM connector. If the connector contains any foreign material or is damaged, replace the system board.
6. (Trained technician only) Remove the affected microprocessor and check the microprocessor socket pins for any damaged pins. If damage is found, replace the system board.
7. (Trained technician only) Replace the affected microprocessor.
8. Manually re-enable all affected DIMMs if the server firmware version is older than UEFI v1.10. If the server firmware version is UEFI v1.10 or newer, disconnect and reconnect the server to the power source and restart the server.
9. (Trained Service technician only) Replace the affected microprocessor.

One of the DIMMs :

- **806f010d-0400ffff : The Drive [StorageVolumeElementName] has been disabled due to a detected fault. (Drive 0)**

This message is for the use case when an implementation has detected a Drive was Disabled due to fault.

May also be shown as 806f010d0400ffff or 0x806f010d0400ffff

Severity
Error

Serviceable
Yes

Automatically notify support
Yes

Alert Category
Critical - Hard Disk drive

SNMP Trap ID
5

CIM Information
Prefix: PLAT **ID:** 0164

User Response

1. Run the hard disk drive diagnostic test on drive n.
2. Reseat the following components: a. Hard disk drive (wait 1 minute or more before reinstalling the drive) b. Cable from the system board to the backplane
3. Replace the following components one at a time, in the order shown, restarting the server each time: a. Hard disk drive b. Cable from the system board to the backplane c. Hard disk drive backplane (n = hard disk drive number)

- **806f010d-0401ffff : The Drive [StorageVolumeElementName] has been disabled due to a detected fault. (Drive 1)**

This message is for the use case when an implementation has detected a Drive was Disabled due to fault.

May also be shown as 806f010d0401ffff or 0x806f010d0401ffff

Severity
Error

Serviceable
Yes

Automatically notify support
Yes

Alert Category
Critical - Hard Disk drive

SNMP Trap ID
5

CIM Information
Prefix: PLAT **ID:** 0164

User Response

1. Run the hard disk drive diagnostic test on drive n.
2. Reseat the following components: a. Hard disk drive (wait 1 minute or more before reinstalling the drive) b. Cable from the system board to the backplane
3. Replace the following components one at a time, in the order shown, restarting the server each time: a. Hard disk drive b. Cable from the system board to the backplane c. Hard disk drive backplane (n = hard disk drive number)

- **806f010d-0402ffff : The Drive [StorageVolumeElementName] has been disabled due to a detected fault. (Drive 2)**

This message is for the use case when an implementation has detected a Drive was Disabled due to fault.

May also be shown as 806f010d0402ffff or 0x806f010d0402ffff

Severity
Error

Serviceable
Yes

Automatically notify support
Yes

Alert Category
Critical - Hard Disk drive

SNMP Trap ID
5

CIM Information
Prefix: PLAT **ID:** 0164

User Response

1. Run the hard disk drive diagnostic test on drive n.
2. Reseat the following components: a. Hard disk drive (wait 1 minute or more before reinstalling the drive) b. Cable from the system board to the backplane
3. Replace the following components one at a time, in the order shown, restarting the server each time: a. Hard disk drive b. Cable from the system board to the backplane c. Hard disk drive backplane (n = hard disk drive number)

- **806f010d-0403ffff : The Drive [StorageVolumeElementName] has been disabled due to a detected fault. (Drive 3)**

This message is for the use case when an implementation has detected a Drive was Disabled due to fault.

May also be shown as 806f010d0403ffff or 0x806f010d0403ffff

Severity
Error

Serviceable
Yes

Automatically notify support
Yes

Alert Category
Critical - Hard Disk drive

SNMP Trap ID
5

CIM Information
Prefix: PLAT **ID:** 0164

User Response

1. Run the hard disk drive diagnostic test on drive n.
2. Reseat the following components: a. Hard disk drive (wait 1 minute or more before reinstalling the drive) b. Cable from the system board to the backplane
3. Replace the following components one at a time, in the order shown, restarting the server each time: a. Hard disk drive b. Cable from the system board to the backplane c. Hard disk drive backplane (n = hard disk drive number)

- **806f010d-0404ffff : The Drive [StorageVolumeElementName] has been disabled due to a detected fault. (Drive 4)**

This message is for the use case when an implementation has detected a Drive was Disabled due to fault.

May also be shown as 806f010d0404ffff or 0x806f010d0404ffff

Severity
Error

Serviceable
Yes

Automatically notify support
Yes

Alert Category
Critical - Hard Disk drive

SNMP Trap ID
5

CIM Information
Prefix: PLAT **ID:** 0164

User Response

1. Run the hard disk drive diagnostic test on drive n.
2. Reseat the following components: a. Hard disk drive (wait 1 minute or more before reinstalling the drive) b. Cable from the system board to the backplane
3. Replace the following components one at a time, in the order shown, restarting the server each time: a. Hard disk drive b. Cable from the system board to the backplane c. Hard disk drive backplane (n = hard disk drive number)

- **806f010d-0405ffff : The Drive [StorageVolumeElementName] has been disabled due to a detected fault. (Drive 5)**

This message is for the use case when an implementation has detected a Drive was Disabled due to fault.

May also be shown as 806f010d0405ffff or 0x806f010d0405ffff

Severity
Error

Serviceable
Yes

Automatically notify support
Yes

Alert Category
Critical - Hard Disk drive

SNMP Trap ID
5

CIM Information
Prefix: PLAT **ID:** 0164

User Response

1. Run the hard disk drive diagnostic test on drive n.
2. Reseat the following components: a. Hard disk drive (wait 1 minute or more before reinstalling the drive) b. Cable from the system board to the backplane
3. Replace the following components one at a time, in the order shown, restarting the server each time: a. Hard disk drive b. Cable from the system board to the backplane c. Hard disk drive backplane (n = hard disk drive number)

- **806f010d-0406ffff : The Drive [StorageVolumeElementName] has been disabled due to a detected fault. (Drive 6)**

  This message is for the use case when an implementation has detected a Drive was Disabled due to fault.

  May also be shown as 806f010d0406ffff or 0x806f010d0406ffff

  Severity
  Error

  Serviceable
  Yes

  Automatically notify support
  Yes

  Alert Category
  Critical - Hard Disk drive

  SNMP Trap ID
  5

  CIM Information
  Prefix: PLAT **ID:** 0164

  User Response

  1. Run the hard disk drive diagnostic test on drive n.
  2. Reseat the following components: a. Hard disk drive (wait 1 minute or more before reinstalling the drive) b. Cable from the system board to the backplane
  3. Replace the following components one at a time, in the order shown, restarting the server each time: a. Hard disk drive b. Cable from the system board to the backplane c. Hard disk drive backplane (n = hard disk drive number)

- **806f010d-0407ffff : The Drive [StorageVolumeElementName] has been disabled due to a detected fault. (Drive 7)**

  This message is for the use case when an implementation has detected a Drive was Disabled due to fault.

  May also be shown as 806f010d0407ffff or 0x806f010d0407ffff

  Severity
  Error

  Serviceable
  Yes

  Automatically notify support
  Yes

  Alert Category
  Critical - Hard Disk drive

  SNMP Trap ID
  5

  CIM Information
  Prefix: PLAT **ID:** 0164

  User Response

  1. Run the hard disk drive diagnostic test on drive n.

2. Reseat the following components: a. Hard disk drive (wait 1 minute or more before reinstalling the drive) b. Cable from the system board to the backplane
3. Replace the following components one at a time, in the order shown, restarting the server each time: a. Hard disk drive b. Cable from the system board to the backplane c. Hard disk drive backplane (n = hard disk drive number)

- **806f010d-0408ffff : The Drive [StorageVolumeElementName] has been disabled due to a detected fault. (Drive 8)**

  This message is for the use case when an implementation has detected a Drive was Disabled due to fault.

  May also be shown as 806f010d0408ffff or 0x806f010d0408ffff

  Severity
  Error

  Serviceable
  Yes

  Automatically notify support
  Yes

  Alert Category
  Critical - Hard Disk drive

  SNMP Trap ID
  5

  CIM Information
  Prefix: PLAT **ID:** 0164

  User Response

  1. Run the hard disk drive diagnostic test on drive n.
  2. Reseat the following components: a. Hard disk drive (wait 1 minute or more before reinstalling the drive) b. Cable from the system board to the backplane
  3. Replace the following components one at a time, in the order shown, restarting the server each time: a. Hard disk drive b. Cable from the system board to the backplane c. Hard disk drive backplane (n = hard disk drive number)

- **806f010d-0409ffff : The Drive [StorageVolumeElementName] has been disabled due to a detected fault. (Drive 9)**

  This message is for the use case when an implementation has detected a Drive was Disabled due to fault.

  May also be shown as 806f010d0409ffff or 0x806f010d0409ffff

  Severity
  Error

  Serviceable
  Yes

  Automatically notify support
  Yes

  Alert Category
  Critical - Hard Disk drive

  SNMP Trap ID
  5

CIM Information
Prefix: PLAT **ID:** 0164

User Response

1. Run the hard disk drive diagnostic test on drive n.
2. Reseat the following components: a. Hard disk drive (wait 1 minute or more before reinstalling the drive) b. Cable from the system board to the backplane
3. Replace the following components one at a time, in the order shown, restarting the server each time: a. Hard disk drive b. Cable from the system board to the backplane c. Hard disk drive backplane (n = hard disk drive number)

- **806f010d-040affff : The Drive [StorageVolumeElementName] has been disabled due to a detected fault. (Drive 10)**

This message is for the use case when an implementation has detected a Drive was Disabled due to fault.

May also be shown as 806f010d040affff or 0x806f010d040affff

Severity
Error

Serviceable
Yes

Automatically notify support
Yes

Alert Category
Critical - Hard Disk drive

SNMP Trap ID
5

CIM Information
Prefix: PLAT **ID:** 0164

User Response

1. Run the hard disk drive diagnostic test on drive n.
2. Reseat the following components: a. Hard disk drive (wait 1 minute or more before reinstalling the drive) b. Cable from the system board to the backplane
3. Replace the following components one at a time, in the order shown, restarting the server each time: a. Hard disk drive b. Cable from the system board to the backplane c. Hard disk drive backplane (n = hard disk drive number)

- **806f010d-040bffff : The Drive [StorageVolumeElementName] has been disabled due to a detected fault. (Drive 11)**

This message is for the use case when an implementation has detected a Drive was Disabled due to fault.

May also be shown as 806f010d040bffff or 0x806f010d040bffff

Severity
Error

Serviceable
Yes

Automatically notify support
Yes

Alert Category
Critical - Hard Disk drive

SNMP Trap ID
5

CIM Information
Prefix: PLAT **ID:** 0164

User Response

1. Run the hard disk drive diagnostic test on drive n.
2. Reseat the following components: a. Hard disk drive (wait 1 minute or more before reinstalling the drive) b. Cable from the system board to the backplane
3. Replace the following components one at a time, in the order shown, restarting the server each time: a. Hard disk drive b. Cable from the system board to the backplane c. Hard disk drive backplane (n = hard disk drive number)

- **806f010d-040cffff : The Drive [StorageVolumeElementName] has been disabled due to a detected fault. (Drive 12)**

This message is for the use case when an implementation has detected a Drive was Disabled due to fault.

May also be shown as 806f010d040cffff or 0x806f010d040cffff

Severity
Error

Serviceable
Yes

Automatically notify support
Yes

Alert Category
Critical - Hard Disk drive

SNMP Trap ID
5

CIM Information
Prefix: PLAT **ID:** 0164

User Response

1. Run the hard disk drive diagnostic test on drive n.
2. Reseat the following components: a. Hard disk drive (wait 1 minute or more before reinstalling the drive) b. Cable from the system board to the backplane
3. Replace the following components one at a time, in the order shown, restarting the server each time: a. Hard disk drive b. Cable from the system board to the backplane c. Hard disk drive backplane (n = hard disk drive number)

- **806f010d-040dffff : The Drive [StorageVolumeElementName] has been disabled due to a detected fault. (Drive 13)**

This message is for the use case when an implementation has detected a Drive was Disabled due to fault.

May also be shown as 806f010d040dffff or 0x806f010d040dffff

Severity
Error

Serviceable
Yes

Automatically notify support
Yes

Alert Category
Critical - Hard Disk drive

SNMP Trap ID
5

CIM Information
Prefix: PLAT **ID:** 0164

User Response

1. Run the hard disk drive diagnostic test on drive n.
2. Reseat the following components: a. Hard disk drive (wait 1 minute or more before reinstalling the drive) b. Cable from the system board to the backplane
3. Replace the following components one at a time, in the order shown, restarting the server each time: a. Hard disk drive b. Cable from the system board to the backplane c. Hard disk drive backplane (n = hard disk drive number)

- **806f010d-0410ffff : The Drive [StorageVolumeElementName] has been disabled due to a detected fault. (Ext Drive)**

This message is for the use case when an implementation has detected a Drive was Disabled due to fault.

May also be shown as 806f010d0410ffff or 0x806f010d0410ffff

Severity
Error

Serviceable
Yes

Automatically notify support
Yes

Alert Category
Critical - Hard Disk drive

SNMP Trap ID
5

CIM Information
Prefix: PLAT **ID:** 0164

User Response

1. Run the hard disk drive diagnostic test on drive n.
2. Reseat the following components: a. Hard disk drive (wait 1 minute or more before reinstalling the drive) b. Cable from the system board to the backplane
3. Replace the following components one at a time, in the order shown, restarting the server each time: a. Hard disk drive b. Cable from the system board to the backplane c. Hard disk drive backplane (n = hard disk drive number)

- **806f010f-2201ffff : The System [ComputerSystemElementName] encountered a firmware hang. (Firmware Error)**

This message is for the use case when an implementation has detected a System Firmware Hang.

May also be shown as 806f010f2201ffff or 0x806f010f2201ffff

Severity
Error

Serviceable
Yes

Automatically notify support
No

Alert Category
System - Boot failure

SNMP Trap ID
25

CIM Information
Prefix: PLAT **ID:** 0186

User Response

1. Make sure the server meets the minimum configuration to start (see Power-supply LEDs).
2. Update the server firmware on the primary page. Important: Some cluster solutions require specific code levels or coordinated code updates. If the device is part of a cluster solution, verify that the latest level of code is supported for the cluster solution before you update the code.
3. (Trained technician only) Replace the system board.

- **806f0113-0301ffff : A bus timeout has occurred on system [ComputerSystemElementName]. (CPU 1 PECI)**

This message is for the use case when an implementation has detected a Bus Timeout.

May also be shown as 806f01130301ffff or 0x806f01130301ffff

Severity
Error

Serviceable
Yes

Automatically notify support
No

Alert Category
Critical - Other

SNMP Trap ID
50

CIM Information
Prefix: PLAT **ID:** 0224

User Response

1. Reseat the microprocessor, and then restart the server.
2. Replace microprocessor n. (n = microprocessor number)

- **806f0113-0302ffff : A bus timeout has occurred on system [ComputerSystemElementName]. (CPU 2 PECI)**

This message is for the use case when an implementation has detected a Bus Timeout.

May also be shown as 806f01130302ffff or 0x806f01130302ffff

Severity
Error

Serviceable
Yes

Automatically notify support
No

Alert Category
Critical - Other

SNMP Trap ID
50

CIM Information
Prefix: PLAT **ID:** 0224

User Response

1. Reseat the microprocessor, and then restart the server.
2. Replace microprocessor n. (n = microprocessor number)

- **806f011b-0701ffff : The connector [PhysicalConnectorElementName] has encountered a configuration error. (Front USB)**

This message is for the use case when an implementation has detected an Interconnect Configuration Error.

May also be shown as 806f011b0701ffff or 0x806f011b0701ffff

Severity
Error

Serviceable
Yes

Automatically notify support
Yes

Alert Category
Critical - Other

SNMP Trap ID
50

CIM Information
Prefix: PLAT **ID:** 0266

User Response
Reset the front USB cable on the system board.

- **806f011b-0c01ffff : The connector [PhysicalConnectorElementName] has encountered a configuration error. (FP LCD Cable)**

This message is for the use case when an implementation has detected an Interconnect Configuration Error.

May also be shown as 806f011b0c01ffff or 0x806f011b0c01ffff

Severity

Error

Serviceable
Yes

Automatically notify support
Yes

Alert Category
Critical - Other

SNMP Trap ID
50

CIM Information
Prefix: PLAT **ID:** 0266

User Response

1. Check system event log is showing LCD cable sensor has deasserted.
2. Reseat LCD cable on the system board.
3. Reset LCD cable on LCD panel.
4. Replace LCD cable.

- **806f0123-2101ffff : Reboot of system [ComputerSystemElementName] initiated by [WatchdogElementName]. (IPMI Watchdog)**

  This message is for the use case when an implementation has detected a Reboot by a Watchdog occurred.

  May also be shown as 806f01232101ffff or 0x806f01232101ffff

  Severity
  Info

  Serviceable
  No

  Automatically notify support
  No

  Alert Category
  System - Other

  SNMP Trap ID

  CIM Information
  Prefix: PLAT **ID:** 0370

  User Response
  No action; information only.

- **806f0125-0c01ffff : [ManagedElementName] detected as absent. (Front Panel)**

  This message is for the use case when an implementation has detected a Managed Element is Absent.

  May also be shown as 806f01250c01ffff or 0x806f01250c01ffff

  Severity
  Info

  Serviceable

No

Automatically notify support
No

Alert Category
System - Other

SNMP Trap ID

CIM Information
Prefix: PLAT **ID:** 0392

User Response
If there is no GPU/storage tray installed in the system, then the log event is a normal condition. If there is a GPU/storage tray installed in the system, then check the following two portions:

1. PDB (Power Distribution Board) cable is correctly connected from riser card to PDB.
2. Replace another PDB cable.

- **806f0125-1001ffff : [ManagedElementName] detected as absent. (PCI Riser 1)**

This message is for the use case when an implementation has detected a Managed Element is Absent.

May also be shown as 806f01251001ffff or 0x806f01251001ffff

Severity
Info

Serviceable
No

Automatically notify support
No

Alert Category
System - Other

SNMP Trap ID

CIM Information
Prefix: PLAT **ID:** 0392

User Response
If there is no GPU/storage tray installed in the system, then the log event is a normal condition. If there is a GPU/storage tray installed in the system, then check the following two portions:

1. PDB (Power Distribution Board) cable is correctly connected from riser card to PDB.
2. Replace another PDB cable.

- **806f0125-1002ffff : [ManagedElementName] detected as absent. (PCI Riser 2)**

This message is for the use case when an implementation has detected a Managed Element is Absent.

May also be shown as 806f01251002ffff or 0x806f01251002ffff

Severity
Info

Serviceable
No

Automatically notify support
No

Alert Category
System - Other

SNMP Trap ID

CIM Information
Prefix: PLAT **ID:** 0392

User Response
If there is no GPU/storage tray installed in the system, then the log event is a normal condition. If there is a GPU/storage tray installed in the system, then check the following two portions:

1. PDB (Power Distribution Board) cable is correctly connected from riser card to PDB.
2. Replace another PDB cable.

- **806f0125-2c01ffff : [ManagedElementName] detected as absent. (ML2 Card)**

This message is for the use case when an implementation has detected a Managed Element is Absent.

May also be shown as 806f01252c01ffff or 0x806f01252c01ffff

Severity
Info

Serviceable
No

Automatically notify support
No

Alert Category
System - Other

SNMP Trap ID

CIM Information
Prefix: PLAT **ID:** 0392

User Response
If there is no GPU/storage tray installed in the system, then the log event is a normal condition. If there is a GPU/storage tray installed in the system, then check the following two portions:

1. PDB (Power Distribution Board) cable is correctly connected from riser card to PDB.
2. Replace another PDB cable.

- **806f0207-0301ffff : [ProcessorElementName] has Failed with FRB1/BIST condition. (CPU 1)**

This message is for the use case when an implementation has detected a Processor Failed - FRB1/BIST condition.

May also be shown as 806f02070301ffff or 0x806f02070301ffff

Severity
Error

Serviceable
Yes

Automatically notify support

Yes

Alert Category
Critical - CPU

SNMP Trap ID
40

CIM Information
Prefix: PLAT **ID:** 0044

User Response

1. Make sure that the latest levels of firmware and device drivers are installed for all adapters and standard devices, such as Ethernet, SCSI, and SAS. Important: Some cluster solutions require specific code levels or coordinated code updates. If the device is part of a cluster solution, verify that the latest level of code is supported for the cluster solution before you update the code.
2. Update the firmware (UEFI and IMM) to the latest level (Updating the firmware).
3. Run the DSA program.
4. Reseat the adapter.
5. Replace the adapter.
6. (Trained technician only) Replace microprocessor n.
7. (Trained technician only) Replace the system board. (n = microprocessor number)

- **806f0207-0302ffff : [ProcessorElementName] has Failed with FRB1/BIST condition. (CPU 2)**

This message is for the use case when an implementation has detected a Processor Failed - FRB1/BIST condition.

May also be shown as 806f02070302ffff or 0x806f02070302ffff

Severity
Error

Serviceable
Yes

Automatically notify support
Yes

Alert Category
Critical - CPU

SNMP Trap ID
40

CIM Information
Prefix: PLAT **ID:** 0044

User Response

1. Make sure that the latest levels of firmware and device drivers are installed for all adapters and standard devices, such as Ethernet, SCSI, and SAS. Important: Some cluster solutions require specific code levels or coordinated code updates. If the device is part of a cluster solution, verify that the latest level of code is supported for the cluster solution before you update the code.
2. Update the firmware (UEFI and IMM) to the latest level (Updating the firmware).
3. Run the DSA program.
4. Reseat the adapter.
5. Replace the adapter.

6. (Trained technician only) Replace microprocessor n.
7. (Trained technician only) Replace the system board. (n = microprocessor number)

- **806f0207-2584ffff : [ProcessorElementName] has Failed with FRB1/BIST condition. (All CPUs)**

  This message is for the use case when an implementation has detected a Processor Failed - FRB1/BIST condition.

  May also be shown as 806f02072584ffff or 0x806f02072584ffff

  Severity
  Error

  Serviceable
  Yes

  Automatically notify support
  Yes

  Alert Category
  Critical - CPU

  SNMP Trap ID
  40

  CIM Information
  Prefix: PLAT **ID:** 0044

  User Response

  1. Make sure that the latest levels of firmware and device drivers are installed for all adapters and standard devices, such as Ethernet, SCSI, and SAS. Important: Some cluster solutions require specific code levels or coordinated code updates. If the device is part of a cluster solution, verify that the latest level of code is supported for the cluster solution before you update the code.
  2. Update the firmware (UEFI and IMM) to the latest level (Updating the firmware).
  3. Run the DSA program.
  4. Reseat the adapter.
  5. Replace the adapter.
  6. (Trained technician only) Replace microprocessor n.
  7. (Trained technician only) Replace the system board. (n = microprocessor number)

  One of the CPUs :

- **806f020d-0400ffff : Failure Predicted on drive [StorageVolumeElementName] for array [ComputerSystemElementName]. (Drive 0)**

  This message is for the use case when an implementation has detected an Array Failure is Predicted.

  May also be shown as 806f020d0400ffff or 0x806f020d0400ffff

  Severity
  Warning

  Serviceable
  Yes

  Automatically notify support
  Yes

  Alert Category

System - Predicted Failure

SNMP Trap ID
27

CIM Information
Prefix: PLAT **ID:** 0168

User Response

1. Run the hard disk drive diagnostic test on drive n.
2. Reseat the following components: a. Hard disk drive (wait 1 minute or more before reinstalling the drive) b. Cable from the system board to the backplane
3. Replace the following components one at a time, in the order shown, restarting the server each time: a. Hard disk drive b. Cable from the system board to the backplane c. Hard disk drive backplane (n = hard disk drive number)

- **806f020d-0401ffff : Failure Predicted on drive [StorageVolumeElementName] for array [ComputerSystemElementName]. (Drive 1)**

This message is for the use case when an implementation has detected an Array Failure is Predicted.

May also be shown as 806f020d0401ffff or 0x806f020d0401ffff

Severity
Warning

Serviceable
Yes

Automatically notify support
Yes

Alert Category
System - Predicted Failure

SNMP Trap ID
27

CIM Information
Prefix: PLAT **ID:** 0168

User Response

1. Run the hard disk drive diagnostic test on drive n.
2. Reseat the following components: a. Hard disk drive (wait 1 minute or more before reinstalling the drive) b. Cable from the system board to the backplane
3. Replace the following components one at a time, in the order shown, restarting the server each time: a. Hard disk drive b. Cable from the system board to the backplane c. Hard disk drive backplane (n = hard disk drive number)

- **806f020d-0402ffff : Failure Predicted on drive [StorageVolumeElementName] for array [ComputerSystemElementName]. (Drive 2)**

This message is for the use case when an implementation has detected an Array Failure is Predicted.

May also be shown as 806f020d0402ffff or 0x806f020d0402ffff

Severity
Warning

Serviceable

Yes

Automatically notify support
Yes

Alert Category
System - Predicted Failure

SNMP Trap ID
27

CIM Information
Prefix: PLAT **ID:** 0168

User Response

1. Run the hard disk drive diagnostic test on drive n.
2. Reseat the following components: a. Hard disk drive (wait 1 minute or more before reinstalling the drive) b. Cable from the system board to the backplane
3. Replace the following components one at a time, in the order shown, restarting the server each time: a. Hard disk drive b. Cable from the system board to the backplane c. Hard disk drive backplane (n = hard disk drive number)

- **806f020d-0403ffff : Failure Predicted on drive [StorageVolumeElementName] for array [ComputerSystemElementName]. (Drive 3)**

This message is for the use case when an implementation has detected an Array Failure is Predicted.

May also be shown as 806f020d0403ffff or 0x806f020d0403ffff

Severity
Warning

Serviceable
Yes

Automatically notify support
Yes

Alert Category
System - Predicted Failure

SNMP Trap ID
27

CIM Information
Prefix: PLAT **ID:** 0168

User Response

1. Run the hard disk drive diagnostic test on drive n.
2. Reseat the following components: a. Hard disk drive (wait 1 minute or more before reinstalling the drive) b. Cable from the system board to the backplane
3. Replace the following components one at a time, in the order shown, restarting the server each time: a. Hard disk drive b. Cable from the system board to the backplane c. Hard disk drive backplane (n = hard disk drive number)

- **806f020d-0404ffff : Failure Predicted on drive [StorageVolumeElementName] for array [ComputerSystemElementName]. (Drive 4)**

This message is for the use case when an implementation has detected an Array Failure is Predicted.

May also be shown as 806f020d0404ffff or 0x806f020d0404ffff

Severity
Warning

Serviceable
Yes

Automatically notify support
Yes

Alert Category
System - Predicted Failure

SNMP Trap ID
27

CIM Information
Prefix: PLAT **ID:** 0168

User Response

1. Run the hard disk drive diagnostic test on drive n.
2. Reseat the following components: a. Hard disk drive (wait 1 minute or more before reinstalling the drive) b. Cable from the system board to the backplane
3. Replace the following components one at a time, in the order shown, restarting the server each time: a. Hard disk drive b. Cable from the system board to the backplane c. Hard disk drive backplane (n = hard disk drive number)

- **806f020d-0405ffff : Failure Predicted on drive [StorageVolumeElementName] for array [ComputerSystemElementName]. (Drive 5)**

This message is for the use case when an implementation has detected an Array Failure is Predicted.

May also be shown as 806f020d0405ffff or 0x806f020d0405ffff

Severity
Warning

Serviceable
Yes

Automatically notify support
Yes

Alert Category
System - Predicted Failure

SNMP Trap ID
27

CIM Information
Prefix: PLAT **ID:** 0168

User Response

1. Run the hard disk drive diagnostic test on drive n.
2. Reseat the following components: a. Hard disk drive (wait 1 minute or more before reinstalling the drive) b. Cable from the system board to the backplane
3. Replace the following components one at a time, in the order shown, restarting the server each time: a. Hard disk drive b. Cable from the system board to the backplane c. Hard disk drive backplane (n = hard disk drive number)

- **806f020d-0406ffff : Failure Predicted on drive [StorageVolumeElementName] for array [ComputerSystemElementName]. (Drive 6)**

  This message is for the use case when an implementation has detected an Array Failure is Predicted.

  May also be shown as 806f020d0406ffff or 0x806f020d0406ffff

  Severity
  Warning

  Serviceable
  Yes

  Automatically notify support
  Yes

  Alert Category
  System - Predicted Failure

  SNMP Trap ID
  27

  CIM Information
  Prefix: PLAT **ID:** 0168

  User Response

  1. Run the hard disk drive diagnostic test on drive n.
  2. Reseat the following components: a. Hard disk drive (wait 1 minute or more before reinstalling the drive) b. Cable from the system board to the backplane
  3. Replace the following components one at a time, in the order shown, restarting the server each time: a. Hard disk drive b. Cable from the system board to the backplane c. Hard disk drive backplane (n = hard disk drive number)

- **806f020d-0407ffff : Failure Predicted on drive [StorageVolumeElementName] for array [ComputerSystemElementName]. (Drive 7)**

  This message is for the use case when an implementation has detected an Array Failure is Predicted.

  May also be shown as 806f020d0407ffff or 0x806f020d0407ffff

  Severity
  Warning

  Serviceable
  Yes

  Automatically notify support
  Yes

  Alert Category
  System - Predicted Failure

  SNMP Trap ID
  27

  CIM Information
  Prefix: PLAT **ID:** 0168

  User Response

  1. Run the hard disk drive diagnostic test on drive n.

2. Reseat the following components: a. Hard disk drive (wait 1 minute or more before reinstalling the drive) b. Cable from the system board to the backplane
3. Replace the following components one at a time, in the order shown, restarting the server each time: a. Hard disk drive b. Cable from the system board to the backplane c. Hard disk drive backplane (n = hard disk drive number)

- **806f020d-0408ffff : Failure Predicted on drive [StorageVolumeElementName] for array [ComputerSystemElementName]. (Drive 8)**

  This message is for the use case when an implementation has detected an Array Failure is Predicted.

  May also be shown as 806f020d0408ffff or 0x806f020d0408ffff

  Severity
  Warning

  Serviceable
  Yes

  Automatically notify support
  Yes

  Alert Category
  System - Predicted Failure

  SNMP Trap ID
  27

  CIM Information
  Prefix: PLAT **ID:** 0168

  User Response

  1. Run the hard disk drive diagnostic test on drive n.
  2. Reseat the following components: a. Hard disk drive (wait 1 minute or more before reinstalling the drive) b. Cable from the system board to the backplane
  3. Replace the following components one at a time, in the order shown, restarting the server each time: a. Hard disk drive b. Cable from the system board to the backplane c. Hard disk drive backplane (n = hard disk drive number)

- **806f020d-0409ffff : Failure Predicted on drive [StorageVolumeElementName] for array [ComputerSystemElementName]. (Drive 9)**

  This message is for the use case when an implementation has detected an Array Failure is Predicted.

  May also be shown as 806f020d0409ffff or 0x806f020d0409ffff

  Severity
  Warning

  Serviceable
  Yes

  Automatically notify support
  Yes

  Alert Category
  System - Predicted Failure

  SNMP Trap ID
  27

CIM Information
Prefix: PLAT **ID:** 0168

User Response

1. Run the hard disk drive diagnostic test on drive n.
2. Reseat the following components: a. Hard disk drive (wait 1 minute or more before reinstalling the drive) b. Cable from the system board to the backplane
3. Replace the following components one at a time, in the order shown, restarting the server each time: a. Hard disk drive b. Cable from the system board to the backplane c. Hard disk drive backplane (n = hard disk drive number)

- **806f020d-040affff : Failure Predicted on drive [StorageVolumeElementName] for array [ComputerSystemElementName]. (Drive 10)**

This message is for the use case when an implementation has detected an Array Failure is Predicted.

May also be shown as 806f020d040affff or 0x806f020d040affff

Severity
Warning

Serviceable
Yes

Automatically notify support
Yes

Alert Category
System - Predicted Failure

SNMP Trap ID
27

CIM Information
Prefix: PLAT **ID:** 0168

User Response

1. Run the hard disk drive diagnostic test on drive n.
2. Reseat the following components: a. Hard disk drive (wait 1 minute or more before reinstalling the drive) b. Cable from the system board to the backplane
3. Replace the following components one at a time, in the order shown, restarting the server each time: a. Hard disk drive b. Cable from the system board to the backplane c. Hard disk drive backplane (n = hard disk drive number)

- **806f020d-040bffff : Failure Predicted on drive [StorageVolumeElementName] for array [ComputerSystemElementName]. (Drive 11)**

This message is for the use case when an implementation has detected an Array Failure is Predicted.

May also be shown as 806f020d040bffff or 0x806f020d040bffff

Severity
Warning

Serviceable
Yes

Automatically notify support
Yes

Alert Category
System - Predicted Failure

SNMP Trap ID
27

CIM Information
Prefix: PLAT **ID:** 0168

User Response

1. Run the hard disk drive diagnostic test on drive n.
2. Reseat the following components: a. Hard disk drive (wait 1 minute or more before reinstalling the drive) b. Cable from the system board to the backplane
3. Replace the following components one at a time, in the order shown, restarting the server each time: a. Hard disk drive b. Cable from the system board to the backplane c. Hard disk drive backplane (n = hard disk drive number)

- **806f020d-040cffff : Failure Predicted on drive [StorageVolumeElementName] for array [ComputerSystemElementName]. (Drive 12)**

This message is for the use case when an implementation has detected an Array Failure is Predicted.

May also be shown as 806f020d040cffff or 0x806f020d040cffff

Severity
Warning

Serviceable
Yes

Automatically notify support
Yes

Alert Category
System - Predicted Failure

SNMP Trap ID
27

CIM Information
Prefix: PLAT **ID:** 0168

User Response

1. Run the hard disk drive diagnostic test on drive n.
2. Reseat the following components: a. Hard disk drive (wait 1 minute or more before reinstalling the drive) b. Cable from the system board to the backplane
3. Replace the following components one at a time, in the order shown, restarting the server each time: a. Hard disk drive b. Cable from the system board to the backplane c. Hard disk drive backplane (n = hard disk drive number)

- **806f020d-040dffff : Failure Predicted on drive [StorageVolumeElementName] for array [ComputerSystemElementName]. (Drive 13)**

This message is for the use case when an implementation has detected an Array Failure is Predicted.

May also be shown as 806f020d040dffff or 0x806f020d040dffff

Severity
Warning

Serviceable
Yes

Automatically notify support
Yes

Alert Category
System - Predicted Failure

SNMP Trap ID
27

CIM Information
Prefix: PLAT **ID:** 0168

User Response

1. Run the hard disk drive diagnostic test on drive n.
2. Reseat the following components: a. Hard disk drive (wait 1 minute or more before reinstalling the drive) b. Cable from the system board to the backplane
3. Replace the following components one at a time, in the order shown, restarting the server each time: a. Hard disk drive b. Cable from the system board to the backplane c. Hard disk drive backplane (n = hard disk drive number)

- **806f020d-0410ffff : Failure Predicted on drive [StorageVolumeElementName] for array [ComputerSystemElementName]. (Ext Drive)**

This message is for the use case when an implementation has detected an Array Failure is Predicted.

May also be shown as 806f020d0410ffff or 0x806f020d0410ffff

Severity
Warning

Serviceable
Yes

Automatically notify support
Yes

Alert Category
System - Predicted Failure

SNMP Trap ID
27

CIM Information
Prefix: PLAT **ID:** 0168

User Response

1. Run the hard disk drive diagnostic test on drive n.
2. Reseat the following components: a. Hard disk drive (wait 1 minute or more before reinstalling the drive) b. Cable from the system board to the backplane
3. Replace the following components one at a time, in the order shown, restarting the server each time: a. Hard disk drive b. Cable from the system board to the backplane c. Hard disk drive backplane (n = hard disk drive number)

- **806f0223-2101ffff : Powering off system [ComputerSystemElementName] initiated by [WatchdogElementName]. (IPMI Watchdog)**

This message is for the use case when an implementation has detected a Poweroff by Watchdog has occurred.

May also be shown as 806f02232101ffff or 0x806f02232101ffff

Severity
Info

Serviceable
No

Automatically notify support
No

Alert Category
System - Other

SNMP Trap ID

CIM Information
Prefix: PLAT **ID:** 0372

User Response
No action; information only.

- **806f0308-0a01ffff : [PowerSupplyElementName] has lost input. (Power Supply 1)**

This message is for the use case when an implementation has detected a Power Supply that has input that has been lost.

May also be shown as 806f03080a01ffff or 0x806f03080a01ffff

Severity
Info

Serviceable
No

Automatically notify support
No

Alert Category
System - Other

SNMP Trap ID

CIM Information
Prefix: PLAT **ID:** 0100

User Response

1. Reconnect the power cords.
2. Check power supply n LED.
3. See Power-supply LEDs for more information. (n = power supply number)

- **806f0308-0a02ffff : [PowerSupplyElementName] has lost input. (Power Supply 2)**

This message is for the use case when an implementation has detected a Power Supply that has input that has been lost.

May also be shown as 806f03080a02ffff or 0x806f03080a02ffff

Severity
Info

Serviceable
No

Automatically notify support
No

Alert Category
System - Other

SNMP Trap ID

CIM Information
Prefix: PLAT **ID:** 0100

User Response

1. Reconnect the power cords.
2. Check power supply n LED.
3. See Power-supply LEDs for more information. (n = power supply number)

- **806f030c-2001ffff : Scrub Failure for [PhysicalMemoryElementName] on Subsystem [MemoryElementName]. (DIMM 1)**

This message is for the use case when an implementation has detected a Memory Scrub failure.

May also be shown as 806f030c2001ffff or 0x806f030c2001ffff

Severity
Error

Serviceable
Yes

Automatically notify support
No

Alert Category
Critical - Memory

SNMP Trap ID
41

CIM Information
Prefix: PLAT **ID:** 0136

User Response
Note: Each time you install or remove a DIMM, you must disconnect the server from the power source; then, wait 10 seconds before restarting the server.

1. Refer to TIP H212293 for minimum code level.
2. Check the Lenovo support website for an applicable retain tip or firmware update that applies to this memory error.
3. Make sure that the DIMMs are firmly seated and no foreign material is found in the DIMM connector. Then, retry with the same DIMM.
4. If the problem is related to a DIMM, replace the failing DIMM indicated by the error LEDs.

5. If the problem occurs on the same DIMM connector, swap the affected DIMMs (as indicated by the error LEDs on the system board or the event logs) to a different memory channel or microprocessor.
6. (Trained technician only) If the problem occurs on the same DIMM connector, check the DIMM connector. If the connector contains any foreign material or is damaged, replace the system board.
7. (Trained service technician only) Remove the affected microprocessor and check the microprocessor socket pins for any damaged pins. If damage is found, replace the system board.
8. (Trained service technician only) If the problem is related to microprocessor socket pins, replace the system board.

- **806f030c-2002ffff : Scrub Failure for [PhysicalMemoryElementName] on Subsystem [MemoryElementName]. (DIMM 2)**

  This message is for the use case when an implementation has detected a Memory Scrub failure.

  May also be shown as 806f030c2002ffff or 0x806f030c2002ffff

  Severity
  Error

  Serviceable
  Yes

  Automatically notify support
  No

  Alert Category
  Critical - Memory

  SNMP Trap ID
  41

  CIM Information
  Prefix: PLAT **ID:** 0136

  User Response
  Note: Each time you install or remove a DIMM, you must disconnect the server from the power source; then, wait 10 seconds before restarting the server.

  1. Refer to TIP H212293 for minimum code level.
  2. Check the Lenovo support website for an applicable retain tip or firmware update that applies to this memory error.
  3. Make sure that the DIMMs are firmly seated and no foreign material is found in the DIMM connector. Then, retry with the same DIMM.
  4. If the problem is related to a DIMM, replace the failing DIMM indicated by the error LEDs.
  5. If the problem occurs on the same DIMM connector, swap the affected DIMMs (as indicated by the error LEDs on the system board or the event logs) to a different memory channel or microprocessor.
  6. (Trained technician only) If the problem occurs on the same DIMM connector, check the DIMM connector. If the connector contains any foreign material or is damaged, replace the system board.
  7. (Trained service technician only) Remove the affected microprocessor and check the microprocessor socket pins for any damaged pins. If damage is found, replace the system board.

8. (Trained service technician only) If the problem is related to microprocessor socket pins, replace the system board.

- **806f030c-2003ffff : Scrub Failure for [PhysicalMemoryElementName] on Subsystem [MemoryElementName]. (DIMM 3)**

  This message is for the use case when an implementation has detected a Memory Scrub failure.

  May also be shown as 806f030c2003ffff or 0x806f030c2003ffff

  Severity
  Error

  Serviceable
  Yes

  Automatically notify support
  No

  Alert Category
  Critical - Memory

  SNMP Trap ID
  41

  CIM Information
  Prefix: PLAT **ID:** 0136

  User Response
  Note: Each time you install or remove a DIMM, you must disconnect the server from the power source; then, wait 10 seconds before restarting the server.

  1. Refer to TIP H212293 for minimum code level.
  2. Check the Lenovo support website for an applicable retain tip or firmware update that applies to this memory error.
  3. Make sure that the DIMMs are firmly seated and no foreign material is found in the DIMM connector. Then, retry with the same DIMM.
  4. If the problem is related to a DIMM, replace the failing DIMM indicated by the error LEDs.
  5. If the problem occurs on the same DIMM connector, swap the affected DIMMs (as indicated by the error LEDs on the system board or the event logs) to a different memory channel or microprocessor.
  6. (Trained technician only) If the problem occurs on the same DIMM connector, check the DIMM connector. If the connector contains any foreign material or is damaged, replace the system board.
  7. (Trained service technician only) Remove the affected microprocessor and check the microprocessor socket pins for any damaged pins. If damage is found, replace the system board.
  8. (Trained service technician only) If the problem is related to microprocessor socket pins, replace the system board.

- **806f030c-2004ffff : Scrub Failure for [PhysicalMemoryElementName] on Subsystem [MemoryElementName]. (DIMM 4)**

  This message is for the use case when an implementation has detected a Memory Scrub failure.

  May also be shown as 806f030c2004ffff or 0x806f030c2004ffff

  Severity

Error

Serviceable
Yes

Automatically notify support
No

Alert Category
Critical - Memory

SNMP Trap ID
41

CIM Information
Prefix: PLAT **ID:** 0136

User Response
Note: Each time you install or remove a DIMM, you must disconnect the server from the power source; then, wait 10 seconds before restarting the server.

1. Refer to TIP H212293 for minimum code level.
2. Check the Lenovo support website for an applicable retain tip or firmware update that applies to this memory error.
3. Make sure that the DIMMs are firmly seated and no foreign material is found in the DIMM connector. Then, retry with the same DIMM.
4. If the problem is related to a DIMM, replace the failing DIMM indicated by the error LEDs.
5. If the problem occurs on the same DIMM connector, swap the affected DIMMs (as indicated by the error LEDs on the system board or the event logs) to a different memory channel or microprocessor.
6. (Trained technician only) If the problem occurs on the same DIMM connector, check the DIMM connector. If the connector contains any foreign material or is damaged, replace the system board.
7. (Trained service technician only) Remove the affected microprocessor and check the microprocessor socket pins for any damaged pins. If damage is found, replace the system board.
8. (Trained service technician only) If the problem is related to microprocessor socket pins, replace the system board.

- **806f030c-2005ffff : Scrub Failure for [PhysicalMemoryElementName] on Subsystem [MemoryElementName]. (DIMM 5)**

This message is for the use case when an implementation has detected a Memory Scrub failure.

May also be shown as 806f030c2005ffff or 0x806f030c2005ffff

Severity
Error

Serviceable
Yes

Automatically notify support
No

Alert Category
Critical - Memory

SNMP Trap ID

41

CIM Information
Prefix: PLAT **ID:** 0136

User Response
Note: Each time you install or remove a DIMM, you must disconnect the server from the power source; then, wait 10 seconds before restarting the server.

1. Refer to TIP H212293 for minimum code level.
2. Check the Lenovo support website for an applicable retain tip or firmware update that applies to this memory error.
3. Make sure that the DIMMs are firmly seated and no foreign material is found in the DIMM connector. Then, retry with the same DIMM.
4. If the problem is related to a DIMM, replace the failing DIMM indicated by the error LEDs.
5. If the problem occurs on the same DIMM connector, swap the affected DIMMs (as indicated by the error LEDs on the system board or the event logs) to a different memory channel or microprocessor.
6. (Trained technician only) If the problem occurs on the same DIMM connector, check the DIMM connector. If the connector contains any foreign material or is damaged, replace the system board.
7. (Trained service technician only) Remove the affected microprocessor and check the microprocessor socket pins for any damaged pins. If damage is found, replace the system board.
8. (Trained service technician only) If the problem is related to microprocessor socket pins, replace the system board.

- **806f030c-2006ffff : Scrub Failure for [PhysicalMemoryElementName] on Subsystem [MemoryElementName]. (DIMM 6)**

  This message is for the use case when an implementation has detected a Memory Scrub failure.

  May also be shown as 806f030c2006ffff or 0x806f030c2006ffff

  Severity
  Error

  Serviceable
  Yes

  Automatically notify support
  No

  Alert Category
  Critical - Memory

  SNMP Trap ID
  41

  CIM Information
  Prefix: PLAT **ID:** 0136

  User Response
  Note: Each time you install or remove a DIMM, you must disconnect the server from the power source; then, wait 10 seconds before restarting the server.

  1. Refer to TIP H212293 for minimum code level.

2. Check the Lenovo support website for an applicable retain tip or firmware update that applies to this memory error.
3. Make sure that the DIMMs are firmly seated and no foreign material is found in the DIMM connector. Then, retry with the same DIMM.
4. If the problem is related to a DIMM, replace the failing DIMM indicated by the error LEDs.
5. If the problem occurs on the same DIMM connector, swap the affected DIMMs (as indicated by the error LEDs on the system board or the event logs) to a different memory channel or microprocessor.
6. (Trained technician only) If the problem occurs on the same DIMM connector, check the DIMM connector. If the connector contains any foreign material or is damaged, replace the system board.
7. (Trained service technician only) Remove the affected microprocessor and check the microprocessor socket pins for any damaged pins. If damage is found, replace the system board.
8. (Trained service technician only) If the problem is related to microprocessor socket pins, replace the system board.

- **806f030c-2007ffff : Scrub Failure for [PhysicalMemoryElementName] on Subsystem [MemoryElementName]. (DIMM 7)**

  This message is for the use case when an implementation has detected a Memory Scrub failure.

  May also be shown as 806f030c2007ffff or 0x806f030c2007ffff

  Severity
  Error

  Serviceable
  Yes

  Automatically notify support
  No

  Alert Category
  Critical - Memory

  SNMP Trap ID
  41

  CIM Information
  Prefix: PLAT **ID:** 0136

  User Response
  Note: Each time you install or remove a DIMM, you must disconnect the server from the power source; then, wait 10 seconds before restarting the server.

  1. Refer to TIP H212293 for minimum code level.
  2. Check the Lenovo support website for an applicable retain tip or firmware update that applies to this memory error.
  3. Make sure that the DIMMs are firmly seated and no foreign material is found in the DIMM connector. Then, retry with the same DIMM.
  4. If the problem is related to a DIMM, replace the failing DIMM indicated by the error LEDs.
  5. If the problem occurs on the same DIMM connector, swap the affected DIMMs (as indicated by the error LEDs on the system board or the event logs) to a different memory channel or microprocessor.

6. (Trained technician only) If the problem occurs on the same DIMM connector, check the DIMM connector. If the connector contains any foreign material or is damaged, replace the system board.
7. (Trained service technician only) Remove the affected microprocessor and check the microprocessor socket pins for any damaged pins. If damage is found, replace the system board.
8. (Trained service technician only) If the problem is related to microprocessor socket pins, replace the system board.

- **806f030c-2008ffff : Scrub Failure for [PhysicalMemoryElementName] on Subsystem [MemoryElementName]. (DIMM 8)**

  This message is for the use case when an implementation has detected a Memory Scrub failure.

  May also be shown as 806f030c2008ffff or 0x806f030c2008ffff

  Severity
  Error

  Serviceable
  Yes

  Automatically notify support
  No

  Alert Category
  Critical - Memory

  SNMP Trap ID
  41

  CIM Information
  Prefix: PLAT **ID:** 0136

  User Response
  Note: Each time you install or remove a DIMM, you must disconnect the server from the power source; then, wait 10 seconds before restarting the server.

  1. Refer to TIP H212293 for minimum code level.
  2. Check the Lenovo support website for an applicable retain tip or firmware update that applies to this memory error.
  3. Make sure that the DIMMs are firmly seated and no foreign material is found in the DIMM connector. Then, retry with the same DIMM.
  4. If the problem is related to a DIMM, replace the failing DIMM indicated by the error LEDs.
  5. If the problem occurs on the same DIMM connector, swap the affected DIMMs (as indicated by the error LEDs on the system board or the event logs) to a different memory channel or microprocessor.
  6. (Trained technician only) If the problem occurs on the same DIMM connector, check the DIMM connector. If the connector contains any foreign material or is damaged, replace the system board.
  7. (Trained service technician only) Remove the affected microprocessor and check the microprocessor socket pins for any damaged pins. If damage is found, replace the system board.
  8. (Trained service technician only) If the problem is related to microprocessor socket pins, replace the system board.

- **806f030c-2009ffff : Scrub Failure for [PhysicalMemoryElementName] on Subsystem [MemoryElementName]. (DIMM 9)**

  This message is for the use case when an implementation has detected a Memory Scrub failure.

  May also be shown as 806f030c2009ffff or 0x806f030c2009ffff

  Severity
  Error

  Serviceable
  Yes

  Automatically notify support
  No

  Alert Category
  Critical - Memory

  SNMP Trap ID
  41

  CIM Information
  Prefix: PLAT **ID:** 0136

  User Response
  Note: Each time you install or remove a DIMM, you must disconnect the server from the power source; then, wait 10 seconds before restarting the server.

  1. Refer to TIP H212293 for minimum code level.
  2. Check the Lenovo support website for an applicable retain tip or firmware update that applies to this memory error.
  3. Make sure that the DIMMs are firmly seated and no foreign material is found in the DIMM connector. Then, retry with the same DIMM.
  4. If the problem is related to a DIMM, replace the failing DIMM indicated by the error LEDs.
  5. If the problem occurs on the same DIMM connector, swap the affected DIMMs (as indicated by the error LEDs on the system board or the event logs) to a different memory channel or microprocessor.
  6. (Trained technician only) If the problem occurs on the same DIMM connector, check the DIMM connector. If the connector contains any foreign material or is damaged, replace the system board.
  7. (Trained service technician only) Remove the affected microprocessor and check the microprocessor socket pins for any damaged pins. If damage is found, replace the system board.
  8. (Trained service technician only) If the problem is related to microprocessor socket pins, replace the system board.

- **806f030c-200affff : Scrub Failure for [PhysicalMemoryElementName] on Subsystem [MemoryElementName]. (DIMM 10)**

  This message is for the use case when an implementation has detected a Memory Scrub failure.

  May also be shown as 806f030c200affff or 0x806f030c200affff

  Severity
  Error

  Serviceable
  Yes

Automatically notify support
No

Alert Category
Critical - Memory

SNMP Trap ID
41

CIM Information
Prefix: PLAT **ID:** 0136

User Response
Note: Each time you install or remove a DIMM, you must disconnect the server from the power source; then, wait 10 seconds before restarting the server.

1. Refer to TIP H212293 for minimum code level.
2. Check the Lenovo support website for an applicable retain tip or firmware update that applies to this memory error.
3. Make sure that the DIMMs are firmly seated and no foreign material is found in the DIMM connector. Then, retry with the same DIMM.
4. If the problem is related to a DIMM, replace the failing DIMM indicated by the error LEDs.
5. If the problem occurs on the same DIMM connector, swap the affected DIMMs (as indicated by the error LEDs on the system board or the event logs) to a different memory channel or microprocessor.
6. (Trained technician only) If the problem occurs on the same DIMM connector, check the DIMM connector. If the connector contains any foreign material or is damaged, replace the system board.
7. (Trained service technician only) Remove the affected microprocessor and check the microprocessor socket pins for any damaged pins. If damage is found, replace the system board.
8. (Trained service technician only) If the problem is related to microprocessor socket pins, replace the system board.

- **806f030c-200bffff : Scrub Failure for [PhysicalMemoryElementName] on Subsystem [MemoryElementName]. (DIMM 11)**

This message is for the use case when an implementation has detected a Memory Scrub failure.

May also be shown as 806f030c200bffff or 0x806f030c200bffff

Severity
Error

Serviceable
Yes

Automatically notify support
No

Alert Category
Critical - Memory

SNMP Trap ID
41

CIM Information
Prefix: PLAT **ID:** 0136

User Response

Note: Each time you install or remove a DIMM, you must disconnect the server from the power source; then, wait 10 seconds before restarting the server.

1. Refer to TIP H212293 for minimum code level.
2. Check the Lenovo support website for an applicable retain tip or firmware update that applies to this memory error.
3. Make sure that the DIMMs are firmly seated and no foreign material is found in the DIMM connector. Then, retry with the same DIMM.
4. If the problem is related to a DIMM, replace the failing DIMM indicated by the error LEDs.
5. If the problem occurs on the same DIMM connector, swap the affected DIMMs (as indicated by the error LEDs on the system board or the event logs) to a different memory channel or microprocessor.
6. (Trained technician only) If the problem occurs on the same DIMM connector, check the DIMM connector. If the connector contains any foreign material or is damaged, replace the system board.
7. (Trained service technician only) Remove the affected microprocessor and check the microprocessor socket pins for any damaged pins. If damage is found, replace the system board.
8. (Trained service technician only) If the problem is related to microprocessor socket pins, replace the system board.

- **806f030c-200cffff : Scrub Failure for [PhysicalMemoryElementName] on Subsystem [MemoryElementName]. (DIMM 12)**

This message is for the use case when an implementation has detected a Memory Scrub failure.

May also be shown as 806f030c200cffff or 0x806f030c200cffff

Severity

Error

Serviceable

Yes

Automatically notify support

No

Alert Category

Critical - Memory

SNMP Trap ID

41

CIM Information

Prefix: PLAT **ID:** 0136

User Response

Note: Each time you install or remove a DIMM, you must disconnect the server from the power source; then, wait 10 seconds before restarting the server.

1. Refer to TIP H212293 for minimum code level.
2. Check the Lenovo support website for an applicable retain tip or firmware update that applies to this memory error.
3. Make sure that the DIMMs are firmly seated and no foreign material is found in the DIMM connector. Then, retry with the same DIMM.
4. If the problem is related to a DIMM, replace the failing DIMM indicated by the error LEDs.

5. If the problem occurs on the same DIMM connector, swap the affected DIMMs (as indicated by the error LEDs on the system board or the event logs) to a different memory channel or microprocessor.
6. (Trained technician only) If the problem occurs on the same DIMM connector, check the DIMM connector. If the connector contains any foreign material or is damaged, replace the system board.
7. (Trained service technician only) Remove the affected microprocessor and check the microprocessor socket pins for any damaged pins. If damage is found, replace the system board.
8. (Trained service technician only) If the problem is related to microprocessor socket pins, replace the system board.

- **806f030c-200dffff : Scrub Failure for [PhysicalMemoryElementName] on Subsystem [MemoryElementName]. (DIMM 13)**

  This message is for the use case when an implementation has detected a Memory Scrub failure.

  May also be shown as 806f030c200dffff or 0x806f030c200dffff

  Severity
  Error

  Serviceable
  Yes

  Automatically notify support
  No

  Alert Category
  Critical - Memory

  SNMP Trap ID
  41

  CIM Information
  Prefix: PLAT **ID:** 0136

  User Response
  Note: Each time you install or remove a DIMM, you must disconnect the server from the power source; then, wait 10 seconds before restarting the server.

  1. Refer to TIP H212293 for minimum code level.
  2. Check the Lenovo support website for an applicable retain tip or firmware update that applies to this memory error.
  3. Make sure that the DIMMs are firmly seated and no foreign material is found in the DIMM connector. Then, retry with the same DIMM.
  4. If the problem is related to a DIMM, replace the failing DIMM indicated by the error LEDs.
  5. If the problem occurs on the same DIMM connector, swap the affected DIMMs (as indicated by the error LEDs on the system board or the event logs) to a different memory channel or microprocessor.
  6. (Trained technician only) If the problem occurs on the same DIMM connector, check the DIMM connector. If the connector contains any foreign material or is damaged, replace the system board.
  7. (Trained service technician only) Remove the affected microprocessor and check the microprocessor socket pins for any damaged pins. If damage is found, replace the system board.

8. (Trained service technician only) If the problem is related to microprocessor socket pins, replace the system board.

- **806f030c-200effff : Scrub Failure for [PhysicalMemoryElementName] on Subsystem [MemoryElementName]. (DIMM 14)**

  This message is for the use case when an implementation has detected a Memory Scrub failure.

  May also be shown as 806f030c200effff or 0x806f030c200effff

  Severity
  Error

  Serviceable
  Yes

  Automatically notify support
  No

  Alert Category
  Critical - Memory

  SNMP Trap ID
  41

  CIM Information
  Prefix: PLAT **ID:** 0136

  User Response
  Note: Each time you install or remove a DIMM, you must disconnect the server from the power source; then, wait 10 seconds before restarting the server.

  1. Refer to TIP H212293 for minimum code level.
  2. Check the Lenovo support website for an applicable retain tip or firmware update that applies to this memory error.
  3. Make sure that the DIMMs are firmly seated and no foreign material is found in the DIMM connector. Then, retry with the same DIMM.
  4. If the problem is related to a DIMM, replace the failing DIMM indicated by the error LEDs.
  5. If the problem occurs on the same DIMM connector, swap the affected DIMMs (as indicated by the error LEDs on the system board or the event logs) to a different memory channel or microprocessor.
  6. (Trained technician only) If the problem occurs on the same DIMM connector, check the DIMM connector. If the connector contains any foreign material or is damaged, replace the system board.
  7. (Trained service technician only) Remove the affected microprocessor and check the microprocessor socket pins for any damaged pins. If damage is found, replace the system board.
  8. (Trained service technician only) If the problem is related to microprocessor socket pins, replace the system board.

- **806f030c-200fffff : Scrub Failure for [PhysicalMemoryElementName] on Subsystem [MemoryElementName]. (DIMM 15)**

  This message is for the use case when an implementation has detected a Memory Scrub failure.

  May also be shown as 806f030c200fffff or 0x806f030c200fffff

  Severity

Error

Serviceable
Yes

Automatically notify support
No

Alert Category
Critical - Memory

SNMP Trap ID
41

CIM Information
Prefix: PLAT **ID:** 0136

User Response
Note: Each time you install or remove a DIMM, you must disconnect the server from the power source; then, wait 10 seconds before restarting the server.

1. Refer to TIP H212293 for minimum code level.
2. Check the Lenovo support website for an applicable retain tip or firmware update that applies to this memory error.
3. Make sure that the DIMMs are firmly seated and no foreign material is found in the DIMM connector. Then, retry with the same DIMM.
4. If the problem is related to a DIMM, replace the failing DIMM indicated by the error LEDs.
5. If the problem occurs on the same DIMM connector, swap the affected DIMMs (as indicated by the error LEDs on the system board or the event logs) to a different memory channel or microprocessor.
6. (Trained technician only) If the problem occurs on the same DIMM connector, check the DIMM connector. If the connector contains any foreign material or is damaged, replace the system board.
7. (Trained service technician only) Remove the affected microprocessor and check the microprocessor socket pins for any damaged pins. If damage is found, replace the system board.
8. (Trained service technician only) If the problem is related to microprocessor socket pins, replace the system board.

- **806f030c-2010ffff : Scrub Failure for [PhysicalMemoryElementName] on Subsystem [MemoryElementName]. (DIMM 16)**

This message is for the use case when an implementation has detected a Memory Scrub failure.

May also be shown as 806f030c2010ffff or 0x806f030c2010ffff

Severity
Error

Serviceable
Yes

Automatically notify support
No

Alert Category
Critical - Memory

SNMP Trap ID

41

CIM Information

Prefix: PLAT **ID:** 0136

User Response

Note: Each time you install or remove a DIMM, you must disconnect the server from the power source; then, wait 10 seconds before restarting the server.

1. Refer to TIP H212293 for minimum code level.
2. Check the Lenovo support website for an applicable retain tip or firmware update that applies to this memory error.
3. Make sure that the DIMMs are firmly seated and no foreign material is found in the DIMM connector. Then, retry with the same DIMM.
4. If the problem is related to a DIMM, replace the failing DIMM indicated by the error LEDs.
5. If the problem occurs on the same DIMM connector, swap the affected DIMMs (as indicated by the error LEDs on the system board or the event logs) to a different memory channel or microprocessor.
6. (Trained technician only) If the problem occurs on the same DIMM connector, check the DIMM connector. If the connector contains any foreign material or is damaged, replace the system board.
7. (Trained service technician only) Remove the affected microprocessor and check the microprocessor socket pins for any damaged pins. If damage is found, replace the system board.
8. (Trained service technician only) If the problem is related to microprocessor socket pins, replace the system board.

- **806f030c-2011ffff : Scrub Failure for [PhysicalMemoryElementName] on Subsystem [MemoryElementName]. (DIMM 17)**

This message is for the use case when an implementation has detected a Memory Scrub failure.

May also be shown as 806f030c2011ffff or 0x806f030c2011ffff

Severity

Error

Serviceable

Yes

Automatically notify support

No

Alert Category

Critical - Memory

SNMP Trap ID

41

CIM Information

Prefix: PLAT **ID:** 0136

User Response

Note: Each time you install or remove a DIMM, you must disconnect the server from the power source; then, wait 10 seconds before restarting the server.

1. Refer to TIP H212293 for minimum code level.

2. Check the Lenovo support website for an applicable retain tip or firmware update that applies to this memory error.
3. Make sure that the DIMMs are firmly seated and no foreign material is found in the DIMM connector. Then, retry with the same DIMM.
4. If the problem is related to a DIMM, replace the failing DIMM indicated by the error LEDs.
5. If the problem occurs on the same DIMM connector, swap the affected DIMMs (as indicated by the error LEDs on the system board or the event logs) to a different memory channel or microprocessor.
6. (Trained technician only) If the problem occurs on the same DIMM connector, check the DIMM connector. If the connector contains any foreign material or is damaged, replace the system board.
7. (Trained service technician only) Remove the affected microprocessor and check the microprocessor socket pins for any damaged pins. If damage is found, replace the system board.
8. (Trained service technician only) If the problem is related to microprocessor socket pins, replace the system board.

- **806f030c-2012ffff : Scrub Failure for [PhysicalMemoryElementName] on Subsystem [MemoryElementName]. (DIMM 18)**

  This message is for the use case when an implementation has detected a Memory Scrub failure.

  May also be shown as 806f030c2012ffff or 0x806f030c2012ffff

  Severity
  Error

  Serviceable
  Yes

  Automatically notify support
  No

  Alert Category
  Critical - Memory

  SNMP Trap ID
  41

  CIM Information
  Prefix: PLAT **ID:** 0136

  User Response
  Note: Each time you install or remove a DIMM, you must disconnect the server from the power source; then, wait 10 seconds before restarting the server.

  1. Refer to TIP H212293 for minimum code level.
  2. Check the Lenovo support website for an applicable retain tip or firmware update that applies to this memory error.
  3. Make sure that the DIMMs are firmly seated and no foreign material is found in the DIMM connector. Then, retry with the same DIMM.
  4. If the problem is related to a DIMM, replace the failing DIMM indicated by the error LEDs.
  5. If the problem occurs on the same DIMM connector, swap the affected DIMMs (as indicated by the error LEDs on the system board or the event logs) to a different memory channel or microprocessor.

6. (Trained technician only) If the problem occurs on the same DIMM connector, check the DIMM connector. If the connector contains any foreign material or is damaged, replace the system board.
7. (Trained service technician only) Remove the affected microprocessor and check the microprocessor socket pins for any damaged pins. If damage is found, replace the system board.
8. (Trained service technician only) If the problem is related to microprocessor socket pins, replace the system board.

- **806f030c-2013ffff : Scrub Failure for [PhysicalMemoryElementName] on Subsystem [MemoryElementName]. (DIMM 19)**

  This message is for the use case when an implementation has detected a Memory Scrub failure.

  May also be shown as 806f030c2013ffff or 0x806f030c2013ffff

  Severity
  Error

  Serviceable
  Yes

  Automatically notify support
  No

  Alert Category
  Critical - Memory

  SNMP Trap ID
  41

  CIM Information
  Prefix: PLAT **ID:** 0136

  User Response
  Note: Each time you install or remove a DIMM, you must disconnect the server from the power source; then, wait 10 seconds before restarting the server.

  1. Refer to TIP H212293 for minimum code level.
  2. Check the Lenovo support website for an applicable retain tip or firmware update that applies to this memory error.
  3. Make sure that the DIMMs are firmly seated and no foreign material is found in the DIMM connector. Then, retry with the same DIMM.
  4. If the problem is related to a DIMM, replace the failing DIMM indicated by the error LEDs.
  5. If the problem occurs on the same DIMM connector, swap the affected DIMMs (as indicated by the error LEDs on the system board or the event logs) to a different memory channel or microprocessor.
  6. (Trained technician only) If the problem occurs on the same DIMM connector, check the DIMM connector. If the connector contains any foreign material or is damaged, replace the system board.
  7. (Trained service technician only) Remove the affected microprocessor and check the microprocessor socket pins for any damaged pins. If damage is found, replace the system board.
  8. (Trained service technician only) If the problem is related to microprocessor socket pins, replace the system board.

- **806f030c-2014ffff : Scrub Failure for [PhysicalMemoryElementName] on Subsystem [MemoryElementName]. (DIMM 20)**

  This message is for the use case when an implementation has detected a Memory Scrub failure.

  May also be shown as 806f030c2014ffff or 0x806f030c2014ffff

  Severity
  Error

  Serviceable
  Yes

  Automatically notify support
  No

  Alert Category
  Critical - Memory

  SNMP Trap ID
  41

  CIM Information
  Prefix: PLAT **ID:** 0136

  User Response
  Note: Each time you install or remove a DIMM, you must disconnect the server from the power source; then, wait 10 seconds before restarting the server.

  1. Refer to TIP H212293 for minimum code level.
  2. Check the Lenovo support website for an applicable retain tip or firmware update that applies to this memory error.
  3. Make sure that the DIMMs are firmly seated and no foreign material is found in the DIMM connector. Then, retry with the same DIMM.
  4. If the problem is related to a DIMM, replace the failing DIMM indicated by the error LEDs.
  5. If the problem occurs on the same DIMM connector, swap the affected DIMMs (as indicated by the error LEDs on the system board or the event logs) to a different memory channel or microprocessor.
  6. (Trained technician only) If the problem occurs on the same DIMM connector, check the DIMM connector. If the connector contains any foreign material or is damaged, replace the system board.
  7. (Trained service technician only) Remove the affected microprocessor and check the microprocessor socket pins for any damaged pins. If damage is found, replace the system board.
  8. (Trained service technician only) If the problem is related to microprocessor socket pins, replace the system board.

- **806f030c-2015ffff : Scrub Failure for [PhysicalMemoryElementName] on Subsystem [MemoryElementName]. (DIMM 21)**

  This message is for the use case when an implementation has detected a Memory Scrub failure.

  May also be shown as 806f030c2015ffff or 0x806f030c2015ffff

  Severity
  Error

  Serviceable
  Yes

Automatically notify support
No

Alert Category
Critical - Memory

SNMP Trap ID
41

CIM Information
Prefix: PLAT **ID:** 0136

User Response
Note: Each time you install or remove a DIMM, you must disconnect the server from the power source; then, wait 10 seconds before restarting the server.

1. Refer to TIP H212293 for minimum code level.
2. Check the Lenovo support website for an applicable retain tip or firmware update that applies to this memory error.
3. Make sure that the DIMMs are firmly seated and no foreign material is found in the DIMM connector. Then, retry with the same DIMM.
4. If the problem is related to a DIMM, replace the failing DIMM indicated by the error LEDs.
5. If the problem occurs on the same DIMM connector, swap the affected DIMMs (as indicated by the error LEDs on the system board or the event logs) to a different memory channel or microprocessor.
6. (Trained technician only) If the problem occurs on the same DIMM connector, check the DIMM connector. If the connector contains any foreign material or is damaged, replace the system board.
7. (Trained service technician only) Remove the affected microprocessor and check the microprocessor socket pins for any damaged pins. If damage is found, replace the system board.
8. (Trained service technician only) If the problem is related to microprocessor socket pins, replace the system board.

- **806f030c-2016ffff : Scrub Failure for [PhysicalMemoryElementName] on Subsystem [MemoryElementName]. (DIMM 22)**

This message is for the use case when an implementation has detected a Memory Scrub failure.

May also be shown as 806f030c2016ffff or 0x806f030c2016ffff

Severity
Error

Serviceable
Yes

Automatically notify support
No

Alert Category
Critical - Memory

SNMP Trap ID
41

CIM Information
Prefix: PLAT **ID:** 0136

User Response

Note: Each time you install or remove a DIMM, you must disconnect the server from the power source; then, wait 10 seconds before restarting the server.

1. Refer to TIP H212293 for minimum code level.
2. Check the Lenovo support website for an applicable retain tip or firmware update that applies to this memory error.
3. Make sure that the DIMMs are firmly seated and no foreign material is found in the DIMM connector. Then, retry with the same DIMM.
4. If the problem is related to a DIMM, replace the failing DIMM indicated by the error LEDs.
5. If the problem occurs on the same DIMM connector, swap the affected DIMMs (as indicated by the error LEDs on the system board or the event logs) to a different memory channel or microprocessor.
6. (Trained technician only) If the problem occurs on the same DIMM connector, check the DIMM connector. If the connector contains any foreign material or is damaged, replace the system board.
7. (Trained service technician only) Remove the affected microprocessor and check the microprocessor socket pins for any damaged pins. If damage is found, replace the system board.
8. (Trained service technician only) If the problem is related to microprocessor socket pins, replace the system board.

- **806f030c-2017ffff : Scrub Failure for [PhysicalMemoryElementName] on Subsystem [MemoryElementName]. (DIMM 23)**

This message is for the use case when an implementation has detected a Memory Scrub failure.

May also be shown as 806f030c2017ffff or 0x806f030c2017ffff

Severity

Error

Serviceable

Yes

Automatically notify support

No

Alert Category

Critical - Memory

SNMP Trap ID

41

CIM Information

Prefix: PLAT **ID:** 0136

User Response

Note: Each time you install or remove a DIMM, you must disconnect the server from the power source; then, wait 10 seconds before restarting the server.

1. Refer to TIP H212293 for minimum code level.
2. Check the Lenovo support website for an applicable retain tip or firmware update that applies to this memory error.
3. Make sure that the DIMMs are firmly seated and no foreign material is found in the DIMM connector. Then, retry with the same DIMM.
4. If the problem is related to a DIMM, replace the failing DIMM indicated by the error LEDs.

5. If the problem occurs on the same DIMM connector, swap the affected DIMMs (as indicated by the error LEDs on the system board or the event logs) to a different memory channel or microprocessor.
6. (Trained technician only) If the problem occurs on the same DIMM connector, check the DIMM connector. If the connector contains any foreign material or is damaged, replace the system board.
7. (Trained service technician only) Remove the affected microprocessor and check the microprocessor socket pins for any damaged pins. If damage is found, replace the system board.
8. (Trained service technician only) If the problem is related to microprocessor socket pins, replace the system board.

- **806f030c-2018ffff : Scrub Failure for [PhysicalMemoryElementName] on Subsystem [MemoryElementName]. (DIMM 24)**

  This message is for the use case when an implementation has detected a Memory Scrub failure.

  May also be shown as 806f030c2018ffff or 0x806f030c2018ffff

  Severity
  Error

  Serviceable
  Yes

  Automatically notify support
  No

  Alert Category
  Critical - Memory

  SNMP Trap ID
  41

  CIM Information
  Prefix: PLAT **ID:** 0136

  User Response
  Note: Each time you install or remove a DIMM, you must disconnect the server from the power source; then, wait 10 seconds before restarting the server.

  1. Refer to TIP H212293 for minimum code level.
  2. Check the Lenovo support website for an applicable retain tip or firmware update that applies to this memory error.
  3. Make sure that the DIMMs are firmly seated and no foreign material is found in the DIMM connector. Then, retry with the same DIMM.
  4. If the problem is related to a DIMM, replace the failing DIMM indicated by the error LEDs.
  5. If the problem occurs on the same DIMM connector, swap the affected DIMMs (as indicated by the error LEDs on the system board or the event logs) to a different memory channel or microprocessor.
  6. (Trained technician only) If the problem occurs on the same DIMM connector, check the DIMM connector. If the connector contains any foreign material or is damaged, replace the system board.
  7. (Trained service technician only) Remove the affected microprocessor and check the microprocessor socket pins for any damaged pins. If damage is found, replace the system board.

8. (Trained service technician only) If the problem is related to microprocessor socket pins, replace the system board.

- **806f030c-2581ffff : Scrub Failure for [PhysicalMemoryElementName] on Subsystem [MemoryElementName]. (All DIMMS)**

  This message is for the use case when an implementation has detected a Memory Scrub failure.

  May also be shown as 806f030c2581ffff or 0x806f030c2581ffff

  Severity
  Error

  Serviceable
  Yes

  Automatically notify support
  No

  Alert Category
  Critical - Memory

  SNMP Trap ID
  41

  CIM Information
  Prefix: PLAT **ID:** 0136

  User Response
  Note: Each time you install or remove a DIMM, you must disconnect the server from the power source; then, wait 10 seconds before restarting the server.

  1. Refer to TIP H212293 for minimum code level.
  2. Check the Lenovo support website for an applicable retain tip or firmware update that applies to this memory error.
  3. Make sure that the DIMMs are firmly seated and no foreign material is found in the DIMM connector. Then, retry with the same DIMM.
  4. If the problem is related to a DIMM, replace the failing DIMM indicated by the error LEDs.
  5. If the problem occurs on the same DIMM connector, swap the affected DIMMs (as indicated by the error LEDs on the system board or the event logs) to a different memory channel or microprocessor.
  6. (Trained technician only) If the problem occurs on the same DIMM connector, check the DIMM connector. If the connector contains any foreign material or is damaged, replace the system board.
  7. (Trained service technician only) Remove the affected microprocessor and check the microprocessor socket pins for any damaged pins. If damage is found, replace the system board.
  8. (Trained service technician only) If the problem is related to microprocessor socket pins, replace the system board.

  One of the DIMMs :

- **806f030d-0400ffff : Hot Spare enabled for [ComputerSystemElementName]. (Drive 0)**

  This message is for the use case when an implementation has detected a Hot Spare has been Enabled.

  May also be shown as 806f030d0400ffff or 0x806f030d0400ffff

  Severity

Info

Serviceable
No

Automatically notify support
No

Alert Category
System - Other

SNMP Trap ID

CIM Information
Prefix: PLAT **ID:** 0170

User Response
No action; information only.

- **806f030d-0401ffff : Hot Spare enabled for [ComputerSystemElementName]. (Drive 1)**

  This message is for the use case when an implementation has detected a Hot Spare has been Enabled.

  May also be shown as 806f030d0401ffff or 0x806f030d0401ffff

  Severity
  Info

  Serviceable
  No

  Automatically notify support
  No

  Alert Category
  System - Other

  SNMP Trap ID

  CIM Information
  Prefix: PLAT **ID:** 0170

  User Response
  No action; information only.

- **806f030d-0402ffff : Hot Spare enabled for [ComputerSystemElementName]. (Drive 2)**

  This message is for the use case when an implementation has detected a Hot Spare has been Enabled.

  May also be shown as 806f030d0402ffff or 0x806f030d0402ffff

  Severity
  Info

  Serviceable
  No

  Automatically notify support
  No

  Alert Category
  System - Other

SNMP Trap ID

CIM Information
Prefix: PLAT **ID:** 0170

User Response
No action; information only.

- **806f030d-0403ffff : Hot Spare enabled for [ComputerSystemElementName]. (Drive 3)**

This message is for the use case when an implementation has detected a Hot Spare has been Enabled.

May also be shown as 806f030d0403ffff or 0x806f030d0403ffff

Severity
Info

Serviceable
No

Automatically notify support
No

Alert Category
System - Other

SNMP Trap ID

CIM Information
Prefix: PLAT **ID:** 0170

User Response
No action; information only.

- **806f030d-0404ffff : Hot Spare enabled for [ComputerSystemElementName]. (Drive 4)**

This message is for the use case when an implementation has detected a Hot Spare has been Enabled.

May also be shown as 806f030d0404ffff or 0x806f030d0404ffff

Severity
Info

Serviceable
No

Automatically notify support
No

Alert Category
System - Other

SNMP Trap ID

CIM Information
Prefix: PLAT **ID:** 0170

User Response
No action; information only.

- **806f030d-0405ffff : Hot Spare enabled for [ComputerSystemElementName]. (Drive 5)**

This message is for the use case when an implementation has detected a Hot Spare has been Enabled.

May also be shown as 806f030d0405ffff or 0x806f030d0405ffff

Severity
Info

Serviceable
No

Automatically notify support
No

Alert Category
System - Other

SNMP Trap ID

CIM Information
Prefix: PLAT **ID:** 0170

User Response
No action; information only.

- **806f030d-0406ffff : Hot Spare enabled for [ComputerSystemElementName]. (Drive 6)**

This message is for the use case when an implementation has detected a Hot Spare has been Enabled.

May also be shown as 806f030d0406ffff or 0x806f030d0406ffff

Severity
Info

Serviceable
No

Automatically notify support
No

Alert Category
System - Other

SNMP Trap ID

CIM Information
Prefix: PLAT **ID:** 0170

User Response
No action; information only.

- **806f030d-0407ffff : Hot Spare enabled for [ComputerSystemElementName]. (Drive 7)**

This message is for the use case when an implementation has detected a Hot Spare has been Enabled.

May also be shown as 806f030d0407ffff or 0x806f030d0407ffff

Severity
Info

Serviceable
No

Automatically notify support
No

Alert Category
System - Other

SNMP Trap ID

CIM Information
Prefix: PLAT **ID:** 0170

User Response
No action; information only.

- **806f030d-0408ffff : Hot Spare enabled for [ComputerSystemElementName]. (Drive 8)**

  This message is for the use case when an implementation has detected a Hot Spare has been Enabled.

  May also be shown as 806f030d0408ffff or 0x806f030d0408ffff

  Severity
  Info

  Serviceable
  No

  Automatically notify support
  No

  Alert Category
  System - Other

  SNMP Trap ID

  CIM Information
  Prefix: PLAT **ID:** 0170

  User Response
  No action; information only.

- **806f030d-0409ffff : Hot Spare enabled for [ComputerSystemElementName]. (Drive 9)**

  This message is for the use case when an implementation has detected a Hot Spare has been Enabled.

  May also be shown as 806f030d0409ffff or 0x806f030d0409ffff

  Severity
  Info

  Serviceable
  No

  Automatically notify support
  No

  Alert Category
  System - Other

  SNMP Trap ID

  CIM Information
  Prefix: PLAT **ID:** 0170

User Response
No action; information only.

- **806f030d-040affff : Hot Spare enabled for [ComputerSystemElementName]. (Drive 10)**

This message is for the use case when an implementation has detected a Hot Spare has been Enabled.

May also be shown as 806f030d040affff or 0x806f030d040affff

Severity
Info

Serviceable
No

Automatically notify support
No

Alert Category
System - Other

SNMP Trap ID

CIM Information
Prefix: PLAT **ID:** 0170

User Response
No action; information only.

- **806f030d-040bffff : Hot Spare enabled for [ComputerSystemElementName]. (Drive 11)**

This message is for the use case when an implementation has detected a Hot Spare has been Enabled.

May also be shown as 806f030d040bffff or 0x806f030d040bffff

Severity
Info

Serviceable
No

Automatically notify support
No

Alert Category
System - Other

SNMP Trap ID

CIM Information
Prefix: PLAT **ID:** 0170

User Response
No action; information only.

- **806f030d-040cffff : Hot Spare enabled for [ComputerSystemElementName]. (Drive 12)**

This message is for the use case when an implementation has detected a Hot Spare has been Enabled.

May also be shown as 806f030d040cffff or 0x806f030d040cffff

Severity

Info

Serviceable
No

Automatically notify support
No

Alert Category
System - Other

SNMP Trap ID

CIM Information
Prefix: PLAT **ID:** 0170

User Response
No action; information only.

- **806f030d-040dffff : Hot Spare enabled for [ComputerSystemElementName]. (Drive 13)**

  This message is for the use case when an implementation has detected a Hot Spare has been Enabled.

  May also be shown as 806f030d040dffff or 0x806f030d040dffff

  Severity
  Info

  Serviceable
  No

  Automatically notify support
  No

  Alert Category
  System - Other

  SNMP Trap ID

  CIM Information
  Prefix: PLAT **ID:** 0170

  User Response
  No action; information only.

- **806f030d-0410ffff : Hot Spare enabled for [ComputerSystemElementName]. (Ext Drive)**

  This message is for the use case when an implementation has detected a Hot Spare has been Enabled.

  May also be shown as 806f030d0410ffff or 0x806f030d0410ffff

  Severity
  Info

  Serviceable
  No

  Automatically notify support
  No

  Alert Category
  System - Other

SNMP Trap ID

CIM Information
Prefix: PLAT **ID:** 0170

User Response
No action; information only.

- **806f0313-1701ffff : A software NMI has occurred on system [ComputerSystemElementName]. (NMI State)**

This message is for the use case when an implementation has detected a Software NMI.

May also be shown as 806f03131701ffff or 0x806f03131701ffff

Severity
Error

Serviceable
Yes

Automatically notify support
No

Alert Category
Critical - Other

SNMP Trap ID
50

CIM Information
Prefix: PLAT **ID:** 0228

User Response

1. Check the device driver.
2. Reinstall the device driver.
3. Update all device drivers to the latest level.
4. Update the firmware (UEFI and IMM).

- **806f0323-2101ffff : Power cycle of system [ComputerSystemElementName] initiated by watchdog [WatchdogElementName]. (IPMI Watchdog)**

This message is for the use case when an implementation has detected a Power Cycle by Watchdog occurred.

May also be shown as 806f03232101ffff or 0x806f03232101ffff

Severity
Info

Serviceable
No

Automatically notify support
No

Alert Category
System - Other

SNMP Trap ID

CIM Information
Prefix: PLAT **ID:** 0374

User Response
No action; information only.

- **806f040c-2001ffff : [PhysicalMemoryElementName] Disabled on Subsystem [MemoryElementName]. (DIMM 1)**

This message is for the use case when an implementation has detected that Memory has been Disabled.

May also be shown as 806f040c2001ffff or 0x806f040c2001ffff

Severity
Info

Serviceable
No

Automatically notify support
No

Alert Category
System - Other

SNMP Trap ID

CIM Information
Prefix: PLAT **ID:** 0131

User Response

1. Make sure the DIMM is installed correctly.
2. If the DIMM was disabled because of a memory fault (memory uncorrectable error or memory logging limit reached), follow the suggested actions for that error event and restart the server.
3. Check the Lenovo support website for an applicable retain tip or firmware update that applies to this memory event. If no memory fault is recorded in the logs and no DIMM connector error LED is lit, you can re-enable the DIMM through the Setup utility or the ToolsCenter Suite CLI.

- **806f040c-2002ffff : [PhysicalMemoryElementName] Disabled on Subsystem [MemoryElementName]. (DIMM 2)**

This message is for the use case when an implementation has detected that Memory has been Disabled.

May also be shown as 806f040c2002ffff or 0x806f040c2002ffff

Severity
Info

Serviceable
No

Automatically notify support
No

Alert Category
System - Other

SNMP Trap ID

CIM Information

Prefix: PLAT **ID:** 0131

User Response

1. Make sure the DIMM is installed correctly.
2. If the DIMM was disabled because of a memory fault (memory uncorrectable error or memory logging limit reached), follow the suggested actions for that error event and restart the server.
3. Check the Lenovo support website for an applicable retain tip or firmware update that applies to this memory event. If no memory fault is recorded in the logs and no DIMM connector error LED is lit, you can re-enable the DIMM through the Setup utility or the ToolsCenter Suite CLI.

- **806f040c-2003ffff : [PhysicalMemoryElementName] Disabled on Subsystem [MemoryElementName]. (DIMM 3)**

This message is for the use case when an implementation has detected that Memory has been Disabled.

May also be shown as 806f040c2003ffff or 0x806f040c2003ffff

Severity
Info

Serviceable
No

Automatically notify support
No

Alert Category
System - Other

SNMP Trap ID

CIM Information
Prefix: PLAT **ID:** 0131

User Response

1. Make sure the DIMM is installed correctly.
2. If the DIMM was disabled because of a memory fault (memory uncorrectable error or memory logging limit reached), follow the suggested actions for that error event and restart the server.
3. Check the Lenovo support website for an applicable retain tip or firmware update that applies to this memory event. If no memory fault is recorded in the logs and no DIMM connector error LED is lit, you can re-enable the DIMM through the Setup utility or the ToolsCenter Suite CLI.

- **806f040c-2004ffff : [PhysicalMemoryElementName] Disabled on Subsystem [MemoryElementName]. (DIMM 4)**

This message is for the use case when an implementation has detected that Memory has been Disabled.

May also be shown as 806f040c2004ffff or 0x806f040c2004ffff

Severity
Info

Serviceable
No

Automatically notify support
No

Alert Category

System - Other

SNMP Trap ID

CIM Information
Prefix: PLAT **ID:** 0131

User Response

1. Make sure the DIMM is installed correctly.
2. If the DIMM was disabled because of a memory fault (memory uncorrectable error or memory logging limit reached), follow the suggested actions for that error event and restart the server.
3. Check the Lenovo support website for an applicable retain tip or firmware update that applies to this memory event. If no memory fault is recorded in the logs and no DIMM connector error LED is lit, you can re-enable the DIMM through the Setup utility or the ToolsCenter Suite CLI.

- **806f040c-2005ffff : [PhysicalMemoryElementName] Disabled on Subsystem [MemoryElementName]. (DIMM 5)**

This message is for the use case when an implementation has detected that Memory has been Disabled.

May also be shown as 806f040c2005ffff or 0x806f040c2005ffff

Severity
Info

Serviceable
No

Automatically notify support
No

Alert Category
System - Other

SNMP Trap ID

CIM Information
Prefix: PLAT **ID:** 0131

User Response

1. Make sure the DIMM is installed correctly.
2. If the DIMM was disabled because of a memory fault (memory uncorrectable error or memory logging limit reached), follow the suggested actions for that error event and restart the server.
3. Check the Lenovo support website for an applicable retain tip or firmware update that applies to this memory event. If no memory fault is recorded in the logs and no DIMM connector error LED is lit, you can re-enable the DIMM through the Setup utility or the ToolsCenter Suite CLI.

- **806f040c-2006ffff : [PhysicalMemoryElementName] Disabled on Subsystem [MemoryElementName]. (DIMM 6)**

This message is for the use case when an implementation has detected that Memory has been Disabled.

May also be shown as 806f040c2006ffff or 0x806f040c2006ffff

Severity
Info

Serviceable

No

Automatically notify support
No

Alert Category
System - Other

SNMP Trap ID

CIM Information
Prefix: PLAT **ID:** 0131

User Response

1. Make sure the DIMM is installed correctly.
2. If the DIMM was disabled because of a memory fault (memory uncorrectable error or memory logging limit reached), follow the suggested actions for that error event and restart the server.
3. Check the Lenovo support website for an applicable retain tip or firmware update that applies to this memory event. If no memory fault is recorded in the logs and no DIMM connector error LED is lit, you can re-enable the DIMM through the Setup utility or the ToolsCenter Suite CLI.

- **806f040c-2007ffff : [PhysicalMemoryElementName] Disabled on Subsystem [MemoryElementName]. (DIMM 7)**

This message is for the use case when an implementation has detected that Memory has been Disabled.

May also be shown as 806f040c2007ffff or 0x806f040c2007ffff

Severity
Info

Serviceable
No

Automatically notify support
No

Alert Category
System - Other

SNMP Trap ID

CIM Information
Prefix: PLAT **ID:** 0131

User Response

1. Make sure the DIMM is installed correctly.
2. If the DIMM was disabled because of a memory fault (memory uncorrectable error or memory logging limit reached), follow the suggested actions for that error event and restart the server.
3. Check the Lenovo support website for an applicable retain tip or firmware update that applies to this memory event. If no memory fault is recorded in the logs and no DIMM connector error LED is lit, you can re-enable the DIMM through the Setup utility or the ToolsCenter Suite CLI.

- **806f040c-2008ffff : [PhysicalMemoryElementName] Disabled on Subsystem [MemoryElementName]. (DIMM 8)**

This message is for the use case when an implementation has detected that Memory has been Disabled.

May also be shown as 806f040c2008ffff or 0x806f040c2008ffff

Severity
Info

Serviceable
No

Automatically notify support
No

Alert Category
System - Other

SNMP Trap ID

CIM Information
Prefix: PLAT **ID:** 0131

User Response

1. Make sure the DIMM is installed correctly.
2. If the DIMM was disabled because of a memory fault (memory uncorrectable error or memory logging limit reached), follow the suggested actions for that error event and restart the server.
3. Check the Lenovo support website for an applicable retain tip or firmware update that applies to this memory event. If no memory fault is recorded in the logs and no DIMM connector error LED is lit, you can re-enable the DIMM through the Setup utility or the ToolsCenter Suite CLI.

- **806f040c-2009ffff : [PhysicalMemoryElementName] Disabled on Subsystem [MemoryElementName]. (DIMM 9)**

This message is for the use case when an implementation has detected that Memory has been Disabled.

May also be shown as 806f040c2009ffff or 0x806f040c2009ffff

Severity
Info

Serviceable
No

Automatically notify support
No

Alert Category
System - Other

SNMP Trap ID

CIM Information
Prefix: PLAT **ID:** 0131

User Response

1. Make sure the DIMM is installed correctly.
2. If the DIMM was disabled because of a memory fault (memory uncorrectable error or memory logging limit reached), follow the suggested actions for that error event and restart the server.
3. Check the Lenovo support website for an applicable retain tip or firmware update that applies to this memory event. If no memory fault is recorded in the logs and no DIMM connector error LED is lit, you can re-enable the DIMM through the Setup utility or the ToolsCenter Suite CLI.

- **806f040c-200affff : [PhysicalMemoryElementName] Disabled on Subsystem [MemoryElementName]. (DIMM 10)**

  This message is for the use case when an implementation has detected that Memory has been Disabled.

  May also be shown as 806f040c200affff or 0x806f040c200affff

  Severity
  Info

  Serviceable
  No

  Automatically notify support
  No

  Alert Category
  System - Other

  SNMP Trap ID

  CIM Information
  Prefix: PLAT **ID:** 0131

  User Response

  1. Make sure the DIMM is installed correctly.
  2. If the DIMM was disabled because of a memory fault (memory uncorrectable error or memory logging limit reached), follow the suggested actions for that error event and restart the server.
  3. Check the Lenovo support website for an applicable retain tip or firmware update that applies to this memory event. If no memory fault is recorded in the logs and no DIMM connector error LED is lit, you can re-enable the DIMM through the Setup utility or the ToolsCenter Suite CLI.

- **806f040c-200bffff : [PhysicalMemoryElementName] Disabled on Subsystem [MemoryElementName]. (DIMM 11)**

  This message is for the use case when an implementation has detected that Memory has been Disabled.

  May also be shown as 806f040c200bffff or 0x806f040c200bffff

  Severity
  Info

  Serviceable
  No

  Automatically notify support
  No

  Alert Category
  System - Other

  SNMP Trap ID

  CIM Information
  Prefix: PLAT **ID:** 0131

  User Response

  1. Make sure the DIMM is installed correctly.

2. If the DIMM was disabled because of a memory fault (memory uncorrectable error or memory logging limit reached), follow the suggested actions for that error event and restart the server.
3. Check the Lenovo support website for an applicable retain tip or firmware update that applies to this memory event. If no memory fault is recorded in the logs and no DIMM connector error LED is lit, you can re-enable the DIMM through the Setup utility or the ToolsCenter Suite CLI.

- **806f040c-200cffff : [PhysicalMemoryElementName] Disabled on Subsystem [MemoryElementName]. (DIMM 12)**

  This message is for the use case when an implementation has detected that Memory has been Disabled.

  May also be shown as 806f040c200cffff or 0x806f040c200cffff

  Severity
  Info

  Serviceable
  No

  Automatically notify support
  No

  Alert Category
  System - Other

  SNMP Trap ID

  CIM Information
  Prefix: PLAT **ID:** 0131

  User Response

  1. Make sure the DIMM is installed correctly.
  2. If the DIMM was disabled because of a memory fault (memory uncorrectable error or memory logging limit reached), follow the suggested actions for that error event and restart the server.
  3. Check the Lenovo support website for an applicable retain tip or firmware update that applies to this memory event. If no memory fault is recorded in the logs and no DIMM connector error LED is lit, you can re-enable the DIMM through the Setup utility or the ToolsCenter Suite CLI.

- **806f040c-200dffff : [PhysicalMemoryElementName] Disabled on Subsystem [MemoryElementName]. (DIMM 13)**

  This message is for the use case when an implementation has detected that Memory has been Disabled.

  May also be shown as 806f040c200dffff or 0x806f040c200dffff

  Severity
  Info

  Serviceable
  No

  Automatically notify support
  No

  Alert Category
  System - Other

  SNMP Trap ID

CIM Information
Prefix: PLAT **ID:** 0131

User Response

1. Make sure the DIMM is installed correctly.
2. If the DIMM was disabled because of a memory fault (memory uncorrectable error or memory logging limit reached), follow the suggested actions for that error event and restart the server.
3. Check the Lenovo support website for an applicable retain tip or firmware update that applies to this memory event. If no memory fault is recorded in the logs and no DIMM connector error LED is lit, you can re-enable the DIMM through the Setup utility or the ToolsCenter Suite CLI.

- **806f040c-200effff : [PhysicalMemoryElementName] Disabled on Subsystem [MemoryElementName]. (DIMM 14)**

This message is for the use case when an implementation has detected that Memory has been Disabled.

May also be shown as 806f040c200effff or 0x806f040c200effff

Severity
Info

Serviceable
No

Automatically notify support
No

Alert Category
System - Other

SNMP Trap ID

CIM Information
Prefix: PLAT **ID:** 0131

User Response

1. Make sure the DIMM is installed correctly.
2. If the DIMM was disabled because of a memory fault (memory uncorrectable error or memory logging limit reached), follow the suggested actions for that error event and restart the server.
3. Check the Lenovo support website for an applicable retain tip or firmware update that applies to this memory event. If no memory fault is recorded in the logs and no DIMM connector error LED is lit, you can re-enable the DIMM through the Setup utility or the ToolsCenter Suite CLI.

- **806f040c-200fffff : [PhysicalMemoryElementName] Disabled on Subsystem [MemoryElementName]. (DIMM 15)**

This message is for the use case when an implementation has detected that Memory has been Disabled.

May also be shown as 806f040c200fffff or 0x806f040c200fffff

Severity
Info

Serviceable
No

Automatically notify support
No

Alert Category
System - Other

SNMP Trap ID

CIM Information
Prefix: PLAT **ID:** 0131

User Response

1. Make sure the DIMM is installed correctly.
2. If the DIMM was disabled because of a memory fault (memory uncorrectable error or memory logging limit reached), follow the suggested actions for that error event and restart the server.
3. Check the Lenovo support website for an applicable retain tip or firmware update that applies to this memory event. If no memory fault is recorded in the logs and no DIMM connector error LED is lit, you can re-enable the DIMM through the Setup utility or the ToolsCenter Suite CLI.

- **806f040c-2010ffff : [PhysicalMemoryElementName] Disabled on Subsystem [MemoryElementName]. (DIMM 16)**

This message is for the use case when an implementation has detected that Memory has been Disabled.

May also be shown as 806f040c2010ffff or 0x806f040c2010ffff

Severity
Info

Serviceable
No

Automatically notify support
No

Alert Category
System - Other

SNMP Trap ID

CIM Information
Prefix: PLAT **ID:** 0131

User Response

1. Make sure the DIMM is installed correctly.
2. If the DIMM was disabled because of a memory fault (memory uncorrectable error or memory logging limit reached), follow the suggested actions for that error event and restart the server.
3. Check the Lenovo support website for an applicable retain tip or firmware update that applies to this memory event. If no memory fault is recorded in the logs and no DIMM connector error LED is lit, you can re-enable the DIMM through the Setup utility or the ToolsCenter Suite CLI.

- **806f040c-2011ffff : [PhysicalMemoryElementName] Disabled on Subsystem [MemoryElementName]. (DIMM 17)**

This message is for the use case when an implementation has detected that Memory has been Disabled.

May also be shown as 806f040c2011ffff or 0x806f040c2011ffff

Severity
Info

Serviceable
No

Automatically notify support
No

Alert Category
System - Other

SNMP Trap ID

CIM Information
Prefix: PLAT **ID:** 0131

User Response

1. Make sure the DIMM is installed correctly.
2. If the DIMM was disabled because of a memory fault (memory uncorrectable error or memory logging limit reached), follow the suggested actions for that error event and restart the server.
3. Check the Lenovo support website for an applicable retain tip or firmware update that applies to this memory event. If no memory fault is recorded in the logs and no DIMM connector error LED is lit, you can re-enable the DIMM through the Setup utility or the ToolsCenter Suite CLI.

- **806f040c-2012ffff : [PhysicalMemoryElementName] Disabled on Subsystem [MemoryElementName]. (DIMM 18)**

This message is for the use case when an implementation has detected that Memory has been Disabled.

May also be shown as 806f040c2012ffff or 0x806f040c2012ffff

Severity
Info

Serviceable
No

Automatically notify support
No

Alert Category
System - Other

SNMP Trap ID

CIM Information
Prefix: PLAT **ID:** 0131

User Response

1. Make sure the DIMM is installed correctly.
2. If the DIMM was disabled because of a memory fault (memory uncorrectable error or memory logging limit reached), follow the suggested actions for that error event and restart the server.
3. Check the Lenovo support website for an applicable retain tip or firmware update that applies to this memory event. If no memory fault is recorded in the logs and no DIMM connector error LED is lit, you can re-enable the DIMM through the Setup utility or the ToolsCenter Suite CLI.

- **806f040c-2013ffff : [PhysicalMemoryElementName] Disabled on Subsystem [MemoryElementName]. (DIMM 19)**

This message is for the use case when an implementation has detected that Memory has been Disabled.

May also be shown as 806f040c2013ffff or 0x806f040c2013ffff

Severity
Info

Serviceable
No

Automatically notify support
No

Alert Category
System - Other

SNMP Trap ID

CIM Information
Prefix: PLAT **ID:** 0131

User Response

1. Make sure the DIMM is installed correctly.
2. If the DIMM was disabled because of a memory fault (memory uncorrectable error or memory logging limit reached), follow the suggested actions for that error event and restart the server.
3. Check the Lenovo support website for an applicable retain tip or firmware update that applies to this memory event. If no memory fault is recorded in the logs and no DIMM connector error LED is lit, you can re-enable the DIMM through the Setup utility or the ToolsCenter Suite CLI.

- **806f040c-2014ffff : [PhysicalMemoryElementName] Disabled on Subsystem [MemoryElementName]. (DIMM 20)**

This message is for the use case when an implementation has detected that Memory has been Disabled.

May also be shown as 806f040c2014ffff or 0x806f040c2014ffff

Severity
Info

Serviceable
No

Automatically notify support
No

Alert Category
System - Other

SNMP Trap ID

CIM Information
Prefix: PLAT **ID:** 0131

User Response

1. Make sure the DIMM is installed correctly.
2. If the DIMM was disabled because of a memory fault (memory uncorrectable error or memory logging limit reached), follow the suggested actions for that error event and restart the server.
3. Check the Lenovo support website for an applicable retain tip or firmware update that applies to this memory event. If no memory fault is recorded in the logs and no DIMM connector error LED is lit, you can re-enable the DIMM through the Setup utility or the ToolsCenter Suite CLI.

- **806f040c-2015ffff : [PhysicalMemoryElementName] Disabled on Subsystem [MemoryElementName]. (DIMM 21)**

  This message is for the use case when an implementation has detected that Memory has been Disabled.

  May also be shown as 806f040c2015ffff or 0x806f040c2015ffff

  Severity
  Info

  Serviceable
  No

  Automatically notify support
  No

  Alert Category
  System - Other

  SNMP Trap ID

  CIM Information
  Prefix: PLAT **ID:** 0131

  User Response

  1. Make sure the DIMM is installed correctly.
  2. If the DIMM was disabled because of a memory fault (memory uncorrectable error or memory logging limit reached), follow the suggested actions for that error event and restart the server.
  3. Check the Lenovo support website for an applicable retain tip or firmware update that applies to this memory event. If no memory fault is recorded in the logs and no DIMM connector error LED is lit, you can re-enable the DIMM through the Setup utility or the ToolsCenter Suite CLI.

- **806f040c-2016ffff : [PhysicalMemoryElementName] Disabled on Subsystem [MemoryElementName]. (DIMM 22)**

  This message is for the use case when an implementation has detected that Memory has been Disabled.

  May also be shown as 806f040c2016ffff or 0x806f040c2016ffff

  Severity
  Info

  Serviceable
  No

  Automatically notify support
  No

  Alert Category
  System - Other

  SNMP Trap ID

  CIM Information
  Prefix: PLAT **ID:** 0131

  User Response

  1. Make sure the DIMM is installed correctly.

2. If the DIMM was disabled because of a memory fault (memory uncorrectable error or memory logging limit reached), follow the suggested actions for that error event and restart the server.
3. Check the Lenovo support website for an applicable retain tip or firmware update that applies to this memory event. If no memory fault is recorded in the logs and no DIMM connector error LED is lit, you can re-enable the DIMM through the Setup utility or the ToolsCenter Suite CLI.

- **806f040c-2017ffff : [PhysicalMemoryElementName] Disabled on Subsystem [MemoryElementName]. (DIMM 23)**

  This message is for the use case when an implementation has detected that Memory has been Disabled.

  May also be shown as 806f040c2017ffff or 0x806f040c2017ffff

  Severity
  Info

  Serviceable
  No

  Automatically notify support
  No

  Alert Category
  System - Other

  SNMP Trap ID

  CIM Information
  Prefix: PLAT **ID:** 0131

  User Response

  1. Make sure the DIMM is installed correctly.
  2. If the DIMM was disabled because of a memory fault (memory uncorrectable error or memory logging limit reached), follow the suggested actions for that error event and restart the server.
  3. Check the Lenovo support website for an applicable retain tip or firmware update that applies to this memory event. If no memory fault is recorded in the logs and no DIMM connector error LED is lit, you can re-enable the DIMM through the Setup utility or the ToolsCenter Suite CLI.

- **806f040c-2018ffff : [PhysicalMemoryElementName] Disabled on Subsystem [MemoryElementName]. (DIMM 24)**

  This message is for the use case when an implementation has detected that Memory has been Disabled.

  May also be shown as 806f040c2018ffff or 0x806f040c2018ffff

  Severity
  Info

  Serviceable
  No

  Automatically notify support
  No

  Alert Category
  System - Other

  SNMP Trap ID

CIM Information
Prefix: PLAT **ID:** 0131

User Response

1. Make sure the DIMM is installed correctly.
2. If the DIMM was disabled because of a memory fault (memory uncorrectable error or memory logging limit reached), follow the suggested actions for that error event and restart the server.
3. Check the Lenovo support website for an applicable retain tip or firmware update that applies to this memory event. If no memory fault is recorded in the logs and no DIMM connector error LED is lit, you can re-enable the DIMM through the Setup utility or the ToolsCenter Suite CLI.

- **806f040c-2581ffff : [PhysicalMemoryElementName] Disabled on Subsystem [MemoryElementName]. (All DIMMS)**

This message is for the use case when an implementation has detected that Memory has been Disabled.

May also be shown as 806f040c2581ffff or 0x806f040c2581ffff

Severity
Info

Serviceable
No

Automatically notify support
No

Alert Category
System - Other

SNMP Trap ID

CIM Information
Prefix: PLAT **ID:** 0131

User Response

1. Make sure the DIMM is installed correctly.
2. If the DIMM was disabled because of a memory fault (memory uncorrectable error or memory logging limit reached), follow the suggested actions for that error event and restart the server.
3. Check the Lenovo support website for an applicable retain tip or firmware update that applies to this memory event. If no memory fault is recorded in the logs and no DIMM connector error LED is lit, you can re-enable the DIMM through the Setup utility or the ToolsCenter Suite CLI.

One of the DIMMs :

- **806f0413-2582ffff : A PCI PERR has occurred on system [ComputerSystemElementName]. (PCIs)**

This message is for the use case when an implementation has detected a PCI PERR.

May also be shown as 806f04132582ffff or 0x806f04132582ffff

Severity
Error

Serviceable
Yes

Automatically notify support
No

Alert Category
Critical - Other

SNMP Trap ID
50

CIM Information
Prefix: PLAT **ID:** 0232

User Response

1. Check the PCI LED.
2. Reseat the affected adapters and riser cards.
3. Update the server firmware (UEFI and IMM) and adapter firmware. Important: Some cluster solutions require specific code levels or coordinated code updates. If the device is part of a cluster solution, verify that the latest level of code is supported for the cluster solution before you update the code.
4. Remove both adapters.
5. Replace the PCIe adapters.
6. Replace the riser card.

- **806f0507-0301ffff : [ProcessorElementName] has a Configuration Mismatch. (CPU 1)**

This message is for the use case when an implementation has detected a Processor Configuration Mismatch has occurred.

May also be shown as 806f05070301ffff or 0x806f05070301ffff

Severity
Error

Serviceable
Yes

Automatically notify support
No

Alert Category
Critical - CPU

SNMP Trap ID
40

CIM Information
Prefix: PLAT **ID:** 0062

User Response

1. Check the CPU LED. See more information about the CPU LED in Light path diagnostics.
2. Check for a server firmware update. Important: Some cluster solutions require specific code levels or coordinated code updates. If the device is part of a cluster solution, verify that the latest level of code is supported for the cluster solution before you update the code.
3. Make sure that the installed microprocessors are compatible with each other.
4. (Trained technician only) Reseat microprocessor n.
5. (Trained technician only) Replace microprocessor n. (n = microprocessor number)

- **806f0507-0302ffff : [ProcessorElementName] has a Configuration Mismatch. (CPU 2)**

This message is for the use case when an implementation has detected a Processor Configuration Mismatch has occurred.

May also be shown as 806f05070302ffff or 0x806f05070302ffff

Severity
Error

Serviceable
Yes

Automatically notify support
No

Alert Category
Critical - CPU

SNMP Trap ID
40

CIM Information
Prefix: PLAT **ID:** 0062

User Response

1. Check the CPU LED. See more information about the CPU LED in Light path diagnostics.
2. Check for a server firmware update. Important: Some cluster solutions require specific code levels or coordinated code updates. If the device is part of a cluster solution, verify that the latest level of code is supported for the cluster solution before you update the code.
3. Make sure that the installed microprocessors are compatible with each other.
4. (Trained technician only) Reseat microprocessor n.
5. (Trained technician only) Replace microprocessor n. (n = microprocessor number)

- **806f0507-2584ffff : [ProcessorElementName] has a Configuration Mismatch. (All CPUs)**

This message is for the use case when an implementation has detected a Processor Configuration Mismatch has occurred.

May also be shown as 806f05072584ffff or 0x806f05072584ffff

Severity
Error

Serviceable
Yes

Automatically notify support
No

Alert Category
Critical - CPU

SNMP Trap ID
40

CIM Information
Prefix: PLAT **ID:** 0062

User Response

1. Check the CPU LED. See more information about the CPU LED in Light path diagnostics.

2. Check for a server firmware update. Important: Some cluster solutions require specific code levels or coordinated code updates. If the device is part of a cluster solution, verify that the latest level of code is supported for the cluster solution before you update the code.
3. Make sure that the installed microprocessors are compatible with each other.
4. (Trained technician only) Reseat microprocessor n.
5. (Trained technician only) Replace microprocessor n. (n = microprocessor number)

One of the CPUs :

- **806f050c-2001ffff : Memory Logging Limit Reached for [PhysicalMemoryElementName] on Subsystem [MemoryElementName]. (DIMM 1)**

  This message is for the use case when an implementation has detected that the Memory Logging Limit has been Reached.

  May also be shown as 806f050c2001ffff or 0x806f050c2001ffff

  Severity
  Warning

  Serviceable
  Yes

  Automatically notify support
  Yes

  Alert Category
  Warning - Memory

  SNMP Trap ID
  43

  CIM Information
  Prefix: PLAT **ID:** 0144

  User Response
  Note: Each time you install or remove a DIMM, you must disconnect the server from the power source; then, wait 10 seconds before restarting the server.

  1. Refer to TIP H212293 for minimum code level.
  2. Check the Lenovo support website for an applicable retain tip or firmware update that applies to this memory error.
  3. Swap the affected DIMMs (as indicated by the error LEDs on the system board or the event logs) to a different memory channel or microprocessor.
  4. If the error still occurs on the same DIMM, replace the affected DIMM.
  5. (Trained technician only) If the problem occurs on the same DIMM connector, check the DIMM connector. If the connector contains any foreign material or is damaged, replace the system board.
  6. (Trained technician only) Remove the affected microprocessor and check the microprocessor socket pins for any damaged pins. If damage is found, replace the system board.
  7. (Trained technician only) Replace the affected microprocessor.

- **806f050c-2002ffff : Memory Logging Limit Reached for [PhysicalMemoryElementName] on Subsystem [MemoryElementName]. (DIMM 2)**

  This message is for the use case when an implementation has detected that the Memory Logging Limit has been Reached.

May also be shown as 806f050c2002ffff or 0x806f050c2002ffff

Severity
Warning

Serviceable
Yes

Automatically notify support
Yes

Alert Category
Warning - Memory

SNMP Trap ID
43

CIM Information
Prefix: PLAT **ID:** 0144

User Response
Note: Each time you install or remove a DIMM, you must disconnect the server from the power source; then, wait 10 seconds before restarting the server.

1. Refer to TIP H212293 for minimum code level.
2. Check the Lenovo support website for an applicable retain tip or firmware update that applies to this memory error.
3. Swap the affected DIMMs (as indicated by the error LEDs on the system board or the event logs) to a different memory channel or microprocessor.
4. If the error still occurs on the same DIMM, replace the affected DIMM.
5. (Trained technician only) If the problem occurs on the same DIMM connector, check the DIMM connector. If the connector contains any foreign material or is damaged, replace the system board.
6. (Trained technician only) Remove the affected microprocessor and check the microprocessor socket pins for any damaged pins. If damage is found, replace the system board.
7. (Trained technician only) Replace the affected microprocessor.

- **806f050c-2003ffff : Memory Logging Limit Reached for [PhysicalMemoryElementName] on Subsystem [MemoryElementName]. (DIMM 3)**

This message is for the use case when an implementation has detected that the Memory Logging Limit has been Reached.

May also be shown as 806f050c2003ffff or 0x806f050c2003ffff

Severity
Warning

Serviceable
Yes

Automatically notify support
Yes

Alert Category
Warning - Memory

SNMP Trap ID
43

CIM Information
Prefix: PLAT **ID:** 0144

User Response
Note: Each time you install or remove a DIMM, you must disconnect the server from the power source; then, wait 10 seconds before restarting the server.

1. Refer to TIP H212293 for minimum code level.
2. Check the Lenovo support website for an applicable retain tip or firmware update that applies to this memory error.
3. Swap the affected DIMMs (as indicated by the error LEDs on the system board or the event logs) to a different memory channel or microprocessor.
4. If the error still occurs on the same DIMM, replace the affected DIMM.
5. (Trained technician only) If the problem occurs on the same DIMM connector, check the DIMM connector. If the connector contains any foreign material or is damaged, replace the system board.
6. (Trained technician only) Remove the affected microprocessor and check the microprocessor socket pins for any damaged pins. If damage is found, replace the system board.
7. (Trained technician only) Replace the affected microprocessor.

- **806f050c-2004ffff : Memory Logging Limit Reached for [PhysicalMemoryElementName] on Subsystem [MemoryElementName]. (DIMM 4)**

This message is for the use case when an implementation has detected that the Memory Logging Limit has been Reached.

May also be shown as 806f050c2004ffff or 0x806f050c2004ffff

Severity
Warning

Serviceable
Yes

Automatically notify support
Yes

Alert Category
Warning - Memory

SNMP Trap ID
43

CIM Information
Prefix: PLAT **ID:** 0144

User Response
Note: Each time you install or remove a DIMM, you must disconnect the server from the power source; then, wait 10 seconds before restarting the server.

1. Refer to TIP H212293 for minimum code level.
2. Check the Lenovo support website for an applicable retain tip or firmware update that applies to this memory error.
3. Swap the affected DIMMs (as indicated by the error LEDs on the system board or the event logs) to a different memory channel or microprocessor.
4. If the error still occurs on the same DIMM, replace the affected DIMM.

5. (Trained technician only) If the problem occurs on the same DIMM connector, check the DIMM connector. If the connector contains any foreign material or is damaged, replace the system board.
6. (Trained technician only) Remove the affected microprocessor and check the microprocessor socket pins for any damaged pins. If damage is found, replace the system board.
7. (Trained technician only) Replace the affected microprocessor.

- **806f050c-2005ffff : Memory Logging Limit Reached for [PhysicalMemoryElementName] on Subsystem [MemoryElementName]. (DIMM 5)**

  This message is for the use case when an implementation has detected that the Memory Logging Limit has been Reached.

  May also be shown as 806f050c2005ffff or 0x806f050c2005ffff

  Severity
  Warning

  Serviceable
  Yes

  Automatically notify support
  Yes

  Alert Category
  Warning - Memory

  SNMP Trap ID
  43

  CIM Information
  Prefix: PLAT **ID:** 0144

  User Response
  Note: Each time you install or remove a DIMM, you must disconnect the server from the power source; then, wait 10 seconds before restarting the server.

  1. Refer to TIP H212293 for minimum code level.
  2. Check the Lenovo support website for an applicable retain tip or firmware update that applies to this memory error.
  3. Swap the affected DIMMs (as indicated by the error LEDs on the system board or the event logs) to a different memory channel or microprocessor.
  4. If the error still occurs on the same DIMM, replace the affected DIMM.
  5. (Trained technician only) If the problem occurs on the same DIMM connector, check the DIMM connector. If the connector contains any foreign material or is damaged, replace the system board.
  6. (Trained technician only) Remove the affected microprocessor and check the microprocessor socket pins for any damaged pins. If damage is found, replace the system board.
  7. (Trained technician only) Replace the affected microprocessor.

- **806f050c-2006ffff : Memory Logging Limit Reached for [PhysicalMemoryElementName] on Subsystem [MemoryElementName]. (DIMM 6)**

  This message is for the use case when an implementation has detected that the Memory Logging Limit has been Reached.

  May also be shown as 806f050c2006ffff or 0x806f050c2006ffff

Severity
Warning

Serviceable
Yes

Automatically notify support
Yes

Alert Category
Warning - Memory

SNMP Trap ID
43

CIM Information
Prefix: PLAT **ID:** 0144

User Response
Note: Each time you install or remove a DIMM, you must disconnect the server from the power source; then, wait 10 seconds before restarting the server.

1. Refer to TIP H212293 for minimum code level.
2. Check the Lenovo support website for an applicable retain tip or firmware update that applies to this memory error.
3. Swap the affected DIMMs (as indicated by the error LEDs on the system board or the event logs) to a different memory channel or microprocessor.
4. If the error still occurs on the same DIMM, replace the affected DIMM.
5. (Trained technician only) If the problem occurs on the same DIMM connector, check the DIMM connector. If the connector contains any foreign material or is damaged, replace the system board.
6. (Trained technician only) Remove the affected microprocessor and check the microprocessor socket pins for any damaged pins. If damage is found, replace the system board.
7. (Trained technician only) Replace the affected microprocessor.

- **806f050c-2007ffff : Memory Logging Limit Reached for [PhysicalMemoryElementName] on Subsystem [MemoryElementName]. (DIMM 7)**

This message is for the use case when an implementation has detected that the Memory Logging Limit has been Reached.

May also be shown as 806f050c2007ffff or 0x806f050c2007ffff

Severity
Warning

Serviceable
Yes

Automatically notify support
Yes

Alert Category
Warning - Memory

SNMP Trap ID
43

CIM Information
Prefix: PLAT **ID:** 0144

User Response

Note: Each time you install or remove a DIMM, you must disconnect the server from the power source; then, wait 10 seconds before restarting the server.

1. Refer to TIP H212293 for minimum code level.
2. Check the Lenovo support website for an applicable retain tip or firmware update that applies to this memory error.
3. Swap the affected DIMMs (as indicated by the error LEDs on the system board or the event logs) to a different memory channel or microprocessor.
4. If the error still occurs on the same DIMM, replace the affected DIMM.
5. (Trained technician only) If the problem occurs on the same DIMM connector, check the DIMM connector. If the connector contains any foreign material or is damaged, replace the system board.
6. (Trained technician only) Remove the affected microprocessor and check the microprocessor socket pins for any damaged pins. If damage is found, replace the system board.
7. (Trained technician only) Replace the affected microprocessor.

- **806f050c-2008ffff : Memory Logging Limit Reached for [PhysicalMemoryElementName] on Subsystem [MemoryElementName]. (DIMM 8)**

This message is for the use case when an implementation has detected that the Memory Logging Limit has been Reached.

May also be shown as 806f050c2008ffff or 0x806f050c2008ffff

Severity

Warning

Serviceable

Yes

Automatically notify support

Yes

Alert Category

Warning - Memory

SNMP Trap ID

43

CIM Information

Prefix: PLAT **ID:** 0144

User Response

Note: Each time you install or remove a DIMM, you must disconnect the server from the power source; then, wait 10 seconds before restarting the server.

1. Refer to TIP H212293 for minimum code level.
2. Check the Lenovo support website for an applicable retain tip or firmware update that applies to this memory error.
3. Swap the affected DIMMs (as indicated by the error LEDs on the system board or the event logs) to a different memory channel or microprocessor.
4. If the error still occurs on the same DIMM, replace the affected DIMM.
5. (Trained technician only) If the problem occurs on the same DIMM connector, check the DIMM connector. If the connector contains any foreign material or is damaged, replace the system board.

6. (Trained technician only) Remove the affected microprocessor and check the microprocessor socket pins for any damaged pins. If damage is found, replace the system board.
7. (Trained technician only) Replace the affected microprocessor.

- **806f050c-2009ffff : Memory Logging Limit Reached for [PhysicalMemoryElementName] on Subsystem [MemoryElementName]. (DIMM 9)**

  This message is for the use case when an implementation has detected that the Memory Logging Limit has been Reached.

  May also be shown as 806f050c2009ffff or 0x806f050c2009ffff

  Severity
  Warning

  Serviceable
  Yes

  Automatically notify support
  Yes

  Alert Category
  Warning - Memory

  SNMP Trap ID
  43

  CIM Information
  Prefix: PLAT **ID:** 0144

  User Response
  Note: Each time you install or remove a DIMM, you must disconnect the server from the power source; then, wait 10 seconds before restarting the server.

  1. Refer to TIP H212293 for minimum code level.
  2. Check the Lenovo support website for an applicable retain tip or firmware update that applies to this memory error.
  3. Swap the affected DIMMs (as indicated by the error LEDs on the system board or the event logs) to a different memory channel or microprocessor.
  4. If the error still occurs on the same DIMM, replace the affected DIMM.
  5. (Trained technician only) If the problem occurs on the same DIMM connector, check the DIMM connector. If the connector contains any foreign material or is damaged, replace the system board.
  6. (Trained technician only) Remove the affected microprocessor and check the microprocessor socket pins for any damaged pins. If damage is found, replace the system board.
  7. (Trained technician only) Replace the affected microprocessor.

- **806f050c-200affff : Memory Logging Limit Reached for [PhysicalMemoryElementName] on Subsystem [MemoryElementName]. (DIMM 10)**

  This message is for the use case when an implementation has detected that the Memory Logging Limit has been Reached.

  May also be shown as 806f050c200affff or 0x806f050c200affff

  Severity
  Warning

  Serviceable

Yes

Automatically notify support
Yes

Alert Category
Warning - Memory

SNMP Trap ID
43

CIM Information
Prefix: PLAT **ID:** 0144

User Response
Note: Each time you install or remove a DIMM, you must disconnect the server from the power source; then, wait 10 seconds before restarting the server.

1. Refer to TIP H212293 for minimum code level.
2. Check the Lenovo support website for an applicable retain tip or firmware update that applies to this memory error.
3. Swap the affected DIMMs (as indicated by the error LEDs on the system board or the event logs) to a different memory channel or microprocessor.
4. If the error still occurs on the same DIMM, replace the affected DIMM.
5. (Trained technician only) If the problem occurs on the same DIMM connector, check the DIMM connector. If the connector contains any foreign material or is damaged, replace the system board.
6. (Trained technician only) Remove the affected microprocessor and check the microprocessor socket pins for any damaged pins. If damage is found, replace the system board.
7. (Trained technician only) Replace the affected microprocessor.

- **806f050c-200bffff : Memory Logging Limit Reached for [PhysicalMemoryElementName] on Subsystem [MemoryElementName]. (DIMM 11)**

This message is for the use case when an implementation has detected that the Memory Logging Limit has been Reached.

May also be shown as 806f050c200bffff or 0x806f050c200bffff

Severity
Warning

Serviceable
Yes

Automatically notify support
Yes

Alert Category
Warning - Memory

SNMP Trap ID
43

CIM Information
Prefix: PLAT **ID:** 0144

User Response
Note: Each time you install or remove a DIMM, you must disconnect the server from the power source; then, wait 10 seconds before restarting the server.

1. Refer to TIP H212293 for minimum code level.
2. Check the Lenovo support website for an applicable retain tip or firmware update that applies to this memory error.
3. Swap the affected DIMMs (as indicated by the error LEDs on the system board or the event logs) to a different memory channel or microprocessor.
4. If the error still occurs on the same DIMM, replace the affected DIMM.
5. (Trained technician only) If the problem occurs on the same DIMM connector, check the DIMM connector. If the connector contains any foreign material or is damaged, replace the system board.
6. (Trained technician only) Remove the affected microprocessor and check the microprocessor socket pins for any damaged pins. If damage is found, replace the system board.
7. (Trained technician only) Replace the affected microprocessor.

- **806f050c-200cffff : Memory Logging Limit Reached for [PhysicalMemoryElementName] on Subsystem [MemoryElementName]. (DIMM 12)**

  This message is for the use case when an implementation has detected that the Memory Logging Limit has been Reached.

  May also be shown as 806f050c200cffff or 0x806f050c200cffff

  Severity
  Warning

  Serviceable
  Yes

  Automatically notify support
  Yes

  Alert Category
  Warning - Memory

  SNMP Trap ID
  43

  CIM Information
  Prefix: PLAT **ID:** 0144

  User Response
  Note: Each time you install or remove a DIMM, you must disconnect the server from the power source; then, wait 10 seconds before restarting the server.

  1. Refer to TIP H212293 for minimum code level.
  2. Check the Lenovo support website for an applicable retain tip or firmware update that applies to this memory error.
  3. Swap the affected DIMMs (as indicated by the error LEDs on the system board or the event logs) to a different memory channel or microprocessor.
  4. If the error still occurs on the same DIMM, replace the affected DIMM.
  5. (Trained technician only) If the problem occurs on the same DIMM connector, check the DIMM connector. If the connector contains any foreign material or is damaged, replace the system board.
  6. (Trained technician only) Remove the affected microprocessor and check the microprocessor socket pins for any damaged pins. If damage is found, replace the system board.
  7. (Trained technician only) Replace the affected microprocessor.

- **806f050c-200dffff : Memory Logging Limit Reached for [PhysicalMemoryElementName] on Subsystem [MemoryElementName]. (DIMM 13)**

  This message is for the use case when an implementation has detected that the Memory Logging Limit has been Reached.

  May also be shown as 806f050c200dffff or 0x806f050c200dffff

  Severity
  Warning

  Serviceable
  Yes

  Automatically notify support
  Yes

  Alert Category
  Warning - Memory

  SNMP Trap ID
  43

  CIM Information
  Prefix: PLAT **ID:** 0144

  User Response
  Note: Each time you install or remove a DIMM, you must disconnect the server from the power source; then, wait 10 seconds before restarting the server.

  1. Refer to TIP H212293 for minimum code level.
  2. Check the Lenovo support website for an applicable retain tip or firmware update that applies to this memory error.
  3. Swap the affected DIMMs (as indicated by the error LEDs on the system board or the event logs) to a different memory channel or microprocessor.
  4. If the error still occurs on the same DIMM, replace the affected DIMM.
  5. (Trained technician only) If the problem occurs on the same DIMM connector, check the DIMM connector. If the connector contains any foreign material or is damaged, replace the system board.
  6. (Trained technician only) Remove the affected microprocessor and check the microprocessor socket pins for any damaged pins. If damage is found, replace the system board.
  7. (Trained technician only) Replace the affected microprocessor.

- **806f050c-200effff : Memory Logging Limit Reached for [PhysicalMemoryElementName] on Subsystem [MemoryElementName]. (DIMM 14)**

  This message is for the use case when an implementation has detected that the Memory Logging Limit has been Reached.

  May also be shown as 806f050c200effff or 0x806f050c200effff

  Severity
  Warning

  Serviceable
  Yes

  Automatically notify support
  Yes

Alert Category
Warning - Memory

SNMP Trap ID
43

CIM Information
Prefix: PLAT **ID:** 0144

User Response
Note: Each time you install or remove a DIMM, you must disconnect the server from the power source; then, wait 10 seconds before restarting the server.

1. Refer to TIP H212293 for minimum code level.
2. Check the Lenovo support website for an applicable retain tip or firmware update that applies to this memory error.
3. Swap the affected DIMMs (as indicated by the error LEDs on the system board or the event logs) to a different memory channel or microprocessor.
4. If the error still occurs on the same DIMM, replace the affected DIMM.
5. (Trained technician only) If the problem occurs on the same DIMM connector, check the DIMM connector. If the connector contains any foreign material or is damaged, replace the system board.
6. (Trained technician only) Remove the affected microprocessor and check the microprocessor socket pins for any damaged pins. If damage is found, replace the system board.
7. (Trained technician only) Replace the affected microprocessor.

- **806f050c-200fffff : Memory Logging Limit Reached for [PhysicalMemoryElementName] on Subsystem [MemoryElementName]. (DIMM 15)**

This message is for the use case when an implementation has detected that the Memory Logging Limit has been Reached.

May also be shown as 806f050c200fffff or 0x806f050c200fffff

Severity
Warning

Serviceable
Yes

Automatically notify support
Yes

Alert Category
Warning - Memory

SNMP Trap ID
43

CIM Information
Prefix: PLAT **ID:** 0144

User Response
Note: Each time you install or remove a DIMM, you must disconnect the server from the power source; then, wait 10 seconds before restarting the server.

1. Refer to TIP H212293 for minimum code level.
2. Check the Lenovo support website for an applicable retain tip or firmware update that applies to this memory error.

3. Swap the affected DIMMs (as indicated by the error LEDs on the system board or the event logs) to a different memory channel or microprocessor.
4. If the error still occurs on the same DIMM, replace the affected DIMM.
5. (Trained technician only) If the problem occurs on the same DIMM connector, check the DIMM connector. If the connector contains any foreign material or is damaged, replace the system board.
6. (Trained technician only) Remove the affected microprocessor and check the microprocessor socket pins for any damaged pins. If damage is found, replace the system board.
7. (Trained technician only) Replace the affected microprocessor.

- **806f050c-2010ffff : Memory Logging Limit Reached for [PhysicalMemoryElementName] on Subsystem [MemoryElementName]. (DIMM 16)**

  This message is for the use case when an implementation has detected that the Memory Logging Limit has been Reached.

  May also be shown as 806f050c2010ffff or 0x806f050c2010ffff

  Severity
  Warning

  Serviceable
  Yes

  Automatically notify support
  Yes

  Alert Category
  Warning - Memory

  SNMP Trap ID
  43

  CIM Information
  Prefix: PLAT **ID:** 0144

  User Response
  Note: Each time you install or remove a DIMM, you must disconnect the server from the power source; then, wait 10 seconds before restarting the server.

  1. Refer to TIP H212293 for minimum code level.
  2. Check the Lenovo support website for an applicable retain tip or firmware update that applies to this memory error.
  3. Swap the affected DIMMs (as indicated by the error LEDs on the system board or the event logs) to a different memory channel or microprocessor.
  4. If the error still occurs on the same DIMM, replace the affected DIMM.
  5. (Trained technician only) If the problem occurs on the same DIMM connector, check the DIMM connector. If the connector contains any foreign material or is damaged, replace the system board.
  6. (Trained technician only) Remove the affected microprocessor and check the microprocessor socket pins for any damaged pins. If damage is found, replace the system board.
  7. (Trained technician only) Replace the affected microprocessor.

- **806f050c-2011ffff : Memory Logging Limit Reached for [PhysicalMemoryElementName] on Subsystem [MemoryElementName]. (DIMM 17)**

This message is for the use case when an implementation has detected that the Memory Logging Limit has been Reached.

May also be shown as 806f050c2011ffff or 0x806f050c2011ffff

Severity
Warning

Serviceable
Yes

Automatically notify support
Yes

Alert Category
Warning - Memory

SNMP Trap ID
43

CIM Information
Prefix: PLAT **ID:** 0144

User Response
Note: Each time you install or remove a DIMM, you must disconnect the server from the power source; then, wait 10 seconds before restarting the server.

1. Refer to TIP H212293 for minimum code level.
2. Check the Lenovo support website for an applicable retain tip or firmware update that applies to this memory error.
3. Swap the affected DIMMs (as indicated by the error LEDs on the system board or the event logs) to a different memory channel or microprocessor.
4. If the error still occurs on the same DIMM, replace the affected DIMM.
5. (Trained technician only) If the problem occurs on the same DIMM connector, check the DIMM connector. If the connector contains any foreign material or is damaged, replace the system board.
6. (Trained technician only) Remove the affected microprocessor and check the microprocessor socket pins for any damaged pins. If damage is found, replace the system board.
7. (Trained technician only) Replace the affected microprocessor.

- **806f050c-2012ffff : Memory Logging Limit Reached for [PhysicalMemoryElementName] on Subsystem [MemoryElementName]. (DIMM 18)**

This message is for the use case when an implementation has detected that the Memory Logging Limit has been Reached.

May also be shown as 806f050c2012ffff or 0x806f050c2012ffff

Severity
Warning

Serviceable
Yes

Automatically notify support
Yes

Alert Category
Warning - Memory

SNMP Trap ID
43

CIM Information
Prefix: PLAT **ID:** 0144

User Response
Note: Each time you install or remove a DIMM, you must disconnect the server from the power source; then, wait 10 seconds before restarting the server.

1. Refer to TIP H212293 for minimum code level.
2. Check the Lenovo support website for an applicable retain tip or firmware update that applies to this memory error.
3. Swap the affected DIMMs (as indicated by the error LEDs on the system board or the event logs) to a different memory channel or microprocessor.
4. If the error still occurs on the same DIMM, replace the affected DIMM.
5. (Trained technician only) If the problem occurs on the same DIMM connector, check the DIMM connector. If the connector contains any foreign material or is damaged, replace the system board.
6. (Trained technician only) Remove the affected microprocessor and check the microprocessor socket pins for any damaged pins. If damage is found, replace the system board.
7. (Trained technician only) Replace the affected microprocessor.

- **806f050c-2013ffff : Memory Logging Limit Reached for [PhysicalMemoryElementName] on Subsystem [MemoryElementName]. (DIMM 19)**

This message is for the use case when an implementation has detected that the Memory Logging Limit has been Reached.

May also be shown as 806f050c2013ffff or 0x806f050c2013ffff

Severity
Warning

Serviceable
Yes

Automatically notify support
Yes

Alert Category
Warning - Memory

SNMP Trap ID
43

CIM Information
Prefix: PLAT **ID:** 0144

User Response
Note: Each time you install or remove a DIMM, you must disconnect the server from the power source; then, wait 10 seconds before restarting the server.

1. Refer to TIP H212293 for minimum code level.
2. Check the Lenovo support website for an applicable retain tip or firmware update that applies to this memory error.
3. Swap the affected DIMMs (as indicated by the error LEDs on the system board or the event logs) to a different memory channel or microprocessor.

4. If the error still occurs on the same DIMM, replace the affected DIMM.
5. (Trained technician only) If the problem occurs on the same DIMM connector, check the DIMM connector. If the connector contains any foreign material or is damaged, replace the system board.
6. (Trained technician only) Remove the affected microprocessor and check the microprocessor socket pins for any damaged pins. If damage is found, replace the system board.
7. (Trained technician only) Replace the affected microprocessor.

- **806f050c-2014ffff : Memory Logging Limit Reached for [PhysicalMemoryElementName] on Subsystem [MemoryElementName]. (DIMM 20)**

  This message is for the use case when an implementation has detected that the Memory Logging Limit has been Reached.

  May also be shown as 806f050c2014ffff or 0x806f050c2014ffff

  Severity
  Warning

  Serviceable
  Yes

  Automatically notify support
  Yes

  Alert Category
  Warning - Memory

  SNMP Trap ID
  43

  CIM Information
  Prefix: PLAT **ID:** 0144

  User Response
  Note: Each time you install or remove a DIMM, you must disconnect the server from the power source; then, wait 10 seconds before restarting the server.

  1. Refer to TIP H212293 for minimum code level.
  2. Check the Lenovo support website for an applicable retain tip or firmware update that applies to this memory error.
  3. Swap the affected DIMMs (as indicated by the error LEDs on the system board or the event logs) to a different memory channel or microprocessor.
  4. If the error still occurs on the same DIMM, replace the affected DIMM.
  5. (Trained technician only) If the problem occurs on the same DIMM connector, check the DIMM connector. If the connector contains any foreign material or is damaged, replace the system board.
  6. (Trained technician only) Remove the affected microprocessor and check the microprocessor socket pins for any damaged pins. If damage is found, replace the system board.
  7. (Trained technician only) Replace the affected microprocessor.

- **806f050c-2015ffff : Memory Logging Limit Reached for [PhysicalMemoryElementName] on Subsystem [MemoryElementName]. (DIMM 21)**

  This message is for the use case when an implementation has detected that the Memory Logging Limit has been Reached.

May also be shown as 806f050c2015ffff or 0x806f050c2015ffff

Severity
Warning

Serviceable
Yes

Automatically notify support
Yes

Alert Category
Warning - Memory

SNMP Trap ID
43

CIM Information
Prefix: PLAT **ID:** 0144

User Response
Note: Each time you install or remove a DIMM, you must disconnect the server from the power source; then, wait 10 seconds before restarting the server.

1. Refer to TIP H212293 for minimum code level.
2. Check the Lenovo support website for an applicable retain tip or firmware update that applies to this memory error.
3. Swap the affected DIMMs (as indicated by the error LEDs on the system board or the event logs) to a different memory channel or microprocessor.
4. If the error still occurs on the same DIMM, replace the affected DIMM.
5. (Trained technician only) If the problem occurs on the same DIMM connector, check the DIMM connector. If the connector contains any foreign material or is damaged, replace the system board.
6. (Trained technician only) Remove the affected microprocessor and check the microprocessor socket pins for any damaged pins. If damage is found, replace the system board.
7. (Trained technician only) Replace the affected microprocessor.

- **806f050c-2016ffff : Memory Logging Limit Reached for [PhysicalMemoryElementName] on Subsystem [MemoryElementName]. (DIMM 22)**

This message is for the use case when an implementation has detected that the Memory Logging Limit has been Reached.

May also be shown as 806f050c2016ffff or 0x806f050c2016ffff

Severity
Warning

Serviceable
Yes

Automatically notify support
Yes

Alert Category
Warning - Memory

SNMP Trap ID
43

CIM Information
Prefix: PLAT **ID:** 0144

User Response
Note: Each time you install or remove a DIMM, you must disconnect the server from the power source; then, wait 10 seconds before restarting the server.

1. Refer to TIP H212293 for minimum code level.
2. Check the Lenovo support website for an applicable retain tip or firmware update that applies to this memory error.
3. Swap the affected DIMMs (as indicated by the error LEDs on the system board or the event logs) to a different memory channel or microprocessor.
4. If the error still occurs on the same DIMM, replace the affected DIMM.
5. (Trained technician only) If the problem occurs on the same DIMM connector, check the DIMM connector. If the connector contains any foreign material or is damaged, replace the system board.
6. (Trained technician only) Remove the affected microprocessor and check the microprocessor socket pins for any damaged pins. If damage is found, replace the system board.
7. (Trained technician only) Replace the affected microprocessor.

- **806f050c-2017ffff : Memory Logging Limit Reached for [PhysicalMemoryElementName] on Subsystem [MemoryElementName]. (DIMM 23)**

This message is for the use case when an implementation has detected that the Memory Logging Limit has been Reached.

May also be shown as 806f050c2017ffff or 0x806f050c2017ffff

Severity
Warning

Serviceable
Yes

Automatically notify support
Yes

Alert Category
Warning - Memory

SNMP Trap ID
43

CIM Information
Prefix: PLAT **ID:** 0144

User Response
Note: Each time you install or remove a DIMM, you must disconnect the server from the power source; then, wait 10 seconds before restarting the server.

1. Refer to TIP H212293 for minimum code level.
2. Check the Lenovo support website for an applicable retain tip or firmware update that applies to this memory error.
3. Swap the affected DIMMs (as indicated by the error LEDs on the system board or the event logs) to a different memory channel or microprocessor.
4. If the error still occurs on the same DIMM, replace the affected DIMM.

5. (Trained technician only) If the problem occurs on the same DIMM connector, check the DIMM connector. If the connector contains any foreign material or is damaged, replace the system board.
6. (Trained technician only) Remove the affected microprocessor and check the microprocessor socket pins for any damaged pins. If damage is found, replace the system board.
7. (Trained technician only) Replace the affected microprocessor.

- **806f050c-2018ffff : Memory Logging Limit Reached for [PhysicalMemoryElementName] on Subsystem [MemoryElementName]. (DIMM 24)**

  This message is for the use case when an implementation has detected that the Memory Logging Limit has been Reached.

  May also be shown as 806f050c2018ffff or 0x806f050c2018ffff

  Severity
  Warning

  Serviceable
  Yes

  Automatically notify support
  Yes

  Alert Category
  Warning - Memory

  SNMP Trap ID
  43

  CIM Information
  Prefix: PLAT **ID:** 0144

  User Response
  Note: Each time you install or remove a DIMM, you must disconnect the server from the power source; then, wait 10 seconds before restarting the server.

  1. Refer to TIP H212293 for minimum code level.
  2. Check the Lenovo support website for an applicable retain tip or firmware update that applies to this memory error.
  3. Swap the affected DIMMs (as indicated by the error LEDs on the system board or the event logs) to a different memory channel or microprocessor.
  4. If the error still occurs on the same DIMM, replace the affected DIMM.
  5. (Trained technician only) If the problem occurs on the same DIMM connector, check the DIMM connector. If the connector contains any foreign material or is damaged, replace the system board.
  6. (Trained technician only) Remove the affected microprocessor and check the microprocessor socket pins for any damaged pins. If damage is found, replace the system board.
  7. (Trained technician only) Replace the affected microprocessor.

- **806f050c-2581ffff : Memory Logging Limit Reached for [PhysicalMemoryElementName] on Subsystem [MemoryElementName]. (All DIMMS)**

  This message is for the use case when an implementation has detected that the Memory Logging Limit has been Reached.

  May also be shown as 806f050c2581ffff or 0x806f050c2581ffff

Severity
Warning

Serviceable
Yes

Automatically notify support
Yes

Alert Category
Warning - Memory

SNMP Trap ID
43

CIM Information
Prefix: PLAT **ID:** 0144

User Response
Note: Each time you install or remove a DIMM, you must disconnect the server from the power source; then, wait 10 seconds before restarting the server.

1. Refer to TIP H212293 for minimum code level.
2. Check the Lenovo support website for an applicable retain tip or firmware update that applies to this memory error.
3. Swap the affected DIMMs (as indicated by the error LEDs on the system board or the event logs) to a different memory channel or microprocessor.
4. If the error still occurs on the same DIMM, replace the affected DIMM.
5. (Trained technician only) If the problem occurs on the same DIMM connector, check the DIMM connector. If the connector contains any foreign material or is damaged, replace the system board.
6. (Trained technician only) Remove the affected microprocessor and check the microprocessor socket pins for any damaged pins. If damage is found, replace the system board.
7. (Trained technician only) Replace the affected microprocessor.

One of the DIMMs :

- **806f050d-0400ffff : Array [ComputerSystemElementName] is in critical condition. (Drive 0)**

This message is for the use case when an implementation has detected that an Array is Critical.

May also be shown as 806f050d0400ffff or 0x806f050d0400ffff

Severity
Error

Serviceable
Yes

Automatically notify support
No

Alert Category
Critical - Hard Disk drive

SNMP Trap ID
5

CIM Information
Prefix: PLAT **ID:** 0174

User Response

1. Make sure that the RAID adapter firmware and hard disk drive firmware are at the latest level.
2. Make sure that the SAS cable is connected correctly.
3. Replace the SAS cable.
4. Check backplane cable connection.
5. Replace the RAID adapter.
6. Replace the hard disk drive that is indicated by a lit status LED.

- **806f050d-0401ffff : Array [ComputerSystemElementName] is in critical condition. (Drive 1)**

This message is for the use case when an implementation has detected that an Array is Critical.

May also be shown as 806f050d0401ffff or 0x806f050d0401ffff

Severity
Error

Serviceable
Yes

Automatically notify support
No

Alert Category
Critical - Hard Disk drive

SNMP Trap ID
5

CIM Information
Prefix: PLAT **ID:** 0174

User Response

1. Make sure that the RAID adapter firmware and hard disk drive firmware are at the latest level.
2. Make sure that the SAS cable is connected correctly.
3. Replace the SAS cable.
4. Check backplane cable connection.
5. Replace the RAID adapter.
6. Replace the hard disk drive that is indicated by a lit status LED.

- **806f050d-0402ffff : Array [ComputerSystemElementName] is in critical condition. (Drive 2)**

This message is for the use case when an implementation has detected that an Array is Critical.

May also be shown as 806f050d0402ffff or 0x806f050d0402ffff

Severity
Error

Serviceable
Yes

Automatically notify support
No

Alert Category
Critical - Hard Disk drive

SNMP Trap ID
5

CIM Information
Prefix: PLAT **ID:** 0174

User Response

1. Make sure that the RAID adapter firmware and hard disk drive firmware are at the latest level.
2. Make sure that the SAS cable is connected correctly.
3. Replace the SAS cable.
4. Check backplane cable connection.
5. Replace the RAID adapter.
6. Replace the hard disk drive that is indicated by a lit status LED.

- **806f050d-0403ffff : Array [ComputerSystemElementName] is in critical condition. (Drive 3)**

This message is for the use case when an implementation has detected that an Array is Critical.

May also be shown as 806f050d0403ffff or 0x806f050d0403ffff

Severity
Error

Serviceable
Yes

Automatically notify support
No

Alert Category
Critical - Hard Disk drive

SNMP Trap ID
5

CIM Information
Prefix: PLAT **ID:** 0174

User Response

1. Make sure that the RAID adapter firmware and hard disk drive firmware are at the latest level.
2. Make sure that the SAS cable is connected correctly.
3. Replace the SAS cable.
4. Check backplane cable connection.
5. Replace the RAID adapter.
6. Replace the hard disk drive that is indicated by a lit status LED.

- **806f050d-0404ffff : Array [ComputerSystemElementName] is in critical condition. (Drive 4)**

This message is for the use case when an implementation has detected that an Array is Critical.

May also be shown as 806f050d0404ffff or 0x806f050d0404ffff

Severity
Error

Serviceable
Yes

Automatically notify support
No

Alert Category
Critical - Hard Disk drive

SNMP Trap ID
5

CIM Information
Prefix: PLAT **ID:** 0174

User Response

1. Make sure that the RAID adapter firmware and hard disk drive firmware are at the latest level.
2. Make sure that the SAS cable is connected correctly.
3. Replace the SAS cable.
4. Check backplane cable connection.
5. Replace the RAID adapter.
6. Replace the hard disk drive that is indicated by a lit status LED.

- **806f050d-0405ffff : Array [ComputerSystemElementName] is in critical condition. (Drive 5)**

This message is for the use case when an implementation has detected that an Array is Critical.

May also be shown as 806f050d0405ffff or 0x806f050d0405ffff

Severity
Error

Serviceable
Yes

Automatically notify support
No

Alert Category
Critical - Hard Disk drive

SNMP Trap ID
5

CIM Information
Prefix: PLAT **ID:** 0174

User Response

1. Make sure that the RAID adapter firmware and hard disk drive firmware are at the latest level.
2. Make sure that the SAS cable is connected correctly.
3. Replace the SAS cable.
4. Check backplane cable connection.
5. Replace the RAID adapter.
6. Replace the hard disk drive that is indicated by a lit status LED.

- **806f050d-0406ffff : Array [ComputerSystemElementName] is in critical condition. (Drive 6)**

This message is for the use case when an implementation has detected that an Array is Critical.

May also be shown as 806f050d0406ffff or 0x806f050d0406ffff

Severity
Error

Serviceable
Yes

Automatically notify support
No

Alert Category
Critical - Hard Disk drive

SNMP Trap ID
5

CIM Information
Prefix: PLAT **ID:** 0174

User Response

1. Make sure that the RAID adapter firmware and hard disk drive firmware are at the latest level.
2. Make sure that the SAS cable is connected correctly.
3. Replace the SAS cable.
4. Check backplane cable connection.
5. Replace the RAID adapter.
6. Replace the hard disk drive that is indicated by a lit status LED.

- **806f050d-0407ffff : Array [ComputerSystemElementName] is in critical condition. (Drive 7)**

This message is for the use case when an implementation has detected that an Array is Critical.

May also be shown as 806f050d0407ffff or 0x806f050d0407ffff

Severity
Error

Serviceable
Yes

Automatically notify support
No

Alert Category
Critical - Hard Disk drive

SNMP Trap ID
5

CIM Information
Prefix: PLAT **ID:** 0174

User Response

1. Make sure that the RAID adapter firmware and hard disk drive firmware are at the latest level.
2. Make sure that the SAS cable is connected correctly.
3. Replace the SAS cable.
4. Check backplane cable connection.
5. Replace the RAID adapter.
6. Replace the hard disk drive that is indicated by a lit status LED.

- **806f050d-0408ffff : Array [ComputerSystemElementName] is in critical condition. (Drive 8)**

  This message is for the use case when an implementation has detected that an Array is Critical.

  May also be shown as 806f050d0408ffff or 0x806f050d0408ffff

  Severity
  Error

  Serviceable
  Yes

  Automatically notify support
  No

  Alert Category
  Critical - Hard Disk drive

  SNMP Trap ID
  5

  CIM Information
  Prefix: PLAT **ID:** 0174

  User Response

  1. Make sure that the RAID adapter firmware and hard disk drive firmware are at the latest level.
  2. Make sure that the SAS cable is connected correctly.
  3. Replace the SAS cable.
  4. Check backplane cable connection.
  5. Replace the RAID adapter.
  6. Replace the hard disk drive that is indicated by a lit status LED.

- **806f050d-0409ffff : Array [ComputerSystemElementName] is in critical condition. (Drive 9)**

  This message is for the use case when an implementation has detected that an Array is Critical.

  May also be shown as 806f050d0409ffff or 0x806f050d0409ffff

  Severity
  Error

  Serviceable
  Yes

  Automatically notify support
  No

  Alert Category
  Critical - Hard Disk drive

  SNMP Trap ID
  5

  CIM Information
  Prefix: PLAT **ID:** 0174

  User Response

  1. Make sure that the RAID adapter firmware and hard disk drive firmware are at the latest level.
  2. Make sure that the SAS cable is connected correctly.
  3. Replace the SAS cable.

4. Check backplane cable connection.
5. Replace the RAID adapter.
6. Replace the hard disk drive that is indicated by a lit status LED.

- **806f050d-040affff : Array [ComputerSystemElementName] is in critical condition. (Drive 10)**

  This message is for the use case when an implementation has detected that an Array is Critical.

  May also be shown as 806f050d040affff or 0x806f050d040affff

  Severity
  Error

  Serviceable
  Yes

  Automatically notify support
  No

  Alert Category
  Critical - Hard Disk drive

  SNMP Trap ID
  5

  CIM Information
  Prefix: PLAT **ID:** 0174

  User Response

  1. Make sure that the RAID adapter firmware and hard disk drive firmware are at the latest level.
  2. Make sure that the SAS cable is connected correctly.
  3. Replace the SAS cable.
  4. Check backplane cable connection.
  5. Replace the RAID adapter.
  6. Replace the hard disk drive that is indicated by a lit status LED.

- **806f050d-040bffff : Array [ComputerSystemElementName] is in critical condition. (Drive 11)**

  This message is for the use case when an implementation has detected that an Array is Critical.

  May also be shown as 806f050d040bffff or 0x806f050d040bffff

  Severity
  Error

  Serviceable
  Yes

  Automatically notify support
  No

  Alert Category
  Critical - Hard Disk drive

  SNMP Trap ID
  5

  CIM Information
  Prefix: PLAT **ID:** 0174

User Response

1. Make sure that the RAID adapter firmware and hard disk drive firmware are at the latest level.
2. Make sure that the SAS cable is connected correctly.
3. Replace the SAS cable.
4. Check backplane cable connection.
5. Replace the RAID adapter.
6. Replace the hard disk drive that is indicated by a lit status LED.

- **806f050d-040cffff : Array [ComputerSystemElementName] is in critical condition. (Drive 12)**

This message is for the use case when an implementation has detected that an Array is Critical.

May also be shown as 806f050d040cffff or 0x806f050d040cffff

Severity
Error

Serviceable
Yes

Automatically notify support
No

Alert Category
Critical - Hard Disk drive

SNMP Trap ID
5

CIM Information
Prefix: PLAT **ID:** 0174

User Response

1. Make sure that the RAID adapter firmware and hard disk drive firmware are at the latest level.
2. Make sure that the SAS cable is connected correctly.
3. Replace the SAS cable.
4. Check backplane cable connection.
5. Replace the RAID adapter.
6. Replace the hard disk drive that is indicated by a lit status LED.

- **806f050d-040dffff : Array [ComputerSystemElementName] is in critical condition. (Drive 13)**

This message is for the use case when an implementation has detected that an Array is Critical.

May also be shown as 806f050d040dffff or 0x806f050d040dffff

Severity
Error

Serviceable
Yes

Automatically notify support
No

Alert Category
Critical - Hard Disk drive

SNMP Trap ID
5

CIM Information
Prefix: PLAT **ID:** 0174

User Response

1. Make sure that the RAID adapter firmware and hard disk drive firmware are at the latest level.
2. Make sure that the SAS cable is connected correctly.
3. Replace the SAS cable.
4. Check backplane cable connection.
5. Replace the RAID adapter.
6. Replace the hard disk drive that is indicated by a lit status LED.

- **806f050d-0410ffff : Array [ComputerSystemElementName] is in critical condition. (Ext Drive)**

This message is for the use case when an implementation has detected that an Array is Critical.

May also be shown as 806f050d0410ffff or 0x806f050d0410ffff

Severity
Error

Serviceable
Yes

Automatically notify support
No

Alert Category
Critical - Hard Disk drive

SNMP Trap ID
5

CIM Information
Prefix: PLAT **ID:** 0174

User Response

1. Make sure that the RAID adapter firmware and hard disk drive firmware are at the latest level.
2. Make sure that the SAS cable is connected correctly.
3. Replace the SAS cable.
4. Check backplane cable connection.
5. Replace the RAID adapter.
6. Replace the hard disk drive that is indicated by a lit status LED.

- **806f0513-2582ffff : A PCI SERR has occurred on system [ComputerSystemElementName]. (PCIs)**

This message is for the use case when an implementation has detected a PCI SERR.

May also be shown as 806f05132582ffff or 0x806f05132582ffff

Severity
Error

Serviceable
Yes

Automatically notify support
No

Alert Category
Critical - Other

SNMP Trap ID
50

CIM Information
Prefix: PLAT **ID:** 0234

User Response

1. Check the PCI LED.
2. Reseat the affected adapters and riser card.
3. Update the server firmware (UEFI and IMM) and adapter firmware. Important: Some cluster solutions require specific code levels or coordinated code updates. If the device is part of a cluster solution, verify that the latest level of code is supported for the cluster solution before you update the code.
4. Make sure that the adapter is supported. For a list of supported optional devices, see http://www.lenovo.com/serverproven/.
5. Remove both adapters.
6. Replace the PCIe adapters.
7. Replace the riser card.

- **806f052b-2101ffff : Invalid or Unsupported firmware or software was detected on system [ComputerSystemElementName]. (IMM2 FW Failover)**

This message is for the use case when an implementation has detected an Invalid/Unsupported Firmware/Software Version.

May also be shown as 806f052b2101ffff or 0x806f052b2101ffff

Severity
Error

Serviceable
Yes

Automatically notify support
No

Alert Category
Critical - Other

SNMP Trap ID
50

CIM Information
Prefix: PLAT **ID:** 0446

User Response

1. Make sure the server meets the minimum configuration to start (see Power-supply LEDs).
2. Recover the server firmware from the backup page by restarting the server.
3. Update the server firmware to the latest level (see Updating the firmware). Important: Some cluster solutions require specific code levels or coordinated code updates. If the device is part of

a cluster solution, verify that the latest level of code is supported for the cluster solution before you update the code.

4. Remove components one at a time, restarting the server each time, to see if the problem goes away.
5. If the problem remains, (trained service technician) replace the system board.

- **806f0607-0301ffff : An SM BIOS Uncorrectable CPU complex error for [ProcessorElementName] has asserted. (CPU 1)**

  This message is for the use case when an SM BIOS Uncorrectable CPU complex error has asserted.

  May also be shown as 806f06070301ffff or 0x806f06070301ffff

  Severity
  Error

  Serviceable
  Yes

  Automatically notify support
  No

  Alert Category
  Critical - CPU

  SNMP Trap ID
  40

  CIM Information
  Prefix: PLAT **ID:** 0816

  User Response

  1. Make sure that the installed microprocessors are compatible with each other (see Installing a microprocessor and heat sink for information about microprocessor requirements).
  2. Update the server firmware to the latest level (see Updating the firmware).
  3. (Trained technician only) Replace the incompatible microprocessor.

- **806f0607-0302ffff : An SM BIOS Uncorrectable CPU complex error for [ProcessorElementName] has asserted. (CPU 2)**

  This message is for the use case when an SM BIOS Uncorrectable CPU complex error has asserted.

  May also be shown as 806f06070302ffff or 0x806f06070302ffff

  Severity
  Error

  Serviceable
  Yes

  Automatically notify support
  No

  Alert Category
  Critical - CPU

  SNMP Trap ID
  40

  CIM Information
  Prefix: PLAT **ID:** 0816

User Response

1. Make sure that the installed microprocessors are compatible with each other (see Installing a microprocessor and heat sink for information about microprocessor requirements).
2. Update the server firmware to the latest level (see Updating the firmware).
3. (Trained technician only) Replace the incompatible microprocessor.

- **806f0607-2584ffff : An SM BIOS Uncorrectable CPU complex error for [ProcessorElementName] has asserted. (All CPUs)**

This message is for the use case when an SM BIOS Uncorrectable CPU complex error has asserted.

May also be shown as 806f06072584ffff or 0x806f06072584ffff

Severity
Error

Serviceable
Yes

Automatically notify support
No

Alert Category
Critical - CPU

SNMP Trap ID
40

CIM Information
Prefix: PLAT **ID:** 0816

User Response

1. Make sure that the installed microprocessors are compatible with each other (see Installing a microprocessor and heat sink for information about microprocessor requirements).
2. Update the server firmware to the latest level (see Updating the firmware).
3. (Trained technician only) Replace the incompatible microprocessor.

One of the CPUs :

- **806f0608-1301ffff : [PowerSupplyElementName] has a Configuration Mismatch. (PS Configuration)**

This message is for the use case when an implementation has detected a Power Supply with a Configuration Error.

May also be shown as 806f06081301ffff or 0x806f06081301ffff

Severity
Error

Serviceable
Yes

Automatically notify support
No

Alert Category
Critical - Power

SNMP Trap ID
4

CIM Information
Prefix: PLAT **ID:** 0104

User Response

1. Make sure that the power supplies installed are with the same rating or wattage.
2. Reinstall the power supplies with the same rating or wattage.

- **806f060d-0400ffff : Array [ComputerSystemElementName] has failed. (Drive 0)**

This message is for the use case when an implementation has detected that an Array Failed.

May also be shown as 806f060d0400ffff or 0x806f060d0400ffff

Severity
Error

Serviceable
Yes

Automatically notify support
Yes

Alert Category
Critical - Hard Disk drive

SNMP Trap ID
5

CIM Information
Prefix: PLAT **ID:** 0176

User Response

1. Make sure that the RAID adapter firmware and hard disk drive firmware are at the latest level.
2. Make sure that the SAS cable is connected correctly.
3. Replace the SAS cable.
4. Replace the RAID adapter.
5. Replace the hard disk drive that is indicated by a lit status LED.

- **806f060d-0401ffff : Array [ComputerSystemElementName] has failed. (Drive 1)**

This message is for the use case when an implementation has detected that an Array Failed.

May also be shown as 806f060d0401ffff or 0x806f060d0401ffff

Severity
Error

Serviceable
Yes

Automatically notify support
Yes

Alert Category
Critical - Hard Disk drive

SNMP Trap ID
5

CIM Information
Prefix: PLAT **ID:** 0176

User Response

1. Make sure that the RAID adapter firmware and hard disk drive firmware are at the latest level.
2. Make sure that the SAS cable is connected correctly.
3. Replace the SAS cable.
4. Replace the RAID adapter.
5. Replace the hard disk drive that is indicated by a lit status LED.

- **806f060d-0402ffff : Array [ComputerSystemElementName] has failed. (Drive 2)**

This message is for the use case when an implementation has detected that an Array Failed.

May also be shown as 806f060d0402ffff or 0x806f060d0402ffff

Severity
Error

Serviceable
Yes

Automatically notify support
Yes

Alert Category
Critical - Hard Disk drive

SNMP Trap ID
5

CIM Information
Prefix: PLAT **ID:** 0176

User Response

1. Make sure that the RAID adapter firmware and hard disk drive firmware are at the latest level.
2. Make sure that the SAS cable is connected correctly.
3. Replace the SAS cable.
4. Replace the RAID adapter.
5. Replace the hard disk drive that is indicated by a lit status LED.

- **806f060d-0403ffff : Array [ComputerSystemElementName] has failed. (Drive 3)**

This message is for the use case when an implementation has detected that an Array Failed.

May also be shown as 806f060d0403ffff or 0x806f060d0403ffff

Severity
Error

Serviceable
Yes

Automatically notify support
Yes

Alert Category
Critical - Hard Disk drive

SNMP Trap ID
5

CIM Information
Prefix: PLAT **ID:** 0176

User Response

1. Make sure that the RAID adapter firmware and hard disk drive firmware are at the latest level.
2. Make sure that the SAS cable is connected correctly.
3. Replace the SAS cable.
4. Replace the RAID adapter.
5. Replace the hard disk drive that is indicated by a lit status LED.

- **806f060d-0404ffff : Array [ComputerSystemElementName] has failed. (Drive 4)**

This message is for the use case when an implementation has detected that an Array Failed.

May also be shown as 806f060d0404ffff or 0x806f060d0404ffff

Severity
Error

Serviceable
Yes

Automatically notify support
Yes

Alert Category
Critical - Hard Disk drive

SNMP Trap ID
5

CIM Information
Prefix: PLAT **ID:** 0176

User Response

1. Make sure that the RAID adapter firmware and hard disk drive firmware are at the latest level.
2. Make sure that the SAS cable is connected correctly.
3. Replace the SAS cable.
4. Replace the RAID adapter.
5. Replace the hard disk drive that is indicated by a lit status LED.

- **806f060d-0405ffff : Array [ComputerSystemElementName] has failed. (Drive 5)**

This message is for the use case when an implementation has detected that an Array Failed.

May also be shown as 806f060d0405ffff or 0x806f060d0405ffff

Severity
Error

Serviceable
Yes

Automatically notify support
Yes

Alert Category
Critical - Hard Disk drive

SNMP Trap ID
5

CIM Information
Prefix: PLAT **ID:** 0176

User Response

1. Make sure that the RAID adapter firmware and hard disk drive firmware are at the latest level.
2. Make sure that the SAS cable is connected correctly.
3. Replace the SAS cable.
4. Replace the RAID adapter.
5. Replace the hard disk drive that is indicated by a lit status LED.

- **806f060d-0406ffff : Array [ComputerSystemElementName] has failed. (Drive 6)**

This message is for the use case when an implementation has detected that an Array Failed.

May also be shown as 806f060d0406ffff or 0x806f060d0406ffff

Severity
Error

Serviceable
Yes

Automatically notify support
Yes

Alert Category
Critical - Hard Disk drive

SNMP Trap ID
5

CIM Information
Prefix: PLAT **ID:** 0176

User Response

1. Make sure that the RAID adapter firmware and hard disk drive firmware are at the latest level.
2. Make sure that the SAS cable is connected correctly.
3. Replace the SAS cable.
4. Replace the RAID adapter.
5. Replace the hard disk drive that is indicated by a lit status LED.

- **806f060d-0407ffff : Array [ComputerSystemElementName] has failed. (Drive 7)**

This message is for the use case when an implementation has detected that an Array Failed.

May also be shown as 806f060d0407ffff or 0x806f060d0407ffff

Severity
Error

Serviceable
Yes

Automatically notify support
Yes

Alert Category
Critical - Hard Disk drive

SNMP Trap ID
5

CIM Information
Prefix: PLAT **ID:** 0176

User Response

1. Make sure that the RAID adapter firmware and hard disk drive firmware are at the latest level.
2. Make sure that the SAS cable is connected correctly.
3. Replace the SAS cable.
4. Replace the RAID adapter.
5. Replace the hard disk drive that is indicated by a lit status LED.

- **806f060d-0408ffff : Array [ComputerSystemElementName] has failed. (Drive 8)**

This message is for the use case when an implementation has detected that an Array Failed.

May also be shown as 806f060d0408ffff or 0x806f060d0408ffff

Severity
Error

Serviceable
Yes

Automatically notify support
Yes

Alert Category
Critical - Hard Disk drive

SNMP Trap ID
5

CIM Information
Prefix: PLAT **ID:** 0176

User Response

1. Make sure that the RAID adapter firmware and hard disk drive firmware are at the latest level.
2. Make sure that the SAS cable is connected correctly.
3. Replace the SAS cable.
4. Replace the RAID adapter.
5. Replace the hard disk drive that is indicated by a lit status LED.

- **806f060d-0409ffff : Array [ComputerSystemElementName] has failed. (Drive 9)**

This message is for the use case when an implementation has detected that an Array Failed.

May also be shown as 806f060d0409ffff or 0x806f060d0409ffff

Severity
Error

Serviceable
Yes

Automatically notify support
Yes

Alert Category
Critical - Hard Disk drive

SNMP Trap ID
5

CIM Information
Prefix: PLAT **ID:** 0176

User Response

1. Make sure that the RAID adapter firmware and hard disk drive firmware are at the latest level.
2. Make sure that the SAS cable is connected correctly.
3. Replace the SAS cable.
4. Replace the RAID adapter.
5. Replace the hard disk drive that is indicated by a lit status LED.

- **806f060d-040affff : Array [ComputerSystemElementName] has failed. (Drive 10)**

This message is for the use case when an implementation has detected that an Array Failed.

May also be shown as 806f060d040affff or 0x806f060d040affff

Severity
Error

Serviceable
Yes

Automatically notify support
Yes

Alert Category
Critical - Hard Disk drive

SNMP Trap ID
5

CIM Information
Prefix: PLAT **ID:** 0176

User Response

1. Make sure that the RAID adapter firmware and hard disk drive firmware are at the latest level.
2. Make sure that the SAS cable is connected correctly.
3. Replace the SAS cable.
4. Replace the RAID adapter.
5. Replace the hard disk drive that is indicated by a lit status LED.

- **806f060d-040bffff : Array [ComputerSystemElementName] has failed. (Drive 11)**

This message is for the use case when an implementation has detected that an Array Failed.

May also be shown as 806f060d040bffff or 0x806f060d040bffff

Severity
Error

Serviceable
Yes

Automatically notify support
Yes

Alert Category
Critical - Hard Disk drive

SNMP Trap ID
5

CIM Information
Prefix: PLAT **ID:** 0176

User Response

1. Make sure that the RAID adapter firmware and hard disk drive firmware are at the latest level.
2. Make sure that the SAS cable is connected correctly.
3. Replace the SAS cable.
4. Replace the RAID adapter.
5. Replace the hard disk drive that is indicated by a lit status LED.

- **806f060d-040cffff : Array [ComputerSystemElementName] has failed. (Drive 12)**

This message is for the use case when an implementation has detected that an Array Failed.

May also be shown as 806f060d040cffff or 0x806f060d040cffff

Severity
Error

Serviceable
Yes

Automatically notify support
Yes

Alert Category
Critical - Hard Disk drive

SNMP Trap ID
5

CIM Information
Prefix: PLAT **ID:** 0176

User Response

1. Make sure that the RAID adapter firmware and hard disk drive firmware are at the latest level.
2. Make sure that the SAS cable is connected correctly.
3. Replace the SAS cable.
4. Replace the RAID adapter.
5. Replace the hard disk drive that is indicated by a lit status LED.

- **806f060d-040dffff : Array [ComputerSystemElementName] has failed. (Drive 13)**

This message is for the use case when an implementation has detected that an Array Failed.

May also be shown as 806f060d040dffff or 0x806f060d040dffff

Severity
Error

Serviceable
Yes

Automatically notify support
Yes

Alert Category
Critical - Hard Disk drive

SNMP Trap ID
5

CIM Information
Prefix: PLAT **ID:** 0176

User Response

1. Make sure that the RAID adapter firmware and hard disk drive firmware are at the latest level.
2. Make sure that the SAS cable is connected correctly.
3. Replace the SAS cable.
4. Replace the RAID adapter.
5. Replace the hard disk drive that is indicated by a lit status LED.

- **806f060d-0410ffff : Array [ComputerSystemElementName] has failed. (Ext Drive)**

This message is for the use case when an implementation has detected that an Array Failed.

May also be shown as 806f060d0410ffff or 0x806f060d0410ffff

Severity
Error

Serviceable
Yes

Automatically notify support
Yes

Alert Category
Critical - Hard Disk drive

SNMP Trap ID
5

CIM Information
Prefix: PLAT **ID:** 0176

User Response

1. Make sure that the RAID adapter firmware and hard disk drive firmware are at the latest level.
2. Make sure that the SAS cable is connected correctly.
3. Replace the SAS cable.
4. Replace the RAID adapter.
5. Replace the hard disk drive that is indicated by a lit status LED.

- **806f070c-2001ffff : Configuration Error for [PhysicalMemoryElementName] on Subsystem [MemoryElementName]. (DIMM 1)**

This message is for the use case when an implementation has detected a Memory DIMM configuration error has been corrected.

May also be shown as 806f070c2001ffff or 0x806f070c2001ffff

Severity
Error

Serviceable
Yes

Automatically notify support
No

Alert Category
Critical - Memory

SNMP Trap ID
41

CIM Information
Prefix: PLAT **ID:** 0126

User Response
Make sure that DIMMs are installed in the correct sequence and have the same size, type, speed, and technology.

- **806f070c-2002ffff : Configuration Error for [PhysicalMemoryElementName] on Subsystem [MemoryElementName]. (DIMM 2)**

  This message is for the use case when an implementation has detected a Memory DIMM configuration error has been corrected.

  May also be shown as 806f070c2002ffff or 0x806f070c2002ffff

  Severity
  Error

  Serviceable
  Yes

  Automatically notify support
  No

  Alert Category
  Critical - Memory

  SNMP Trap ID
  41

  CIM Information
  Prefix: PLAT **ID:** 0126

  User Response
  Make sure that DIMMs are installed in the correct sequence and have the same size, type, speed, and technology.

- **806f070c-2003ffff : Configuration Error for [PhysicalMemoryElementName] on Subsystem [MemoryElementName]. (DIMM 3)**

  This message is for the use case when an implementation has detected a Memory DIMM configuration error has been corrected.

May also be shown as 806f070c2003ffff or 0x806f070c2003ffff

Severity
Error

Serviceable
Yes

Automatically notify support
No

Alert Category
Critical - Memory

SNMP Trap ID
41

CIM Information
Prefix: PLAT **ID:** 0126

User Response
Make sure that DIMMs are installed in the correct sequence and have the same size, type, speed, and technology.

- **806f070c-2004ffff : Configuration Error for [PhysicalMemoryElementName] on Subsystem [MemoryElementName]. (DIMM 4)**

This message is for the use case when an implementation has detected a Memory DIMM configuration error has been corrected.

May also be shown as 806f070c2004ffff or 0x806f070c2004ffff

Severity
Error

Serviceable
Yes

Automatically notify support
No

Alert Category
Critical - Memory

SNMP Trap ID
41

CIM Information
Prefix: PLAT **ID:** 0126

User Response
Make sure that DIMMs are installed in the correct sequence and have the same size, type, speed, and technology.

- **806f070c-2005ffff : Configuration Error for [PhysicalMemoryElementName] on Subsystem [MemoryElementName]. (DIMM 5)**

This message is for the use case when an implementation has detected a Memory DIMM configuration error has been corrected.

May also be shown as 806f070c2005ffff or 0x806f070c2005ffff

Severity

Error

Serviceable
Yes

Automatically notify support
No

Alert Category
Critical - Memory

SNMP Trap ID
41

CIM Information
Prefix: PLAT **ID:** 0126

User Response
Make sure that DIMMs are installed in the correct sequence and have the same size, type, speed, and technology.

- **806f070c-2006ffff : Configuration Error for [PhysicalMemoryElementName] on Subsystem [MemoryElementName]. (DIMM 6)**

  This message is for the use case when an implementation has detected a Memory DIMM configuration error has been corrected.

  May also be shown as 806f070c2006ffff or 0x806f070c2006ffff

  Severity
  Error

  Serviceable
  Yes

  Automatically notify support
  No

  Alert Category
  Critical - Memory

  SNMP Trap ID
  41

  CIM Information
  Prefix: PLAT **ID:** 0126

  User Response
  Make sure that DIMMs are installed in the correct sequence and have the same size, type, speed, and technology.

- **806f070c-2007ffff : Configuration Error for [PhysicalMemoryElementName] on Subsystem [MemoryElementName]. (DIMM 7)**

  This message is for the use case when an implementation has detected a Memory DIMM configuration error has been corrected.

  May also be shown as 806f070c2007ffff or 0x806f070c2007ffff

  Severity
  Error

  Serviceable
  Yes

Automatically notify support
No

Alert Category
Critical - Memory

SNMP Trap ID
41

CIM Information
Prefix: PLAT **ID:** 0126

User Response
Make sure that DIMMs are installed in the correct sequence and have the same size, type, speed, and technology.

- **806f070c-2008ffff : Configuration Error for [PhysicalMemoryElementName] on Subsystem [MemoryElementName]. (DIMM 8)**

  This message is for the use case when an implementation has detected a Memory DIMM configuration error has been corrected.

  May also be shown as 806f070c2008ffff or 0x806f070c2008ffff

  Severity
  Error

  Serviceable
  Yes

  Automatically notify support
  No

  Alert Category
  Critical - Memory

  SNMP Trap ID
  41

  CIM Information
  Prefix: PLAT **ID:** 0126

  User Response
  Make sure that DIMMs are installed in the correct sequence and have the same size, type, speed, and technology.

- **806f070c-2009ffff : Configuration Error for [PhysicalMemoryElementName] on Subsystem [MemoryElementName]. (DIMM 9)**

  This message is for the use case when an implementation has detected a Memory DIMM configuration error has been corrected.

  May also be shown as 806f070c2009ffff or 0x806f070c2009ffff

  Severity
  Error

  Serviceable
  Yes

  Automatically notify support
  No

  Alert Category

Critical - Memory

SNMP Trap ID
41

CIM Information
Prefix: PLAT **ID:** 0126

User Response
Make sure that DIMMs are installed in the correct sequence and have the same size, type, speed, and technology.

- **806f070c-200affff : Configuration Error for [PhysicalMemoryElementName] on Subsystem [MemoryElementName]. (DIMM 10)**

  This message is for the use case when an implementation has detected a Memory DIMM configuration error has been corrected.

  May also be shown as 806f070c200affff or 0x806f070c200affff

  Severity
  Error

  Serviceable
  Yes

  Automatically notify support
  No

  Alert Category
  Critical - Memory

  SNMP Trap ID
  41

  CIM Information
  Prefix: PLAT **ID:** 0126

  User Response
  Make sure that DIMMs are installed in the correct sequence and have the same size, type, speed, and technology.

- **806f070c-200bffff : Configuration Error for [PhysicalMemoryElementName] on Subsystem [MemoryElementName]. (DIMM 11)**

  This message is for the use case when an implementation has detected a Memory DIMM configuration error has been corrected.

  May also be shown as 806f070c200bffff or 0x806f070c200bffff

  Severity
  Error

  Serviceable
  Yes

  Automatically notify support
  No

  Alert Category
  Critical - Memory

  SNMP Trap ID
  41

CIM Information
Prefix: PLAT **ID:** 0126

User Response
Make sure that DIMMs are installed in the correct sequence and have the same size, type, speed, and technology.

- **806f070c-200cffff : Configuration Error for [PhysicalMemoryElementName] on Subsystem [MemoryElementName]. (DIMM 12)**

This message is for the use case when an implementation has detected a Memory DIMM configuration error has been corrected.

May also be shown as 806f070c200cffff or 0x806f070c200cffff

Severity
Error

Serviceable
Yes

Automatically notify support
No

Alert Category
Critical - Memory

SNMP Trap ID
41

CIM Information
Prefix: PLAT **ID:** 0126

User Response
Make sure that DIMMs are installed in the correct sequence and have the same size, type, speed, and technology.

- **806f070c-200dffff : Configuration Error for [PhysicalMemoryElementName] on Subsystem [MemoryElementName]. (DIMM 13)**

This message is for the use case when an implementation has detected a Memory DIMM configuration error has been corrected.

May also be shown as 806f070c200dffff or 0x806f070c200dffff

Severity
Error

Serviceable
Yes

Automatically notify support
No

Alert Category
Critical - Memory

SNMP Trap ID
41

CIM Information
Prefix: PLAT **ID:** 0126

User Response

Make sure that DIMMs are installed in the correct sequence and have the same size, type, speed, and technology.

- **806f070c-200effff : Configuration Error for [PhysicalMemoryElementName] on Subsystem [MemoryElementName]. (DIMM 14)**

  This message is for the use case when an implementation has detected a Memory DIMM configuration error has been corrected.

  May also be shown as 806f070c200effff or 0x806f070c200effff

  Severity
  Error

  Serviceable
  Yes

  Automatically notify support
  No

  Alert Category
  Critical - Memory

  SNMP Trap ID
  41

  CIM Information
  Prefix: PLAT **ID:** 0126

  User Response
  Make sure that DIMMs are installed in the correct sequence and have the same size, type, speed, and technology.

- **806f070c-200fffff : Configuration Error for [PhysicalMemoryElementName] on Subsystem [MemoryElementName]. (DIMM 15)**

  This message is for the use case when an implementation has detected a Memory DIMM configuration error has been corrected.

  May also be shown as 806f070c200fffff or 0x806f070c200fffff

  Severity
  Error

  Serviceable
  Yes

  Automatically notify support
  No

  Alert Category
  Critical - Memory

  SNMP Trap ID
  41

  CIM Information
  Prefix: PLAT **ID:** 0126

  User Response
  Make sure that DIMMs are installed in the correct sequence and have the same size, type, speed, and technology.

- **806f070c-2010ffff : Configuration Error for [PhysicalMemoryElementName] on Subsystem [MemoryElementName]. (DIMM 16)**

  This message is for the use case when an implementation has detected a Memory DIMM configuration error has been corrected.

  May also be shown as 806f070c2010ffff or 0x806f070c2010ffff

  Severity
  Error

  Serviceable
  Yes

  Automatically notify support
  No

  Alert Category
  Critical - Memory

  SNMP Trap ID
  41

  CIM Information
  Prefix: PLAT **ID:** 0126

  User Response
  Make sure that DIMMs are installed in the correct sequence and have the same size, type, speed, and technology.

- **806f070c-2011ffff : Configuration Error for [PhysicalMemoryElementName] on Subsystem [MemoryElementName]. (DIMM 17)**

  This message is for the use case when an implementation has detected a Memory DIMM configuration error has been corrected.

  May also be shown as 806f070c2011ffff or 0x806f070c2011ffff

  Severity
  Error

  Serviceable
  Yes

  Automatically notify support
  No

  Alert Category
  Critical - Memory

  SNMP Trap ID
  41

  CIM Information
  Prefix: PLAT **ID:** 0126

  User Response
  Make sure that DIMMs are installed in the correct sequence and have the same size, type, speed, and technology.

- **806f070c-2012ffff : Configuration Error for [PhysicalMemoryElementName] on Subsystem [MemoryElementName]. (DIMM 18)**

This message is for the use case when an implementation has detected a Memory DIMM configuration error has been corrected.

May also be shown as 806f070c2012ffff or 0x806f070c2012ffff

Severity
Error

Serviceable
Yes

Automatically notify support
No

Alert Category
Critical - Memory

SNMP Trap ID
41

CIM Information
Prefix: PLAT **ID:** 0126

User Response
Make sure that DIMMs are installed in the correct sequence and have the same size, type, speed, and technology.

- **806f070c-2013ffff : Configuration Error for [PhysicalMemoryElementName] on Subsystem [MemoryElementName]. (DIMM 19)**

  This message is for the use case when an implementation has detected a Memory DIMM configuration error has been corrected.

  May also be shown as 806f070c2013ffff or 0x806f070c2013ffff

  Severity
  Error

  Serviceable
  Yes

  Automatically notify support
  No

  Alert Category
  Critical - Memory

  SNMP Trap ID
  41

  CIM Information
  Prefix: PLAT **ID:** 0126

  User Response
  Make sure that DIMMs are installed in the correct sequence and have the same size, type, speed, and technology.

- **806f070c-2014ffff : Configuration Error for [PhysicalMemoryElementName] on Subsystem [MemoryElementName]. (DIMM 20)**

  This message is for the use case when an implementation has detected a Memory DIMM configuration error has been corrected.

May also be shown as 806f070c2014ffff or 0x806f070c2014ffff

Severity
Error

Serviceable
Yes

Automatically notify support
No

Alert Category
Critical - Memory

SNMP Trap ID
41

CIM Information
Prefix: PLAT **ID:** 0126

User Response
Make sure that DIMMs are installed in the correct sequence and have the same size, type, speed, and technology.

- **806f070c-2015ffff : Configuration Error for [PhysicalMemoryElementName] on Subsystem [MemoryElementName]. (DIMM 21)**

This message is for the use case when an implementation has detected a Memory DIMM configuration error has been corrected.

May also be shown as 806f070c2015ffff or 0x806f070c2015ffff

Severity
Error

Serviceable
Yes

Automatically notify support
No

Alert Category
Critical - Memory

SNMP Trap ID
41

CIM Information
Prefix: PLAT **ID:** 0126

User Response
Make sure that DIMMs are installed in the correct sequence and have the same size, type, speed, and technology.

- **806f070c-2016ffff : Configuration Error for [PhysicalMemoryElementName] on Subsystem [MemoryElementName]. (DIMM 22)**

This message is for the use case when an implementation has detected a Memory DIMM configuration error has been corrected.

May also be shown as 806f070c2016ffff or 0x806f070c2016ffff

Severity

Error

Serviceable
Yes

Automatically notify support
No

Alert Category
Critical - Memory

SNMP Trap ID
41

CIM Information
Prefix: PLAT **ID:** 0126

User Response
Make sure that DIMMs are installed in the correct sequence and have the same size, type, speed, and technology.

- **806f070c-2017ffff : Configuration Error for [PhysicalMemoryElementName] on Subsystem [MemoryElementName]. (DIMM 23)**

  This message is for the use case when an implementation has detected a Memory DIMM configuration error has been corrected.

  May also be shown as 806f070c2017ffff or 0x806f070c2017ffff

  Severity
  Error

  Serviceable
  Yes

  Automatically notify support
  No

  Alert Category
  Critical - Memory

  SNMP Trap ID
  41

  CIM Information
  Prefix: PLAT **ID:** 0126

  User Response
  Make sure that DIMMs are installed in the correct sequence and have the same size, type, speed, and technology.

- **806f070c-2018ffff : Configuration Error for [PhysicalMemoryElementName] on Subsystem [MemoryElementName]. (DIMM 24)**

  This message is for the use case when an implementation has detected a Memory DIMM configuration error has been corrected.

  May also be shown as 806f070c2018ffff or 0x806f070c2018ffff

  Severity
  Error

  Serviceable
  Yes

Automatically notify support
No

Alert Category
Critical - Memory

SNMP Trap ID
41

CIM Information
Prefix: PLAT **ID:** 0126

User Response
Make sure that DIMMs are installed in the correct sequence and have the same size, type, speed, and technology.

- **806f070c-2581ffff : Configuration Error for [PhysicalMemoryElementName] on Subsystem [MemoryElementName]. (All DIMMS)**

This message is for the use case when an implementation has detected a Memory DIMM configuration error has been corrected.

May also be shown as 806f070c2581ffff or 0x806f070c2581ffff

Severity
Error

Serviceable
Yes

Automatically notify support
No

Alert Category
Critical - Memory

SNMP Trap ID
41

CIM Information
Prefix: PLAT **ID:** 0126

User Response
Make sure that DIMMs are installed in the correct sequence and have the same size, type, speed, and technology. One of the DIMMs :

- **806f070d-0400ffff : Rebuild in progress for Array in system [ComputerSystemElementName]. (Drive 0)**

This message is for the use case when an implementation has detected that an Array Rebuild is in Progress.

May also be shown as 806f070d0400ffff or 0x806f070d0400ffff

Severity
Info

Serviceable
No

Automatically notify support
No

Alert Category

System - Other

SNMP Trap ID

CIM Information
Prefix: PLAT **ID:** 0178

User Response
No action; information only.

- **806f070d-0401ffff : Rebuild in progress for Array in system [ComputerSystemElementName]. (Drive 1)**

  This message is for the use case when an implementation has detected that an Array Rebuild is in Progress.

  May also be shown as 806f070d0401ffff or 0x806f070d0401ffff

  Severity
  Info

  Serviceable
  No

  Automatically notify support
  No

  Alert Category
  System - Other

  SNMP Trap ID

  CIM Information
  Prefix: PLAT **ID:** 0178

  User Response
  No action; information only.

- **806f070d-0402ffff : Rebuild in progress for Array in system [ComputerSystemElementName]. (Drive 2)**

  This message is for the use case when an implementation has detected that an Array Rebuild is in Progress.

  May also be shown as 806f070d0402ffff or 0x806f070d0402ffff

  Severity
  Info

  Serviceable
  No

  Automatically notify support
  No

  Alert Category
  System - Other

  SNMP Trap ID

  CIM Information

Prefix: PLAT **ID:** 0178

User Response
No action; information only.

- **806f070d-0403ffff : Rebuild in progress for Array in system [ComputerSystemElementName]. (Drive 3)**

This message is for the use case when an implementation has detected that an Array Rebuild is in Progress.

May also be shown as 806f070d0403ffff or 0x806f070d0403ffff

Severity
Info

Serviceable
No

Automatically notify support
No

Alert Category
System - Other

SNMP Trap ID

CIM Information
Prefix: PLAT **ID:** 0178

User Response
No action; information only.

- **806f070d-0404ffff : Rebuild in progress for Array in system [ComputerSystemElementName]. (Drive 4)**

This message is for the use case when an implementation has detected that an Array Rebuild is in Progress.

May also be shown as 806f070d0404ffff or 0x806f070d0404ffff

Severity
Info

Serviceable
No

Automatically notify support
No

Alert Category
System - Other

SNMP Trap ID

CIM Information
Prefix: PLAT **ID:** 0178

User Response
No action; information only.

- **806f070d-0405ffff : Rebuild in progress for Array in system [ComputerSystemElementName]. (Drive 5)**

  This message is for the use case when an implementation has detected that an Array Rebuild is in Progress.

  May also be shown as 806f070d0405ffff or 0x806f070d0405ffff

  Severity
  Info

  Serviceable
  No

  Automatically notify support
  No

  Alert Category
  System - Other

  SNMP Trap ID

  CIM Information
  Prefix: PLAT **ID:** 0178

  User Response
  No action; information only.

- **806f070d-0406ffff : Rebuild in progress for Array in system [ComputerSystemElementName]. (Drive 6)**

  This message is for the use case when an implementation has detected that an Array Rebuild is in Progress.

  May also be shown as 806f070d0406ffff or 0x806f070d0406ffff

  Severity
  Info

  Serviceable
  No

  Automatically notify support
  No

  Alert Category
  System - Other

  SNMP Trap ID

  CIM Information
  Prefix: PLAT **ID:** 0178

  User Response
  No action; information only.

- **806f070d-0407ffff : Rebuild in progress for Array in system [ComputerSystemElementName]. (Drive 7)**

  This message is for the use case when an implementation has detected that an Array Rebuild is in Progress.

May also be shown as 806f070d0407ffff or 0x806f070d0407ffff

Severity
Info

Serviceable
No

Automatically notify support
No

Alert Category
System - Other

SNMP Trap ID

CIM Information
Prefix: PLAT **ID:** 0178

User Response
No action; information only.

- **806f070d-0408ffff : Rebuild in progress for Array in system [ComputerSystemElementName]. (Drive 8)**

This message is for the use case when an implementation has detected that an Array Rebuild is in Progress.

May also be shown as 806f070d0408ffff or 0x806f070d0408ffff

Severity
Info

Serviceable
No

Automatically notify support
No

Alert Category
System - Other

SNMP Trap ID

CIM Information
Prefix: PLAT **ID:** 0178

User Response
No action; information only.

- **806f070d-0409ffff : Rebuild in progress for Array in system [ComputerSystemElementName]. (Drive 9)**

This message is for the use case when an implementation has detected that an Array Rebuild is in Progress.

May also be shown as 806f070d0409ffff or 0x806f070d0409ffff

Severity
Info

Serviceable

No

Automatically notify support
No

Alert Category
System - Other

SNMP Trap ID

CIM Information
Prefix: PLAT **ID:** 0178

User Response
No action; information only.

- **806f070d-040affff : Rebuild in progress for Array in system [ComputerSystemElementName]. (Drive 10)**

  This message is for the use case when an implementation has detected that an Array Rebuild is in Progress.

  May also be shown as 806f070d040affff or 0x806f070d040affff

  Severity
  Info

  Serviceable
  No

  Automatically notify support
  No

  Alert Category
  System - Other

  SNMP Trap ID

  CIM Information
  Prefix: PLAT **ID:** 0178

  User Response
  No action; information only.

- **806f070d-040bffff : Rebuild in progress for Array in system [ComputerSystemElementName]. (Drive 11)**

  This message is for the use case when an implementation has detected that an Array Rebuild is in Progress.

  May also be shown as 806f070d040bffff or 0x806f070d040bffff

  Severity
  Info

  Serviceable
  No

  Automatically notify support
  No

  Alert Category

System - Other

SNMP Trap ID

CIM Information
Prefix: PLAT **ID:** 0178

User Response
No action; information only.

- **806f070d-040cffff : Rebuild in progress for Array in system [ComputerSystemElementName]. (Drive 12)**

This message is for the use case when an implementation has detected that an Array Rebuild is in Progress.

May also be shown as 806f070d040cffff or 0x806f070d040cffff

Severity
Info

Serviceable
No

Automatically notify support
No

Alert Category
System - Other

SNMP Trap ID

CIM Information
Prefix: PLAT **ID:** 0178

User Response
No action; information only.

- **806f070d-040dffff : Rebuild in progress for Array in system [ComputerSystemElementName]. (Drive 13)**

This message is for the use case when an implementation has detected that an Array Rebuild is in Progress.

May also be shown as 806f070d040dffff or 0x806f070d040dffff

Severity
Info

Serviceable
No

Automatically notify support
No

Alert Category
System - Other

SNMP Trap ID

CIM Information

Prefix: PLAT **ID:** 0178

User Response
No action; information only.

- **806f070d-0410ffff : Rebuild in progress for Array in system [ComputerSystemElementName]. (Ext Drive)**

  This message is for the use case when an implementation has detected that an Array Rebuild is in Progress.

  May also be shown as 806f070d0410ffff or 0x806f070d0410ffff

  Severity
  Info

  Serviceable
  No

  Automatically notify support
  No

  Alert Category
  System - Other

  SNMP Trap ID

  CIM Information
  Prefix: PLAT **ID:** 0178

  User Response
  No action; information only.

- **806f072b-2101ffff : A successful software or firmware change was detected on system [ComputerSystemElementName]. (IMM Promotion)**

  This message is for the use case when an implementation has detected a Successful Software or Firmware Change.

  May also be shown as 806f072b2101ffff or 0x806f072b2101ffff

  Severity
  Info

  Serviceable
  No

  Automatically notify support
  No

  Alert Category
  System - Other

  SNMP Trap ID

  CIM Information
  Prefix: PLAT **ID:** 0450

  User Response
  No action; information only. IMM Recovery :

- **806f072b-2201ffff : A successful software or firmware change was detected on system [ComputerSystemElementName]. (Bkup Auto Update)**

  This message is for the use case when an implementation has detected a Successful Software or Firmware Change.

  May also be shown as 806f072b2201ffff or 0x806f072b2201ffff

  Severity
  Info

  Serviceable
  No

  Automatically notify support
  No

  Alert Category
  System - Other

  SNMP Trap ID

  CIM Information
  Prefix: PLAT **ID:** 0450

  User Response
  No action; information only. ROM Recovery :

- **806f0807-0301ffff : [ProcessorElementName] has been Disabled. (CPU 1)**

  This message is for the use case when an implementation has detected a Processor has been Disabled.

  May also be shown as 806f08070301ffff or 0x806f08070301ffff

  Severity
  Info

  Serviceable
  No

  Automatically notify support
  No

  Alert Category
  System - Other

  SNMP Trap ID

  CIM Information
  Prefix: PLAT **ID:** 0061

  User Response
  No action; information only.

- **806f0807-0302ffff : [ProcessorElementName] has been Disabled. (CPU 2)**

  This message is for the use case when an implementation has detected a Processor has been Disabled.

  May also be shown as 806f08070302ffff or 0x806f08070302ffff

  Severity
  Info

Serviceable
No

Automatically notify support
No

Alert Category
System - Other

SNMP Trap ID

CIM Information
Prefix: PLAT **ID:** 0061

User Response
No action; information only.

- **806f0807-2584ffff : [ProcessorElementName] has been Disabled. (All CPUs)**

  This message is for the use case when an implementation has detected a Processor has been Disabled.

  May also be shown as 806f08072584ffff or 0x806f08072584ffff

  Severity
  Info

  Serviceable
  No

  Automatically notify support
  No

  Alert Category
  System - Other

  SNMP Trap ID

  CIM Information
  Prefix: PLAT **ID:** 0061

  User Response
  No action; information only. One of the CPUs :

- **806f080c-2001ffff : Memory sparing initiated for [PhysicalMemoryElementName] on Subsystem [MemoryElementName]. (DIMM 1)**

  This message is for the use case when an implementation has detected that Memory double chip sparing has been initiated.

  May also be shown as 806f080c2001ffff or 0x806f080c2001ffff

  Severity
  Info

  Serviceable
  No

  Automatically notify support
  No

  Alert Category
  System - Other

SNMP Trap ID

CIM Information
Prefix: PLAT **ID:** 0140

User Response
No action; information only.

- **806f080c-2002ffff : Memory sparing initiated for [PhysicalMemoryElementName] on Subsystem [MemoryElementName]. (DIMM 2)**

This message is for the use case when an implementation has detected that Memory double chip sparing has been initiated.

May also be shown as 806f080c2002ffff or 0x806f080c2002ffff

Severity
Info

Serviceable
No

Automatically notify support
No

Alert Category
System - Other

SNMP Trap ID

CIM Information
Prefix: PLAT **ID:** 0140

User Response
No action; information only.

- **806f080c-2003ffff : Memory sparing initiated for [PhysicalMemoryElementName] on Subsystem [MemoryElementName]. (DIMM 3)**

This message is for the use case when an implementation has detected that Memory double chip sparing has been initiated.

May also be shown as 806f080c2003ffff or 0x806f080c2003ffff

Severity
Info

Serviceable
No

Automatically notify support
No

Alert Category
System - Other

SNMP Trap ID

CIM Information
Prefix: PLAT **ID:** 0140

User Response
No action; information only.

- **806f080c-2004ffff : Memory sparing initiated for [PhysicalMemoryElementName] on Subsystem [MemoryElementName]. (DIMM 4)**

  This message is for the use case when an implementation has detected that Memory double chip sparing has been initiated.

  May also be shown as 806f080c2004ffff or 0x806f080c2004ffff

  Severity
  Info

  Serviceable
  No

  Automatically notify support
  No

  Alert Category
  System - Other

  SNMP Trap ID

  CIM Information
  Prefix: PLAT **ID:** 0140

  User Response
  No action; information only.

- **806f080c-2005ffff : Memory sparing initiated for [PhysicalMemoryElementName] on Subsystem [MemoryElementName]. (DIMM 5)**

  This message is for the use case when an implementation has detected that Memory double chip sparing has been initiated.

  May also be shown as 806f080c2005ffff or 0x806f080c2005ffff

  Severity
  Info

  Serviceable
  No

  Automatically notify support
  No

  Alert Category
  System - Other

  SNMP Trap ID

  CIM Information
  Prefix: PLAT **ID:** 0140

  User Response
  No action; information only.

- **806f080c-2006ffff : Memory sparing initiated for [PhysicalMemoryElementName] on Subsystem [MemoryElementName]. (DIMM 6)**

This message is for the use case when an implementation has detected that Memory double chip sparing has been initiated.

May also be shown as 806f080c2006ffff or 0x806f080c2006ffff

Severity
Info

Serviceable
No

Automatically notify support
No

Alert Category
System - Other

SNMP Trap ID

CIM Information
Prefix: PLAT **ID:** 0140

User Response
No action; information only.

- **806f080c-2007ffff : Memory sparing initiated for [PhysicalMemoryElementName] on Subsystem [MemoryElementName]. (DIMM 7)**

This message is for the use case when an implementation has detected that Memory double chip sparing has been initiated.

May also be shown as 806f080c2007ffff or 0x806f080c2007ffff

Severity
Info

Serviceable
No

Automatically notify support
No

Alert Category
System - Other

SNMP Trap ID

CIM Information
Prefix: PLAT **ID:** 0140

User Response
No action; information only.

- **806f080c-2008ffff : Memory sparing initiated for [PhysicalMemoryElementName] on Subsystem [MemoryElementName]. (DIMM 8)**

This message is for the use case when an implementation has detected that Memory double chip sparing has been initiated.

May also be shown as 806f080c2008ffff or 0x806f080c2008ffff

Severity
Info

Serviceable
No

Automatically notify support
No

Alert Category
System - Other

SNMP Trap ID

CIM Information
Prefix: PLAT **ID:** 0140

User Response
No action; information only.

- **806f080c-2009ffff : Memory sparing initiated for [PhysicalMemoryElementName] on Subsystem [MemoryElementName]. (DIMM 9)**

  This message is for the use case when an implementation has detected that Memory double chip sparing has been initiated.

  May also be shown as 806f080c2009ffff or 0x806f080c2009ffff

  Severity
  Info

  Serviceable
  No

  Automatically notify support
  No

  Alert Category
  System - Other

  SNMP Trap ID

  CIM Information
  Prefix: PLAT **ID:** 0140

  User Response
  No action; information only.

- **806f080c-200affff : Memory sparing initiated for [PhysicalMemoryElementName] on Subsystem [MemoryElementName]. (DIMM 10)**

  This message is for the use case when an implementation has detected that Memory double chip sparing has been initiated.

  May also be shown as 806f080c200affff or 0x806f080c200affff

  Severity
  Info

  Serviceable
  No

Automatically notify support
No

Alert Category
System - Other

SNMP Trap ID

CIM Information
Prefix: PLAT **ID:** 0140

User Response
No action; information only.

- **806f080c-200bffff : Memory sparing initiated for [PhysicalMemoryElementName] on Subsystem [MemoryElementName]. (DIMM 11)**

  This message is for the use case when an implementation has detected that Memory double chip sparing has been initiated.

  May also be shown as 806f080c200bffff or 0x806f080c200bffff

  Severity
  Info

  Serviceable
  No

  Automatically notify support
  No

  Alert Category
  System - Other

  SNMP Trap ID

  CIM Information
  Prefix: PLAT **ID:** 0140

  User Response
  No action; information only.

- **806f080c-200cffff : Memory sparing initiated for [PhysicalMemoryElementName] on Subsystem [MemoryElementName]. (DIMM 12)**

  This message is for the use case when an implementation has detected that Memory double chip sparing has been initiated.

  May also be shown as 806f080c200cffff or 0x806f080c200cffff

  Severity
  Info

  Serviceable
  No

  Automatically notify support
  No

  Alert Category
  System - Other

SNMP Trap ID

CIM Information
Prefix: PLAT **ID:** 0140

User Response
No action; information only.

- **806f080c-200dffff : Memory sparing initiated for [PhysicalMemoryElementName] on Subsystem [MemoryElementName]. (DIMM 13)**

  This message is for the use case when an implementation has detected that Memory double chip sparing has been initiated.

  May also be shown as 806f080c200dffff or 0x806f080c200dffff

  Severity
  Info

  Serviceable
  No

  Automatically notify support
  No

  Alert Category
  System - Other

  SNMP Trap ID

  CIM Information
  Prefix: PLAT **ID:** 0140

  User Response
  No action; information only.

- **806f080c-200effff : Memory sparing initiated for [PhysicalMemoryElementName] on Subsystem [MemoryElementName]. (DIMM 14)**

  This message is for the use case when an implementation has detected that Memory double chip sparing has been initiated.

  May also be shown as 806f080c200effff or 0x806f080c200effff

  Severity
  Info

  Serviceable
  No

  Automatically notify support
  No

  Alert Category
  System - Other

  SNMP Trap ID

  CIM Information
  Prefix: PLAT **ID:** 0140

User Response
No action; information only.

- **806f080c-200fffff : Memory sparing initiated for [PhysicalMemoryElementName] on Subsystem [MemoryElementName]. (DIMM 15)**

  This message is for the use case when an implementation has detected that Memory double chip sparing has been initiated.

  May also be shown as 806f080c200fffff or 0x806f080c200fffff

  Severity
  Info

  Serviceable
  No

  Automatically notify support
  No

  Alert Category
  System - Other

  SNMP Trap ID

  CIM Information
  Prefix: PLAT **ID:** 0140

  User Response
  No action; information only.

- **806f080c-2010ffff : Memory sparing initiated for [PhysicalMemoryElementName] on Subsystem [MemoryElementName]. (DIMM 16)**

  This message is for the use case when an implementation has detected that Memory double chip sparing has been initiated.

  May also be shown as 806f080c2010ffff or 0x806f080c2010ffff

  Severity
  Info

  Serviceable
  No

  Automatically notify support
  No

  Alert Category
  System - Other

  SNMP Trap ID

  CIM Information
  Prefix: PLAT **ID:** 0140

  User Response
  No action; information only.

- **806f080c-2011ffff : Memory sparing initiated for [PhysicalMemoryElementName] on Subsystem [MemoryElementName]. (DIMM 17)**

This message is for the use case when an implementation has detected that Memory double chip sparing has been initiated.

May also be shown as 806f080c2011ffff or 0x806f080c2011ffff

Severity
Info

Serviceable
No

Automatically notify support
No

Alert Category
System - Other

SNMP Trap ID

CIM Information
Prefix: PLAT **ID:** 0140

User Response
No action; information only.

- **806f080c-2012ffff : Memory sparing initiated for [PhysicalMemoryElementName] on Subsystem [MemoryElementName]. (DIMM 18)**

This message is for the use case when an implementation has detected that Memory double chip sparing has been initiated.

May also be shown as 806f080c2012ffff or 0x806f080c2012ffff

Severity
Info

Serviceable
No

Automatically notify support
No

Alert Category
System - Other

SNMP Trap ID

CIM Information
Prefix: PLAT **ID:** 0140

User Response
No action; information only.

- **806f080c-2013ffff : Memory sparing initiated for [PhysicalMemoryElementName] on Subsystem [MemoryElementName]. (DIMM 19)**

This message is for the use case when an implementation has detected that Memory double chip sparing has been initiated.

May also be shown as 806f080c2013ffff or 0x806f080c2013ffff

Severity
Info

Serviceable
No

Automatically notify support
No

Alert Category
System - Other

SNMP Trap ID

CIM Information
Prefix: PLAT **ID:** 0140

User Response
No action; information only.

- **806f080c-2014ffff : Memory sparing initiated for [PhysicalMemoryElementName] on Subsystem [MemoryElementName]. (DIMM 20)**

  This message is for the use case when an implementation has detected that Memory double chip sparing has been initiated.

  May also be shown as 806f080c2014ffff or 0x806f080c2014ffff

  Severity
  Info

  Serviceable
  No

  Automatically notify support
  No

  Alert Category
  System - Other

  SNMP Trap ID

  CIM Information
  Prefix: PLAT **ID:** 0140

  User Response
  No action; information only.

- **806f080c-2015ffff : Memory sparing initiated for [PhysicalMemoryElementName] on Subsystem [MemoryElementName]. (DIMM 21)**

  This message is for the use case when an implementation has detected that Memory double chip sparing has been initiated.

  May also be shown as 806f080c2015ffff or 0x806f080c2015ffff

  Severity
  Info

  Serviceable
  No

Automatically notify support
No

Alert Category
System - Other

SNMP Trap ID

CIM Information
Prefix: PLAT **ID:** 0140

User Response
No action; information only.

- **806f080c-2016ffff : Memory sparing initiated for [PhysicalMemoryElementName] on Subsystem [MemoryElementName]. (DIMM 22)**

  This message is for the use case when an implementation has detected that Memory double chip sparing has been initiated.

  May also be shown as 806f080c2016ffff or 0x806f080c2016ffff

  Severity
  Info

  Serviceable
  No

  Automatically notify support
  No

  Alert Category
  System - Other

  SNMP Trap ID

  CIM Information
  Prefix: PLAT **ID:** 0140

  User Response
  No action; information only.

- **806f080c-2017ffff : Memory sparing initiated for [PhysicalMemoryElementName] on Subsystem [MemoryElementName]. (DIMM 23)**

  This message is for the use case when an implementation has detected that Memory double chip sparing has been initiated.

  May also be shown as 806f080c2017ffff or 0x806f080c2017ffff

  Severity
  Info

  Serviceable
  No

  Automatically notify support
  No

  Alert Category
  System - Other

SNMP Trap ID

CIM Information
Prefix: PLAT **ID:** 0140

User Response
No action; information only.

- **806f080c-2018ffff : Memory sparing initiated for [PhysicalMemoryElementName] on Subsystem [MemoryElementName]. (DIMM 24)**

This message is for the use case when an implementation has detected that Memory double chip sparing has been initiated.

May also be shown as 806f080c2018ffff or 0x806f080c2018ffff

Severity
Info

Serviceable
No

Automatically notify support
No

Alert Category
System - Other

SNMP Trap ID

CIM Information
Prefix: PLAT **ID:** 0140

User Response
No action; information only.

- **806f080c-2581ffff : Memory sparing initiated for [PhysicalMemoryElementName] on Subsystem [MemoryElementName]. (All DIMMS)**

This message is for the use case when an implementation has detected that Memory double chip sparing has been initiated.

May also be shown as 806f080c2581ffff or 0x806f080c2581ffff

Severity
Info

Serviceable
No

Automatically notify support
No

Alert Category
System - Other

SNMP Trap ID

CIM Information
Prefix: PLAT **ID:** 0140

User Response
No action; information only. One of the DIMMs :

- **806f0813-2581ffff : An Uncorrectable Bus Error has occurred on system [ComputerSystemElementName]. (DIMMs)**

  This message is for the use case when an implementation has detected a Bus Uncorrectable Error.

  May also be shown as 806f08132581ffff or 0x806f08132581ffff

  Severity
  Error

  Serviceable
  Yes

  Automatically notify support
  Yes

  Alert Category
  Critical - Other

  SNMP Trap ID
  50

  CIM Information
  Prefix: PLAT **ID:** 0240

  User Response

  1. Check the system-event log.
  2. Check the DIMM error LEDs.
  3. Remove the failing DIMM from the system board.
  4. Check for a server firmware update. Important: Some cluster solutions require specific code levels or coordinated code updates. If the device is part of a cluster solution, verify that the latest level of code is supported for the cluster solution before you update the code.
  5. Make sure that the installed DIMMs are supported and configured correctly.
  6. (Trained technician only) Replace the system board.

- **806f0813-2582ffff : An Uncorrectable Bus Error has occurred on system [ComputerSystemElementName]. (PCIs)**

  This message is for the use case when an implementation has detected a Bus Uncorrectable Error.

  May also be shown as 806f08132582ffff or 0x806f08132582ffff

  Severity
  Error

  Serviceable
  Yes

  Automatically notify support
  Yes

  Alert Category
  Critical - Other

  SNMP Trap ID
  50

  CIM Information

Prefix: PLAT **ID:** 0240

User Response

1. Check the system-event log.
2. Check the PCI LED.
3. Remove the adapter from the indicated PCI slot.
4. Check for a server firmware update. Important: Some cluster solutions require specific code levels or coordinated code updates. If the device is part of a cluster solution, verify that the latest level of code is supported for the cluster solution before you update the code.
5. (Trained technician only) Replace the system board.

- **806f0813-2584ffff : An Uncorrectable Bus Error has occurred on system [ComputerSystemElementName]. (CPUs)**

This message is for the use case when an implementation has detected a Bus Uncorrectable Error.

May also be shown as 806f08132584ffff or 0x806f08132584ffff

Severity
Error

Serviceable
Yes

Automatically notify support
Yes

Alert Category
Critical - Other

SNMP Trap ID
50

CIM Information
Prefix: PLAT **ID:** 0240

User Response

1. Check the system-event log.
2. (Trained technician only) Remove the failing microprocessor from the system board (see Removing a microprocessor and heat sink).
3. Check for a server firmware update. Important: Some cluster solutions require specific code levels or coordinated code updates. If the device is part of a cluster solution, verify that the latest level of code is supported for the cluster solution before you update the code.
4. Make sure that the two microprocessors are matching.
5. (Trained technician only) Replace the system board.

- **806f0823-2101ffff : Watchdog Timer interrupt occurred for [WatchdogElementName]. (IPMI Watchdog)**

This message is for the use case when an implementation has detected a Watchdog Timer interrupt occurred.

May also be shown as 806f08232101ffff or 0x806f08232101ffff

Severity
Info

Serviceable

No

Automatically notify support
No

Alert Category
System - Other

SNMP Trap ID

CIM Information
Prefix: PLAT **ID:** 0376

User Response
No action; information only.

- **806f090c-2001ffff : [PhysicalMemoryElementName] on Subsystem [MemoryElementName] Throttled. (DIMM 1)**

  This message is for the use case when an implementation has detected Memory has been Throttled.

  May also be shown as 806f090c2001ffff or 0x806f090c2001ffff

  Severity
  Warning

  Serviceable
  Yes

  Automatically notify support
  No

  Alert Category
  System - Other

  SNMP Trap ID
  22

  CIM Information
  Prefix: PLAT **ID:** 0142

  User Response

  1. Reseat the DIMM, and then restart the server.
  2. Replace DIMM n. (n = DIMM number)

- **806f090c-2002ffff : [PhysicalMemoryElementName] on Subsystem [MemoryElementName] Throttled. (DIMM 2)**

  This message is for the use case when an implementation has detected Memory has been Throttled.

  May also be shown as 806f090c2002ffff or 0x806f090c2002ffff

  Severity
  Warning

  Serviceable
  Yes

  Automatically notify support
  No

  Alert Category

System - Other

SNMP Trap ID
22

CIM Information
Prefix: PLAT **ID:** 0142

User Response

1. Reseat the DIMM, and then restart the server.
2. Replace DIMM n. (n = DIMM number)

- **806f090c-2003ffff : [PhysicalMemoryElementName] on Subsystem [MemoryElementName] Throttled. (DIMM 3)**

  This message is for the use case when an implementation has detected Memory has been Throttled.

  May also be shown as 806f090c2003ffff or 0x806f090c2003ffff

  Severity
  Warning

  Serviceable
  Yes

  Automatically notify support
  No

  Alert Category
  System - Other

  SNMP Trap ID
  22

  CIM Information
  Prefix: PLAT **ID:** 0142

  User Response

  1. Reseat the DIMM, and then restart the server.
  2. Replace DIMM n. (n = DIMM number)

- **806f090c-2004ffff : [PhysicalMemoryElementName] on Subsystem [MemoryElementName] Throttled. (DIMM 4)**

  This message is for the use case when an implementation has detected Memory has been Throttled.

  May also be shown as 806f090c2004ffff or 0x806f090c2004ffff

  Severity
  Warning

  Serviceable
  Yes

  Automatically notify support
  No

  Alert Category
  System - Other

  SNMP Trap ID
  22

CIM Information
Prefix: PLAT **ID:** 0142

User Response

1. Reseat the DIMM, and then restart the server.
2. Replace DIMM n. (n = DIMM number)

- **806f090c-2005ffff : [PhysicalMemoryElementName] on Subsystem [MemoryElementName] Throttled. (DIMM 5)**

This message is for the use case when an implementation has detected Memory has been Throttled.

May also be shown as 806f090c2005ffff or 0x806f090c2005ffff

Severity
Warning

Serviceable
Yes

Automatically notify support
No

Alert Category
System - Other

SNMP Trap ID
22

CIM Information
Prefix: PLAT **ID:** 0142

User Response

1. Reseat the DIMM, and then restart the server.
2. Replace DIMM n. (n = DIMM number)

- **806f090c-2006ffff : [PhysicalMemoryElementName] on Subsystem [MemoryElementName] Throttled. (DIMM 6)**

This message is for the use case when an implementation has detected Memory has been Throttled.

May also be shown as 806f090c2006ffff or 0x806f090c2006ffff

Severity
Warning

Serviceable
Yes

Automatically notify support
No

Alert Category
System - Other

SNMP Trap ID
22

CIM Information
Prefix: PLAT **ID:** 0142

User Response

1. Reseat the DIMM, and then restart the server.
2. Replace DIMM n. (n = DIMM number)

- **806f090c-2007ffff : [PhysicalMemoryElementName] on Subsystem [MemoryElementName] Throttled. (DIMM 7)**

  This message is for the use case when an implementation has detected Memory has been Throttled.

  May also be shown as 806f090c2007ffff or 0x806f090c2007ffff

  Severity
  Warning

  Serviceable
  Yes

  Automatically notify support
  No

  Alert Category
  System - Other

  SNMP Trap ID
  22

  CIM Information
  Prefix: PLAT **ID:** 0142

  User Response

  1. Reseat the DIMM, and then restart the server.
  2. Replace DIMM n. (n = DIMM number)

- **806f090c-2008ffff : [PhysicalMemoryElementName] on Subsystem [MemoryElementName] Throttled. (DIMM 8)**

  This message is for the use case when an implementation has detected Memory has been Throttled.

  May also be shown as 806f090c2008ffff or 0x806f090c2008ffff

  Severity
  Warning

  Serviceable
  Yes

  Automatically notify support
  No

  Alert Category
  System - Other

  SNMP Trap ID
  22

  CIM Information
  Prefix: PLAT **ID:** 0142

  User Response

  1. Reseat the DIMM, and then restart the server.
  2. Replace DIMM n. (n = DIMM number)

- **806f090c-2009ffff : [PhysicalMemoryElementName] on Subsystem [MemoryElementName] Throttled. (DIMM 9)**

  This message is for the use case when an implementation has detected Memory has been Throttled.

  May also be shown as 806f090c2009ffff or 0x806f090c2009ffff

  Severity
  Warning

  Serviceable
  Yes

  Automatically notify support
  No

  Alert Category
  System - Other

  SNMP Trap ID
  22

  CIM Information
  Prefix: PLAT **ID:** 0142

  User Response

  1. Reseat the DIMM, and then restart the server.
  2. Replace DIMM n. (n = DIMM number)

- **806f090c-200affff : [PhysicalMemoryElementName] on Subsystem [MemoryElementName] Throttled. (DIMM 10)**

  This message is for the use case when an implementation has detected Memory has been Throttled.

  May also be shown as 806f090c200affff or 0x806f090c200affff

  Severity
  Warning

  Serviceable
  Yes

  Automatically notify support
  No

  Alert Category
  System - Other

  SNMP Trap ID
  22

  CIM Information
  Prefix: PLAT **ID:** 0142

  User Response

  1. Reseat the DIMM, and then restart the server.
  2. Replace DIMM n. (n = DIMM number)

- **806f090c-200bffff : [PhysicalMemoryElementName] on Subsystem [MemoryElementName] Throttled. (DIMM 11)**

  This message is for the use case when an implementation has detected Memory has been Throttled.

May also be shown as 806f090c200bffff or 0x806f090c200bffff

Severity
Warning

Serviceable
Yes

Automatically notify support
No

Alert Category
System - Other

SNMP Trap ID
22

CIM Information
Prefix: PLAT **ID:** 0142

User Response

1. Reseat the DIMM, and then restart the server.
2. Replace DIMM n. (n = DIMM number)

- **806f090c-200cffff : [PhysicalMemoryElementName] on Subsystem [MemoryElementName] Throttled. (DIMM 12)**

  This message is for the use case when an implementation has detected Memory has been Throttled.

  May also be shown as 806f090c200cffff or 0x806f090c200cffff

  Severity
  Warning

  Serviceable
  Yes

  Automatically notify support
  No

  Alert Category
  System - Other

  SNMP Trap ID
  22

  CIM Information
  Prefix: PLAT **ID:** 0142

  User Response

  1. Reseat the DIMM, and then restart the server.
  2. Replace DIMM n. (n = DIMM number)

- **806f090c-200dffff : [PhysicalMemoryElementName] on Subsystem [MemoryElementName] Throttled. (DIMM 13)**

  This message is for the use case when an implementation has detected Memory has been Throttled.

  May also be shown as 806f090c200dffff or 0x806f090c200dffff

  Severity
  Warning

Serviceable
Yes

Automatically notify support
No

Alert Category
System - Other

SNMP Trap ID
22

CIM Information
Prefix: PLAT **ID:** 0142

User Response

1. Reseat the DIMM, and then restart the server.
2. Replace DIMM n. (n = DIMM number)

- **806f090c-200effff : [PhysicalMemoryElementName] on Subsystem [MemoryElementName] Throttled. (DIMM 14)**

  This message is for the use case when an implementation has detected Memory has been Throttled.

  May also be shown as 806f090c200effff or 0x806f090c200effff

  Severity
  Warning

  Serviceable
  Yes

  Automatically notify support
  No

  Alert Category
  System - Other

  SNMP Trap ID
  22

  CIM Information
  Prefix: PLAT **ID:** 0142

  User Response

  1. Reseat the DIMM, and then restart the server.
  2. Replace DIMM n. (n = DIMM number)

- **806f090c-200fffff : [PhysicalMemoryElementName] on Subsystem [MemoryElementName] Throttled. (DIMM 15)**

  This message is for the use case when an implementation has detected Memory has been Throttled.

  May also be shown as 806f090c200fffff or 0x806f090c200fffff

  Severity
  Warning

  Serviceable
  Yes

  Automatically notify support

No

Alert Category
System - Other

SNMP Trap ID
22

CIM Information
Prefix: PLAT **ID:** 0142

User Response

1. Reseat the DIMM, and then restart the server.
2. Replace DIMM n. (n = DIMM number)

- **806f090c-2010ffff : [PhysicalMemoryElementName] on Subsystem [MemoryElementName] Throttled. (DIMM 16)**

  This message is for the use case when an implementation has detected Memory has been Throttled.

  May also be shown as 806f090c2010ffff or 0x806f090c2010ffff

  Severity
  Warning

  Serviceable
  Yes

  Automatically notify support
  No

  Alert Category
  System - Other

  SNMP Trap ID
  22

  CIM Information
  Prefix: PLAT **ID:** 0142

  User Response

  1. Reseat the DIMM, and then restart the server.
  2. Replace DIMM n. (n = DIMM number)

- **806f090c-2011ffff : [PhysicalMemoryElementName] on Subsystem [MemoryElementName] Throttled. (DIMM 17)**

  This message is for the use case when an implementation has detected Memory has been Throttled.

  May also be shown as 806f090c2011ffff or 0x806f090c2011ffff

  Severity
  Warning

  Serviceable
  Yes

  Automatically notify support
  No

  Alert Category
  System - Other

SNMP Trap ID
22

CIM Information
Prefix: PLAT **ID:** 0142

User Response

1. Reseat the DIMM, and then restart the server.
2. Replace DIMM n. (n = DIMM number)

- **806f090c-2012ffff : [PhysicalMemoryElementName] on Subsystem [MemoryElementName] Throttled. (DIMM 18)**

  This message is for the use case when an implementation has detected Memory has been Throttled.

  May also be shown as 806f090c2012ffff or 0x806f090c2012ffff

  Severity
  Warning

  Serviceable
  Yes

  Automatically notify support
  No

  Alert Category
  System - Other

  SNMP Trap ID
  22

  CIM Information
  Prefix: PLAT **ID:** 0142

  User Response

  1. Reseat the DIMM, and then restart the server.
  2. Replace DIMM n. (n = DIMM number)

- **806f090c-2013ffff : [PhysicalMemoryElementName] on Subsystem [MemoryElementName] Throttled. (DIMM 19)**

  This message is for the use case when an implementation has detected Memory has been Throttled.

  May also be shown as 806f090c2013ffff or 0x806f090c2013ffff

  Severity
  Warning

  Serviceable
  Yes

  Automatically notify support
  No

  Alert Category
  System - Other

  SNMP Trap ID
  22

  CIM Information

Prefix: PLAT **ID:** 0142

User Response

1. Reseat the DIMM, and then restart the server.
2. Replace DIMM n. (n = DIMM number)

- **806f090c-2014ffff : [PhysicalMemoryElementName] on Subsystem [MemoryElementName] Throttled. (DIMM 20)**

  This message is for the use case when an implementation has detected Memory has been Throttled.

  May also be shown as 806f090c2014ffff or 0x806f090c2014ffff

  Severity
  Warning

  Serviceable
  Yes

  Automatically notify support
  No

  Alert Category
  System - Other

  SNMP Trap ID
  22

  CIM Information
  Prefix: PLAT **ID:** 0142

  User Response

  1. Reseat the DIMM, and then restart the server.
  2. Replace DIMM n. (n = DIMM number)

- **806f090c-2015ffff : [PhysicalMemoryElementName] on Subsystem [MemoryElementName] Throttled. (DIMM 21)**

  This message is for the use case when an implementation has detected Memory has been Throttled.

  May also be shown as 806f090c2015ffff or 0x806f090c2015ffff

  Severity
  Warning

  Serviceable
  Yes

  Automatically notify support
  No

  Alert Category
  System - Other

  SNMP Trap ID
  22

  CIM Information
  Prefix: PLAT **ID:** 0142

  User Response

  1. Reseat the DIMM, and then restart the server.

2. Replace DIMM n. (n = DIMM number)

- **806f090c-2016ffff : [PhysicalMemoryElementName] on Subsystem [MemoryElementName] Throttled. (DIMM 22)**

  This message is for the use case when an implementation has detected Memory has been Throttled.

  May also be shown as 806f090c2016ffff or 0x806f090c2016ffff

  Severity
  Warning

  Serviceable
  Yes

  Automatically notify support
  No

  Alert Category
  System - Other

  SNMP Trap ID
  22

  CIM Information
  Prefix: PLAT **ID:** 0142

  User Response

  1. Reseat the DIMM, and then restart the server.
  2. Replace DIMM n. (n = DIMM number)

- **806f090c-2017ffff : [PhysicalMemoryElementName] on Subsystem [MemoryElementName] Throttled. (DIMM 23)**

  This message is for the use case when an implementation has detected Memory has been Throttled.

  May also be shown as 806f090c2017ffff or 0x806f090c2017ffff

  Severity
  Warning

  Serviceable
  Yes

  Automatically notify support
  No

  Alert Category
  System - Other

  SNMP Trap ID
  22

  CIM Information
  Prefix: PLAT **ID:** 0142

  User Response

  1. Reseat the DIMM, and then restart the server.
  2. Replace DIMM n. (n = DIMM number)

- **806f090c-2018ffff : [PhysicalMemoryElementName] on Subsystem [MemoryElementName] Throttled. (DIMM 24)**

This message is for the use case when an implementation has detected Memory has been Throttled.

May also be shown as 806f090c2018ffff or 0x806f090c2018ffff

Severity
Warning

Serviceable
Yes

Automatically notify support
No

Alert Category
System - Other

SNMP Trap ID
22

CIM Information
Prefix: PLAT **ID:** 0142

User Response

1. Reseat the DIMM, and then restart the server.
2. Replace DIMM n. (n = DIMM number)

- **806f0a07-0301ffff : [ProcessorElementName] is operating in a Degraded State. (CPU 1)**

This message is for the use case when an implementation has detected a Processor is running in the Degraded state.

May also be shown as 806f0a070301ffff or 0x806f0a070301ffff

Severity
Warning

Serviceable
Yes

Automatically notify support
No

Alert Category
Warning - CPU

SNMP Trap ID
42

CIM Information
Prefix: PLAT **ID:** 0038

User Response

1. Make sure that the fans are operating, that there are no obstructions to the airflow (front and rear of the server), that the air baffles are in place and correctly installed, and that the server cover is installed and completely closed.
2. Check the ambient temperature. You must be operating within the specifications.
3. Make sure that the heat sink for microprocessor n is installed correctly.
4. (Trained technician only) Replace microprocessor n. (n = microprocessor number)

- **806f0a07-0302ffff : [ProcessorElementName] is operating in a Degraded State. (CPU 2)**

This message is for the use case when an implementation has detected a Processor is running in the Degraded state.

May also be shown as 806f0a070302ffff or 0x806f0a070302ffff

Severity
Warning

Serviceable
Yes

Automatically notify support
No

Alert Category
Warning - CPU

SNMP Trap ID
42

CIM Information
Prefix: PLAT **ID:** 0038

User Response

1. Make sure that the fans are operating, that there are no obstructions to the airflow (front and rear of the server), that the air baffles are in place and correctly installed, and that the server cover is installed and completely closed.
2. Check the ambient temperature. You must be operating within the specifications.
3. Make sure that the heat sink for microprocessor n is installed correctly.
4. (Trained technician only) Replace microprocessor n. (n = microprocessor number)

- **806f0a0c-2001ffff : An Over-Temperature Condition has been detected on the [PhysicalMemoryElementName] on Subsystem [MemoryElementName]. (DIMM 1)**

This message is for the use case when an implementation has detected an Over Temperature Condition for Memory that has been Detected.

May also be shown as 806f0a0c2001ffff or 0x806f0a0c2001ffff

Severity
Error

Serviceable
Yes

Automatically notify support
No

Alert Category
Critical - Temperature

SNMP Trap ID
0

CIM Information
Prefix: PLAT **ID:** 0146

User Response

1. Make sure that the fans are operating, that there are no obstructions to the airflow, that the air baffles are in place and correctly installed, and that the server cover is installed and completely closed.

2. Make sure that ambient temperature is within the specifications.
3. If a fan has failed, complete the action for a fan failure.
4. Replace DIMM n. (n = DIMM number)

- **806f0a0c-2002ffff : An Over-Temperature Condition has been detected on the [PhysicalMemoryElementName] on Subsystem [MemoryElementName]. (DIMM 2)**

  This message is for the use case when an implementation has detected an Over Temperature Condition for Memory that has been Detected.

  May also be shown as 806f0a0c2002ffff or 0x806f0a0c2002ffff

  Severity
  Error

  Serviceable
  Yes

  Automatically notify support
  No

  Alert Category
  Critical - Temperature

  SNMP Trap ID
  0

  CIM Information
  Prefix: PLAT **ID:** 0146

  User Response

  1. Make sure that the fans are operating, that there are no obstructions to the airflow, that the air baffles are in place and correctly installed, and that the server cover is installed and completely closed.
  2. Make sure that ambient temperature is within the specifications.
  3. If a fan has failed, complete the action for a fan failure.
  4. Replace DIMM n. (n = DIMM number)

- **806f0a0c-2003ffff : An Over-Temperature Condition has been detected on the [PhysicalMemoryElementName] on Subsystem [MemoryElementName]. (DIMM 3)**

  This message is for the use case when an implementation has detected an Over Temperature Condition for Memory that has been Detected.

  May also be shown as 806f0a0c2003ffff or 0x806f0a0c2003ffff

  Severity
  Error

  Serviceable
  Yes

  Automatically notify support
  No

  Alert Category
  Critical - Temperature

  SNMP Trap ID
  0

CIM Information
Prefix: PLAT **ID:** 0146

User Response

1. Make sure that the fans are operating, that there are no obstructions to the airflow, that the air baffles are in place and correctly installed, and that the server cover is installed and completely closed.
2. Make sure that ambient temperature is within the specifications.
3. If a fan has failed, complete the action for a fan failure.
4. Replace DIMM n. (n = DIMM number)

- **806f0a0c-2004ffff : An Over-Temperature Condition has been detected on the [PhysicalMemoryElementName] on Subsystem [MemoryElementName]. (DIMM 4)**

This message is for the use case when an implementation has detected an Over Temperature Condition for Memory that has been Detected.

May also be shown as 806f0a0c2004ffff or 0x806f0a0c2004ffff

Severity
Error

Serviceable
Yes

Automatically notify support
No

Alert Category
Critical - Temperature

SNMP Trap ID
0

CIM Information
Prefix: PLAT **ID:** 0146

User Response

1. Make sure that the fans are operating, that there are no obstructions to the airflow, that the air baffles are in place and correctly installed, and that the server cover is installed and completely closed.
2. Make sure that ambient temperature is within the specifications.
3. If a fan has failed, complete the action for a fan failure.
4. Replace DIMM n. (n = DIMM number)

- **806f0a0c-2005ffff : An Over-Temperature Condition has been detected on the [PhysicalMemoryElementName] on Subsystem [MemoryElementName]. (DIMM 5)**

This message is for the use case when an implementation has detected an Over Temperature Condition for Memory that has been Detected.

May also be shown as 806f0a0c2005ffff or 0x806f0a0c2005ffff

Severity
Error

Serviceable
Yes

Automatically notify support
No

Alert Category
Critical - Temperature

SNMP Trap ID
0

CIM Information
Prefix: PLAT **ID:** 0146

User Response

1. Make sure that the fans are operating, that there are no obstructions to the airflow, that the air baffles are in place and correctly installed, and that the server cover is installed and completely closed.
2. Make sure that ambient temperature is within the specifications.
3. If a fan has failed, complete the action for a fan failure.
4. Replace DIMM n. (n = DIMM number)

- **806f0a0c-2006ffff : An Over-Temperature Condition has been detected on the [PhysicalMemoryElementName] on Subsystem [MemoryElementName]. (DIMM 6)**

This message is for the use case when an implementation has detected an Over Temperature Condition for Memory that has been Detected.

May also be shown as 806f0a0c2006ffff or 0x806f0a0c2006ffff

Severity
Error

Serviceable
Yes

Automatically notify support
No

Alert Category
Critical - Temperature

SNMP Trap ID
0

CIM Information
Prefix: PLAT **ID:** 0146

User Response

1. Make sure that the fans are operating, that there are no obstructions to the airflow, that the air baffles are in place and correctly installed, and that the server cover is installed and completely closed.
2. Make sure that ambient temperature is within the specifications.
3. If a fan has failed, complete the action for a fan failure.
4. Replace DIMM n. (n = DIMM number)

- **806f0a0c-2007ffff : An Over-Temperature Condition has been detected on the [PhysicalMemoryElementName] on Subsystem [MemoryElementName]. (DIMM 7)**

This message is for the use case when an implementation has detected an Over Temperature Condition for Memory that has been Detected.

May also be shown as 806f0a0c2007ffff or 0x806f0a0c2007ffff

Severity
Error

Serviceable
Yes

Automatically notify support
No

Alert Category
Critical - Temperature

SNMP Trap ID
0

CIM Information
Prefix: PLAT **ID:** 0146

User Response

1. Make sure that the fans are operating, that there are no obstructions to the airflow, that the air baffles are in place and correctly installed, and that the server cover is installed and completely closed.
2. Make sure that ambient temperature is within the specifications.
3. If a fan has failed, complete the action for a fan failure.
4. Replace DIMM n. (n = DIMM number)

- **806f0a0c-2008ffff : An Over-Temperature Condition has been detected on the [PhysicalMemoryElementName] on Subsystem [MemoryElementName]. (DIMM 8)**

This message is for the use case when an implementation has detected an Over Temperature Condition for Memory that has been Detected.

May also be shown as 806f0a0c2008ffff or 0x806f0a0c2008ffff

Severity
Error

Serviceable
Yes

Automatically notify support
No

Alert Category
Critical - Temperature

SNMP Trap ID
0

CIM Information
Prefix: PLAT **ID:** 0146

User Response

1. Make sure that the fans are operating, that there are no obstructions to the airflow, that the air baffles are in place and correctly installed, and that the server cover is installed and completely closed.
2. Make sure that ambient temperature is within the specifications.

3. If a fan has failed, complete the action for a fan failure.
4. Replace DIMM n. (n = DIMM number)

- **806f0a0c-2009ffff : An Over-Temperature Condition has been detected on the [PhysicalMemoryElementName] on Subsystem [MemoryElementName]. (DIMM 9)**

  This message is for the use case when an implementation has detected an Over Temperature Condition for Memory that has been Detected.

  May also be shown as 806f0a0c2009ffff or 0x806f0a0c2009ffff

  Severity
  Error

  Serviceable
  Yes

  Automatically notify support
  No

  Alert Category
  Critical - Temperature

  SNMP Trap ID
  0

  CIM Information
  Prefix: PLAT **ID:** 0146

  User Response

  1. Make sure that the fans are operating, that there are no obstructions to the airflow, that the air baffles are in place and correctly installed, and that the server cover is installed and completely closed.
  2. Make sure that ambient temperature is within the specifications.
  3. If a fan has failed, complete the action for a fan failure.
  4. Replace DIMM n. (n = DIMM number)

- **806f0a0c-200affff : An Over-Temperature Condition has been detected on the [PhysicalMemoryElementName] on Subsystem [MemoryElementName]. (DIMM 10)**

  This message is for the use case when an implementation has detected an Over Temperature Condition for Memory that has been Detected.

  May also be shown as 806f0a0c200affff or 0x806f0a0c200affff

  Severity
  Error

  Serviceable
  Yes

  Automatically notify support
  No

  Alert Category
  Critical - Temperature

  SNMP Trap ID
  0

  CIM Information

Prefix: PLAT **ID:** 0146

User Response

1. Make sure that the fans are operating, that there are no obstructions to the airflow, that the air baffles are in place and correctly installed, and that the server cover is installed and completely closed.
2. Make sure that ambient temperature is within the specifications.
3. If a fan has failed, complete the action for a fan failure.
4. Replace DIMM n. (n = DIMM number)

- **806f0a0c-200bffff : An Over-Temperature Condition has been detected on the [PhysicalMemoryElementName] on Subsystem [MemoryElementName]. (DIMM 11)**

  This message is for the use case when an implementation has detected an Over Temperature Condition for Memory that has been Detected.

  May also be shown as 806f0a0c200bffff or 0x806f0a0c200bffff

  Severity
  Error

  Serviceable
  Yes

  Automatically notify support
  No

  Alert Category
  Critical - Temperature

  SNMP Trap ID
  0

  CIM Information
  Prefix: PLAT **ID:** 0146

  User Response

  1. Make sure that the fans are operating, that there are no obstructions to the airflow, that the air baffles are in place and correctly installed, and that the server cover is installed and completely closed.
  2. Make sure that ambient temperature is within the specifications.
  3. If a fan has failed, complete the action for a fan failure.
  4. Replace DIMM n. (n = DIMM number)

- **806f0a0c-200cffff : An Over-Temperature Condition has been detected on the [PhysicalMemoryElementName] on Subsystem [MemoryElementName]. (DIMM 12)**

  This message is for the use case when an implementation has detected an Over Temperature Condition for Memory that has been Detected.

  May also be shown as 806f0a0c200cffff or 0x806f0a0c200cffff

  Severity
  Error

  Serviceable
  Yes

  Automatically notify support

No

Alert Category
Critical - Temperature

SNMP Trap ID
0

CIM Information
Prefix: PLAT **ID:** 0146

User Response

1. Make sure that the fans are operating, that there are no obstructions to the airflow, that the air baffles are in place and correctly installed, and that the server cover is installed and completely closed.
2. Make sure that ambient temperature is within the specifications.
3. If a fan has failed, complete the action for a fan failure.
4. Replace DIMM n. (n = DIMM number)

- **806f0a0c-200dffff : An Over-Temperature Condition has been detected on the [PhysicalMemoryElementName] on Subsystem [MemoryElementName]. (DIMM 13)**

This message is for the use case when an implementation has detected an Over Temperature Condition for Memory that has been Detected.

May also be shown as 806f0a0c200dffff or 0x806f0a0c200dffff

Severity
Error

Serviceable
Yes

Automatically notify support
No

Alert Category
Critical - Temperature

SNMP Trap ID
0

CIM Information
Prefix: PLAT **ID:** 0146

User Response

1. Make sure that the fans are operating, that there are no obstructions to the airflow, that the air baffles are in place and correctly installed, and that the server cover is installed and completely closed.
2. Make sure that ambient temperature is within the specifications.
3. If a fan has failed, complete the action for a fan failure.
4. Replace DIMM n. (n = DIMM number)

- **806f0a0c-200effff : An Over-Temperature Condition has been detected on the [PhysicalMemoryElementName] on Subsystem [MemoryElementName]. (DIMM 14)**

This message is for the use case when an implementation has detected an Over Temperature Condition for Memory that has been Detected.

May also be shown as 806f0a0c200effff or 0x806f0a0c200effff

Severity
Error

Serviceable
Yes

Automatically notify support
No

Alert Category
Critical - Temperature

SNMP Trap ID
0

CIM Information
Prefix: PLAT **ID:** 0146

User Response

1. Make sure that the fans are operating, that there are no obstructions to the airflow, that the air baffles are in place and correctly installed, and that the server cover is installed and completely closed.
2. Make sure that ambient temperature is within the specifications.
3. If a fan has failed, complete the action for a fan failure.
4. Replace DIMM n. (n = DIMM number)

- **806f0a0c-200fffff : An Over-Temperature Condition has been detected on the [PhysicalMemoryElementName] on Subsystem [MemoryElementName]. (DIMM 15)**

This message is for the use case when an implementation has detected an Over Temperature Condition for Memory that has been Detected.

May also be shown as 806f0a0c200fffff or 0x806f0a0c200fffff

Severity
Error

Serviceable
Yes

Automatically notify support
No

Alert Category
Critical - Temperature

SNMP Trap ID
0

CIM Information
Prefix: PLAT **ID:** 0146

User Response

1. Make sure that the fans are operating, that there are no obstructions to the airflow, that the air baffles are in place and correctly installed, and that the server cover is installed and completely closed.
2. Make sure that ambient temperature is within the specifications.

3. If a fan has failed, complete the action for a fan failure.
4. Replace DIMM n. (n = DIMM number)

- **806f0a0c-2010ffff : An Over-Temperature Condition has been detected on the [PhysicalMemoryElementName] on Subsystem [MemoryElementName]. (DIMM 16)**

  This message is for the use case when an implementation has detected an Over Temperature Condition for Memory that has been Detected.

  May also be shown as 806f0a0c2010ffff or 0x806f0a0c2010ffff

  Severity
  Error

  Serviceable
  Yes

  Automatically notify support
  No

  Alert Category
  Critical - Temperature

  SNMP Trap ID
  0

  CIM Information
  Prefix: PLAT **ID:** 0146

  User Response

  1. Make sure that the fans are operating, that there are no obstructions to the airflow, that the air baffles are in place and correctly installed, and that the server cover is installed and completely closed.
  2. Make sure that ambient temperature is within the specifications.
  3. If a fan has failed, complete the action for a fan failure.
  4. Replace DIMM n. (n = DIMM number)

- **806f0a0c-2011ffff : An Over-Temperature Condition has been detected on the [PhysicalMemoryElementName] on Subsystem [MemoryElementName]. (DIMM 17)**

  This message is for the use case when an implementation has detected an Over Temperature Condition for Memory that has been Detected.

  May also be shown as 806f0a0c2011ffff or 0x806f0a0c2011ffff

  Severity
  Error

  Serviceable
  Yes

  Automatically notify support
  No

  Alert Category
  Critical - Temperature

  SNMP Trap ID
  0

  CIM Information

Prefix: PLAT **ID:** 0146

User Response

1. Make sure that the fans are operating, that there are no obstructions to the airflow, that the air baffles are in place and correctly installed, and that the server cover is installed and completely closed.
2. Make sure that ambient temperature is within the specifications.
3. If a fan has failed, complete the action for a fan failure.
4. Replace DIMM n. (n = DIMM number)

- **806f0a0c-2012ffff : An Over-Temperature Condition has been detected on the [PhysicalMemoryElementName] on Subsystem [MemoryElementName]. (DIMM 18)**

  This message is for the use case when an implementation has detected an Over Temperature Condition for Memory that has been Detected.

  May also be shown as 806f0a0c2012ffff or 0x806f0a0c2012ffff

  Severity
  Error

  Serviceable
  Yes

  Automatically notify support
  No

  Alert Category
  Critical - Temperature

  SNMP Trap ID
  0

  CIM Information
  Prefix: PLAT **ID:** 0146

  User Response

  1. Make sure that the fans are operating, that there are no obstructions to the airflow, that the air baffles are in place and correctly installed, and that the server cover is installed and completely closed.
  2. Make sure that ambient temperature is within the specifications.
  3. If a fan has failed, complete the action for a fan failure.
  4. Replace DIMM n. (n = DIMM number)

- **806f0a0c-2013ffff : An Over-Temperature Condition has been detected on the [PhysicalMemoryElementName] on Subsystem [MemoryElementName]. (DIMM 19)**

  This message is for the use case when an implementation has detected an Over Temperature Condition for Memory that has been Detected.

  May also be shown as 806f0a0c2013ffff or 0x806f0a0c2013ffff

  Severity
  Error

  Serviceable
  Yes

  Automatically notify support

No

Alert Category
Critical - Temperature

SNMP Trap ID
0

CIM Information
Prefix: PLAT **ID:** 0146

User Response

1. Make sure that the fans are operating, that there are no obstructions to the airflow, that the air baffles are in place and correctly installed, and that the server cover is installed and completely closed.
2. Make sure that ambient temperature is within the specifications.
3. If a fan has failed, complete the action for a fan failure.
4. Replace DIMM n. (n = DIMM number)

- **806f0a0c-2014ffff : An Over-Temperature Condition has been detected on the [PhysicalMemoryElementName] on Subsystem [MemoryElementName]. (DIMM 20)**

This message is for the use case when an implementation has detected an Over Temperature Condition for Memory that has been Detected.

May also be shown as 806f0a0c2014ffff or 0x806f0a0c2014ffff

Severity
Error

Serviceable
Yes

Automatically notify support
No

Alert Category
Critical - Temperature

SNMP Trap ID
0

CIM Information
Prefix: PLAT **ID:** 0146

User Response

1. Make sure that the fans are operating, that there are no obstructions to the airflow, that the air baffles are in place and correctly installed, and that the server cover is installed and completely closed.
2. Make sure that ambient temperature is within the specifications.
3. If a fan has failed, complete the action for a fan failure.
4. Replace DIMM n. (n = DIMM number)

- **806f0a0c-2015ffff : An Over-Temperature Condition has been detected on the [PhysicalMemoryElementName] on Subsystem [MemoryElementName]. (DIMM 21)**

This message is for the use case when an implementation has detected an Over Temperature Condition for Memory that has been Detected.

May also be shown as 806f0a0c2015ffff or 0x806f0a0c2015ffff

Severity
Error

Serviceable
Yes

Automatically notify support
No

Alert Category
Critical - Temperature

SNMP Trap ID
0

CIM Information
Prefix: PLAT **ID:** 0146

User Response

1. Make sure that the fans are operating, that there are no obstructions to the airflow, that the air baffles are in place and correctly installed, and that the server cover is installed and completely closed.
2. Make sure that ambient temperature is within the specifications.
3. If a fan has failed, complete the action for a fan failure.
4. Replace DIMM n. (n = DIMM number)

- **806f0a0c-2016ffff : An Over-Temperature Condition has been detected on the [PhysicalMemoryElementName] on Subsystem [MemoryElementName]. (DIMM 22)**

This message is for the use case when an implementation has detected an Over Temperature Condition for Memory that has been Detected.

May also be shown as 806f0a0c2016ffff or 0x806f0a0c2016ffff

Severity
Error

Serviceable
Yes

Automatically notify support
No

Alert Category
Critical - Temperature

SNMP Trap ID
0

CIM Information
Prefix: PLAT **ID:** 0146

User Response

1. Make sure that the fans are operating, that there are no obstructions to the airflow, that the air baffles are in place and correctly installed, and that the server cover is installed and completely closed.
2. Make sure that ambient temperature is within the specifications.

3. If a fan has failed, complete the action for a fan failure.
4. Replace DIMM n. (n = DIMM number)

- **806f0a0c-2017ffff : An Over-Temperature Condition has been detected on the [PhysicalMemoryElementName] on Subsystem [MemoryElementName]. (DIMM 23)**

  This message is for the use case when an implementation has detected an Over Temperature Condition for Memory that has been Detected.

  May also be shown as 806f0a0c2017ffff or 0x806f0a0c2017ffff

  Severity
  Error

  Serviceable
  Yes

  Automatically notify support
  No

  Alert Category
  Critical - Temperature

  SNMP Trap ID
  0

  CIM Information
  Prefix: PLAT **ID:** 0146

  User Response

  1. Make sure that the fans are operating, that there are no obstructions to the airflow, that the air baffles are in place and correctly installed, and that the server cover is installed and completely closed.
  2. Make sure that ambient temperature is within the specifications.
  3. If a fan has failed, complete the action for a fan failure.
  4. Replace DIMM n. (n = DIMM number)

- **806f0a0c-2018ffff : An Over-Temperature Condition has been detected on the [PhysicalMemoryElementName] on Subsystem [MemoryElementName]. (DIMM 24)**

  This message is for the use case when an implementation has detected an Over Temperature Condition for Memory that has been Detected.

  May also be shown as 806f0a0c2018ffff or 0x806f0a0c2018ffff

  Severity
  Error

  Serviceable
  Yes

  Automatically notify support
  No

  Alert Category
  Critical - Temperature

  SNMP Trap ID
  0

  CIM Information

Prefix: PLAT **ID:** 0146

User Response

1. Make sure that the fans are operating, that there are no obstructions to the airflow, that the air baffles are in place and correctly installed, and that the server cover is installed and completely closed.
2. Make sure that ambient temperature is within the specifications.
3. If a fan has failed, complete the action for a fan failure.
4. Replace DIMM n. (n = DIMM number)

- **806f0a13-0301ffff : A Fatal Bus Error has occurred on system [ComputerSystemElementName]. (CPU 1 PECI)**

  This message is for the use case when an implementation has detected a Bus Fatal Error.

  May also be shown as 806f0a130301ffff or 0x806f0a130301ffff

  Severity
  Error

  Serviceable
  Yes

  Automatically notify support
  No

  Alert Category
  Critical - Other

  SNMP Trap ID
  50

  CIM Information
  Prefix: PLAT **ID:** 0244

  User Response

  1. Reseat the microprocessor, and then restart the server.
  2. Replace microprocessor n. (n = microprocessor number)

- **806f0a13-0302ffff : A Fatal Bus Error has occurred on system [ComputerSystemElementName]. (CPU 2 PECI)**

  This message is for the use case when an implementation has detected a Bus Fatal Error.

  May also be shown as 806f0a130302ffff or 0x806f0a130302ffff

  Severity
  Error

  Serviceable
  Yes

  Automatically notify support
  No

  Alert Category
  Critical - Other

  SNMP Trap ID
  50

CIM Information
Prefix: PLAT **ID:** 0244

User Response

1. Reseat the microprocessor, and then restart the server.
2. Replace microprocessor n. (n = microprocessor number)

- **81010002-0701ffff : Numeric sensor [NumericSensorElementName] going low (lower non-critical) has deasserted. (CMOS Battery)**

  This message is for the use case when an implementation has detected a Lower Non-critical sensor going low has deasserted.

  May also be shown as 810100020701ffff or 0x810100020701ffff

  Severity
  Info

  Serviceable
  No

  Automatically notify support
  No

  Alert Category
  Warning - Voltage

  SNMP Trap ID
  13

  CIM Information
  Prefix: PLAT **ID:** 0477

  User Response
  No action; information only.

- **81010202-0701ffff : Numeric sensor [NumericSensorElementName] going low (lower critical) has deasserted. (CMOS Battery)**

  This message is for the use case when an implementation has detected a Lower Critical sensor going low has deasserted.

  May also be shown as 810102020701ffff or 0x810102020701ffff

  Severity
  Info

  Serviceable
  No

  Automatically notify support
  No

  Alert Category
  Critical - Voltage

  SNMP Trap ID
  1

  CIM Information
  Prefix: PLAT **ID:** 0481

  User Response

No action; information only. SysBrd 12V : SysBrd 3.3V : SysBrd 5V :

- **81010204-1d01ffff : Numeric sensor [NumericSensorElementName] going low (lower critical) has deasserted. (Fan 1A Tach)**

  This message is for the use case when an implementation has detected a Lower Critical sensor going low has deasserted.

  May also be shown as 810102041d01ffff or 0x810102041d01ffff

  Severity
  Info

  Serviceable
  No

  Automatically notify support
  No

  Alert Category
  Critical - Fan Failure

  SNMP Trap ID
  11

  CIM Information
  Prefix: PLAT **ID:** 0481

  User Response
  No action; information only. Fan 1B Tach :

- **81010204-1d02ffff : Numeric sensor [NumericSensorElementName] going low (lower critical) has deasserted. (Fan 2A Tach)**

  This message is for the use case when an implementation has detected a Lower Critical sensor going low has deasserted.

  May also be shown as 810102041d02ffff or 0x810102041d02ffff

  Severity
  Info

  Serviceable
  No

  Automatically notify support
  No

  Alert Category
  Critical - Fan Failure

  SNMP Trap ID
  11

  CIM Information
  Prefix: PLAT **ID:** 0481

  User Response
  No action; information only. Fan 2B Tach :

- **81010204-1d03ffff : Numeric sensor [NumericSensorElementName] going low (lower critical) has deasserted. (Fan 3A Tach)**

This message is for the use case when an implementation has detected a Lower Critical sensor going low has deasserted.

May also be shown as 810102041d03ffff or 0x810102041d03ffff

Severity
Info

Serviceable
No

Automatically notify support
No

Alert Category
Critical - Fan Failure

SNMP Trap ID
11

CIM Information
Prefix: PLAT **ID:** 0481

User Response
No action; information only. Fan 3B Tach :

- **81010204-1d04ffff : Numeric sensor [NumericSensorElementName] going low (lower critical) has deasserted. (Fan 4A Tach)**

  This message is for the use case when an implementation has detected a Lower Critical sensor going low has deasserted.

  May also be shown as 810102041d04ffff or 0x810102041d04ffff

  Severity
  Info

  Serviceable
  No

  Automatically notify support
  No

  Alert Category
  Critical - Fan Failure

  SNMP Trap ID
  11

  CIM Information
  Prefix: PLAT **ID:** 0481

  User Response
  No action; information only. Fan 4B Tach :

- **81010204-1d05ffff : Numeric sensor [NumericSensorElementName] going low (lower critical) has deasserted. (Fan 5A Tach)**

  This message is for the use case when an implementation has detected a Lower Critical sensor going low has deasserted.

  May also be shown as 810102041d05ffff or 0x810102041d05ffff

Severity
Info

Serviceable
No

Automatically notify support
No

Alert Category
Critical - Fan Failure

SNMP Trap ID
11

CIM Information
Prefix: PLAT **ID:** 0481

User Response
No action; information only. Fan 5B Tach :

- **81010204-1d06ffff : Numeric sensor [NumericSensorElementName] going low (lower critical) has deasserted. (Fan 6A Tach)**

  This message is for the use case when an implementation has detected a Lower Critical sensor going low has deasserted.

  May also be shown as 810102041d06ffff or 0x810102041d06ffff

  Severity
  Info

  Serviceable
  No

  Automatically notify support
  No

  Alert Category
  Critical - Fan Failure

  SNMP Trap ID
  11

  CIM Information
  Prefix: PLAT **ID:** 0481

  User Response
  No action; information only. Fan 6B Tach :

- **81010204-1d07ffff : Numeric sensor [NumericSensorElementName] going low (lower critical) has deasserted. (Fan 7A Tach)**

  This message is for the use case when an implementation has detected a Lower Critical sensor going low has deasserted.

  May also be shown as 810102041d07ffff or 0x810102041d07ffff

  Severity
  Info

  Serviceable
  No

Automatically notify support
No

Alert Category
Critical - Fan Failure

SNMP Trap ID
11

CIM Information
Prefix: PLAT **ID:** 0481

User Response
No action; information only. Fan 7B Tach :

- **81010204-1d08ffff : Numeric sensor [NumericSensorElementName] going low (lower critical) has deasserted. (Fan 8A Tach)**

  This message is for the use case when an implementation has detected a Lower Critical sensor going low has deasserted.

  May also be shown as 810102041d08ffff or 0x810102041d08ffff

  Severity
  Info

  Serviceable
  No

  Automatically notify support
  No

  Alert Category
  Critical - Fan Failure

  SNMP Trap ID
  11

  CIM Information
  Prefix: PLAT **ID:** 0481

  User Response
  No action; information only. Fan 8B Tach :

- **81010701-0f01ffff : Numeric sensor [NumericSensorElementName] going high (upper non-critical) has deasserted. (REAR BP Temp A)**

  This message is for the use case when an implementation has detected an Upper Non-critical sensor going high has deasserted.

  May also be shown as 810107010f01ffff or 0x810107010f01ffff

  Severity
  Info

  Serviceable
  No

  Automatically notify support
  No

  Alert Category
  Warning - Temperature

SNMP Trap ID
12

CIM Information
Prefix: PLAT **ID:** 0491

User Response
No action; information only.

- **81010701-0f02ffff : Numeric sensor [NumericSensorElementName] going high (upper non-critical) has deasserted. (REAR BP Temp B)**

  This message is for the use case when an implementation has detected an Upper Non-critical sensor going high has deasserted.

  May also be shown as 810107010f02ffff or 0x810107010f02ffff

  Severity
  Info

  Serviceable
  No

  Automatically notify support
  No

  Alert Category
  Warning - Temperature

  SNMP Trap ID
  12

  CIM Information
  Prefix: PLAT **ID:** 0491

  User Response
  No action; information only.

- **81010701-1001ffff : Numeric sensor [NumericSensorElementName] going high (upper non-critical) has deasserted. (PCI 1 Amb Temp)**

  This message is for the use case when an implementation has detected an Upper Non-critical sensor going high has deasserted.

  May also be shown as 810107011001ffff or 0x810107011001ffff

  Severity
  Info

  Serviceable
  No

  Automatically notify support
  No

  Alert Category
  Warning - Temperature

  SNMP Trap ID
  12

  CIM Information
  Prefix: PLAT **ID:** 0491

User Response
No action; information only. RAID Amb Temp : RR PCI1 Amb Temp :

- **81010701-1002ffff : Numeric sensor [NumericSensorElementName] going high (upper non-critical) has deasserted. (PCI 2 Amb Temp)**

  This message is for the use case when an implementation has detected an Upper Non-critical sensor going high has deasserted.

  May also be shown as 810107011002ffff or 0x810107011002ffff

  Severity
  Info

  Serviceable
  No

  Automatically notify support
  No

  Alert Category
  Warning - Temperature

  SNMP Trap ID
  12

  CIM Information
  Prefix: PLAT **ID:** 0491

  User Response
  No action; information only. RR PCI2 Amb Temp :

- **81010701-1003ffff : Numeric sensor [NumericSensorElementName] going high (upper non-critical) has deasserted. (PCI 3 Amb Temp)**

  This message is for the use case when an implementation has detected an Upper Non-critical sensor going high has deasserted.

  May also be shown as 810107011003ffff or 0x810107011003ffff

  Severity
  Info

  Serviceable
  No

  Automatically notify support
  No

  Alert Category
  Warning - Temperature

  SNMP Trap ID
  12

  CIM Information
  Prefix: PLAT **ID:** 0491

  User Response
  No action; information only. RR PCI3 Amb Temp :

- **81010701-1301ffff : Numeric sensor [NumericSensorElementName] going high (upper non-critical) has deasserted. (PSU 1 Amb Temp)**

This message is for the use case when an implementation has detected an Upper Non-critical sensor going high has deasserted.

May also be shown as 810107011301ffff or 0x810107011301ffff

Severity
Info

Serviceable
No

Automatically notify support
No

Alert Category
Warning - Temperature

SNMP Trap ID
12

CIM Information
Prefix: PLAT **ID:** 0491

User Response
No action; information only.

- **81010701-1302ffff : Numeric sensor [NumericSensorElementName] going high (upper non-critical) has deasserted. (PSU 2 Amb Temp)**

  This message is for the use case when an implementation has detected an Upper Non-critical sensor going high has deasserted.

  May also be shown as 810107011302ffff or 0x810107011302ffff

  Severity
  Info

  Serviceable
  No

  Automatically notify support
  No

  Alert Category
  Warning - Temperature

  SNMP Trap ID
  12

  CIM Information
  Prefix: PLAT **ID:** 0491

  User Response
  No action; information only.

- **81010701-1401ffff : Numeric sensor [NumericSensorElementName] going high (upper non-critical) has deasserted. (CPU1 VR Temp)**

  This message is for the use case when an implementation has detected an Upper Non-critical sensor going high has deasserted.

  May also be shown as 810107011401ffff or 0x810107011401ffff

Severity
Info

Serviceable
No

Automatically notify support
No

Alert Category
Warning - Temperature

SNMP Trap ID
12

CIM Information
Prefix: PLAT **ID:** 0491

User Response
No action; information only.

- **81010701-1402ffff : Numeric sensor [NumericSensorElementName] going high (upper non-critical) has deasserted. (CPU2 VR Temp)**

  This message is for the use case when an implementation has detected an Upper Non-critical sensor going high has deasserted.

  May also be shown as 810107011402ffff or 0x810107011402ffff

  Severity
  Info

  Serviceable
  No

  Automatically notify support
  No

  Alert Category
  Warning - Temperature

  SNMP Trap ID
  12

  CIM Information
  Prefix: PLAT **ID:** 0491

  User Response
  No action; information only.

- **81010701-1403ffff : Numeric sensor [NumericSensorElementName] going high (upper non-critical) has deasserted. (DIMM AB VR Temp)**

  This message is for the use case when an implementation has detected an Upper Non-critical sensor going high has deasserted.

  May also be shown as 810107011403ffff or 0x810107011403ffff

  Severity
  Info

  Serviceable
  No

Automatically notify support
No

Alert Category
Warning - Temperature

SNMP Trap ID
12

CIM Information
Prefix: PLAT **ID:** 0491

User Response
No action; information only.

- **81010701-1404ffff : Numeric sensor [NumericSensorElementName] going high (upper non-critical) has deasserted. (DIMM CD VR Temp)**

  This message is for the use case when an implementation has detected an Upper Non-critical sensor going high has deasserted.

  May also be shown as 810107011404ffff or 0x810107011404ffff

  Severity
  Info

  Serviceable
  No

  Automatically notify support
  No

  Alert Category
  Warning - Temperature

  SNMP Trap ID
  12

  CIM Information
  Prefix: PLAT **ID:** 0491

  User Response
  No action; information only.

- **81010701-1405ffff : Numeric sensor [NumericSensorElementName] going high (upper non-critical) has deasserted. (DIMM EF VR Temp)**

  This message is for the use case when an implementation has detected an Upper Non-critical sensor going high has deasserted.

  May also be shown as 810107011405ffff or 0x810107011405ffff

  Severity
  Info

  Serviceable
  No

  Automatically notify support
  No

  Alert Category
  Warning - Temperature

SNMP Trap ID
12

CIM Information
Prefix: PLAT **ID:** 0491

User Response
No action; information only.

- **81010701-1406ffff : Numeric sensor [NumericSensorElementName] going high (upper non-critical) has deasserted. (DIMM GH VR Temp)**

  This message is for the use case when an implementation has detected an Upper Non-critical sensor going high has deasserted.

  May also be shown as 810107011406ffff or 0x810107011406ffff

  Severity
  Info

  Serviceable
  No

  Automatically notify support
  No

  Alert Category
  Warning - Temperature

  SNMP Trap ID
  12

  CIM Information
  Prefix: PLAT **ID:** 0491

  User Response
  No action; information only.

- **81010701-2d01ffff : Numeric sensor [NumericSensorElementName] going high (upper non-critical) has deasserted. (PCH Temp)**

  This message is for the use case when an implementation has detected an Upper Non-critical sensor going high has deasserted.

  May also be shown as 810107012d01ffff or 0x810107012d01ffff

  Severity
  Info

  Serviceable
  No

  Automatically notify support
  No

  Alert Category
  Warning - Temperature

  SNMP Trap ID
  12

  CIM Information
  Prefix: PLAT **ID:** 0491

User Response
No action; information only.

- **81010701-3701ffff : Numeric sensor [NumericSensorElementName] going high (upper non-critical) has deasserted. (Ambient Temp)**

  This message is for the use case when an implementation has detected an Upper Non-critical sensor going high has deasserted.

  May also be shown as 810107013701ffff or 0x810107013701ffff

  Severity
  Info

  Serviceable
  No

  Automatically notify support
  No

  Alert Category
  Warning - Temperature

  SNMP Trap ID
  12

  CIM Information
  Prefix: PLAT **ID:** 0491

  User Response
  No action; information only.

- **81010901-0f01ffff : Numeric sensor [NumericSensorElementName] going high (upper critical) has deasserted. (REAR BP Temp A)**

  This message is for the use case when an implementation has detected an Upper Critical sensor going high has deasserted.

  May also be shown as 810109010f01ffff or 0x810109010f01ffff

  Severity
  Info

  Serviceable
  No

  Automatically notify support
  No

  Alert Category
  Critical - Temperature

  SNMP Trap ID
  0

  CIM Information
  Prefix: PLAT **ID:** 0495

  User Response
  No action; information only.

- **81010901-0f02ffff : Numeric sensor [NumericSensorElementName] going high (upper critical) has deasserted. (REAR BP Temp B)**

This message is for the use case when an implementation has detected an Upper Critical sensor going high has deasserted.

May also be shown as 810109010f02ffff or 0x810109010f02ffff

Severity
Info

Serviceable
No

Automatically notify support
No

Alert Category
Critical - Temperature

SNMP Trap ID
0

CIM Information
Prefix: PLAT **ID:** 0495

User Response
No action; information only.

- **81010901-1001ffff : Numeric sensor [NumericSensorElementName] going high (upper critical) has deasserted. (PCI 1 Amb Temp)**

  This message is for the use case when an implementation has detected an Upper Critical sensor going high has deasserted.

  May also be shown as 810109011001ffff or 0x810109011001ffff

  Severity
  Info

  Serviceable
  No

  Automatically notify support
  No

  Alert Category
  Critical - Temperature

  SNMP Trap ID
  0

  CIM Information
  Prefix: PLAT **ID:** 0495

  User Response
  No action; information only. RAID Amb Temp : RR PCI1 Amb Temp :

- **81010901-1002ffff : Numeric sensor [NumericSensorElementName] going high (upper critical) has deasserted. (PCI 2 Amb Temp)**

  This message is for the use case when an implementation has detected an Upper Critical sensor going high has deasserted.

  May also be shown as 810109011002ffff or 0x810109011002ffff

Severity
Info

Serviceable
No

Automatically notify support
No

Alert Category
Critical - Temperature

SNMP Trap ID
0

CIM Information
Prefix: PLAT **ID:** 0495

User Response
No action; information only. RR PCI2 Amb Temp :

- **81010901-1003ffff : Numeric sensor [NumericSensorElementName] going high (upper critical) has deasserted. (PCI 3 Amb Temp)**

  This message is for the use case when an implementation has detected an Upper Critical sensor going high has deasserted.

  May also be shown as 810109011003ffff or 0x810109011003ffff

  Severity
  Info

  Serviceable
  No

  Automatically notify support
  No

  Alert Category
  Critical - Temperature

  SNMP Trap ID
  0

  CIM Information
  Prefix: PLAT **ID:** 0495

  User Response
  No action; information only. RR PCI3 Amb Temp :

- **81010901-1301ffff : Numeric sensor [NumericSensorElementName] going high (upper critical) has deasserted. (PSU 1 Amb Temp)**

  This message is for the use case when an implementation has detected an Upper Critical sensor going high has deasserted.

  May also be shown as 810109011301ffff or 0x810109011301ffff

  Severity
  Info

  Serviceable
  No

Automatically notify support
No

Alert Category
Critical - Temperature

SNMP Trap ID
0

CIM Information
Prefix: PLAT **ID:** 0495

User Response
No action; information only.

- **81010901-1302ffff : Numeric sensor [NumericSensorElementName] going high (upper critical) has deasserted. (PSU 2 Amb Temp)**

  This message is for the use case when an implementation has detected an Upper Critical sensor going high has deasserted.

  May also be shown as 810109011302ffff or 0x810109011302ffff

  Severity
  Info

  Serviceable
  No

  Automatically notify support
  No

  Alert Category
  Critical - Temperature

  SNMP Trap ID
  0

  CIM Information
  Prefix: PLAT **ID:** 0495

  User Response
  No action; information only.

- **81010901-1401ffff : Numeric sensor [NumericSensorElementName] going high (upper critical) has deasserted. (CPU1 VR Temp)**

  This message is for the use case when an implementation has detected an Upper Critical sensor going high has deasserted.

  May also be shown as 810109011401ffff or 0x810109011401ffff

  Severity
  Info

  Serviceable
  No

  Automatically notify support
  No

  Alert Category
  Critical - Temperature

SNMP Trap ID
0

CIM Information
Prefix: PLAT **ID:** 0495

User Response
No action; information only.

- **81010901-1402ffff : Numeric sensor [NumericSensorElementName] going high (upper critical) has deasserted. (CPU2 VR Temp)**

  This message is for the use case when an implementation has detected an Upper Critical sensor going high has deasserted.

  May also be shown as 810109011402ffff or 0x810109011402ffff

  Severity
  Info

  Serviceable
  No

  Automatically notify support
  No

  Alert Category
  Critical - Temperature

  SNMP Trap ID
  0

  CIM Information
  Prefix: PLAT **ID:** 0495

  User Response
  No action; information only.

- **81010901-1403ffff : Numeric sensor [NumericSensorElementName] going high (upper critical) has deasserted. (DIMM AB VR Temp)**

  This message is for the use case when an implementation has detected an Upper Critical sensor going high has deasserted.

  May also be shown as 810109011403ffff or 0x810109011403ffff

  Severity
  Info

  Serviceable
  No

  Automatically notify support
  No

  Alert Category
  Critical - Temperature

  SNMP Trap ID
  0

  CIM Information
  Prefix: PLAT **ID:** 0495

User Response
No action; information only.

- **81010901-1404ffff : Numeric sensor [NumericSensorElementName] going high (upper critical) has deasserted. (DIMM CD VR Temp)**

  This message is for the use case when an implementation has detected an Upper Critical sensor going high has deasserted.

  May also be shown as 810109011404ffff or 0x810109011404ffff

  Severity
  Info

  Serviceable
  No

  Automatically notify support
  No

  Alert Category
  Critical - Temperature

  SNMP Trap ID
  0

  CIM Information
  Prefix: PLAT **ID:** 0495

  User Response
  No action; information only.

- **81010901-1405ffff : Numeric sensor [NumericSensorElementName] going high (upper critical) has deasserted. (DIMM EF VR Temp)**

  This message is for the use case when an implementation has detected an Upper Critical sensor going high has deasserted.

  May also be shown as 810109011405ffff or 0x810109011405ffff

  Severity
  Info

  Serviceable
  No

  Automatically notify support
  No

  Alert Category
  Critical - Temperature

  SNMP Trap ID
  0

  CIM Information
  Prefix: PLAT **ID:** 0495

  User Response
  No action; information only.

- **81010901-1406ffff : Numeric sensor [NumericSensorElementName] going high (upper critical) has deasserted. (DIMM GH VR Temp)**

This message is for the use case when an implementation has detected an Upper Critical sensor going high has deasserted.

May also be shown as 810109011406ffff or 0x810109011406ffff

Severity
Info

Serviceable
No

Automatically notify support
No

Alert Category
Critical - Temperature

SNMP Trap ID
0

CIM Information
Prefix: PLAT **ID:** 0495

User Response
No action; information only.

- **81010901-2d01ffff : Numeric sensor [NumericSensorElementName] going high (upper critical) has deasserted. (PCH Temp)**

  This message is for the use case when an implementation has detected an Upper Critical sensor going high has deasserted.

  May also be shown as 810109012d01ffff or 0x810109012d01ffff

  Severity
  Info

  Serviceable
  No

  Automatically notify support
  No

  Alert Category
  Critical - Temperature

  SNMP Trap ID
  0

  CIM Information
  Prefix: PLAT **ID:** 0495

  User Response
  No action; information only.

- **81010901-3701ffff : Numeric sensor [NumericSensorElementName] going high (upper critical) has deasserted. (Ambient Temp)**

  This message is for the use case when an implementation has detected an Upper Critical sensor going high has deasserted.

  May also be shown as 810109013701ffff or 0x810109013701ffff

Severity
Info

Serviceable
No

Automatically notify support
No

Alert Category
Critical - Temperature

SNMP Trap ID
0

CIM Information
Prefix: PLAT **ID:** 0495

User Response
No action; information only.

- **81010902-0701ffff : Numeric sensor [NumericSensorElementName] going high (upper critical) has deasserted. (SysBrd 12V)**

  This message is for the use case when an implementation has detected an Upper Critical sensor going high has deasserted.

  May also be shown as 810109020701ffff or 0x810109020701ffff

  Severity
  Info

  Serviceable
  No

  Automatically notify support
  No

  Alert Category
  Critical - Voltage

  SNMP Trap ID
  1

  CIM Information
  Prefix: PLAT **ID:** 0495

  User Response
  No action; information only. SysBrd 3.3V : SysBrd 5V :

- **81010b01-0f01ffff : Numeric sensor [NumericSensorElementName] going high (upper non-recoverable) has deasserted. (REAR BP Temp A)**

  This message is for the use case when an implementation has detected an Upper Non-recoverable sensor going high has deasserted.

  May also be shown as 81010b010f01ffff or 0x81010b010f01ffff

  Severity
  Info

  Serviceable
  No

Automatically notify support
No

Alert Category
Critical - Temperature

SNMP Trap ID
0

CIM Information
Prefix: PLAT **ID:** 0499

User Response
No action; information only.

- **81010b01-0f02ffff : Numeric sensor [NumericSensorElementName] going high (upper non-recoverable) has deasserted. (REAR BP Temp B)**

  This message is for the use case when an implementation has detected an Upper Non-recoverable sensor going high has deasserted.

  May also be shown as 81010b010f02ffff or 0x81010b010f02ffff

  Severity
  Info

  Serviceable
  No

  Automatically notify support
  No

  Alert Category
  Critical - Temperature

  SNMP Trap ID
  0

  CIM Information
  Prefix: PLAT **ID:** 0499

  User Response
  No action; information only.

- **81010b01-1001ffff : Numeric sensor [NumericSensorElementName] going high (upper non-recoverable) has deasserted. (PCI 1 Amb Temp)**

  This message is for the use case when an implementation has detected an Upper Non-recoverable sensor going high has deasserted.

  May also be shown as 81010b011001ffff or 0x81010b011001ffff

  Severity
  Info

  Serviceable
  No

  Automatically notify support
  No

  Alert Category
  Critical - Temperature

SNMP Trap ID
0

CIM Information
Prefix: PLAT **ID:** 0499

User Response
No action; information only. RAID Amb Temp : RR PCI1 Amb Temp :

- **81010b01-1002ffff : Numeric sensor [NumericSensorElementName] going high (upper non-recoverable) has deasserted. (PCI 2 Amb Temp)**

  This message is for the use case when an implementation has detected an Upper Non-recoverable sensor going high has deasserted.

  May also be shown as 81010b011002ffff or 0x81010b011002ffff

  Severity
  Info

  Serviceable
  No

  Automatically notify support
  No

  Alert Category
  Critical - Temperature

  SNMP Trap ID
  0

  CIM Information
  Prefix: PLAT **ID:** 0499

  User Response
  No action; information only. RR PCI2 Amb Temp :

- **81010b01-1003ffff : Numeric sensor [NumericSensorElementName] going high (upper non-recoverable) has deasserted. (PCI 3 Amb Temp)**

  This message is for the use case when an implementation has detected an Upper Non-recoverable sensor going high has deasserted.

  May also be shown as 81010b011003ffff or 0x81010b011003ffff

  Severity
  Info

  Serviceable
  No

  Automatically notify support
  No

  Alert Category
  Critical - Temperature

  SNMP Trap ID
  0

  CIM Information
  Prefix: PLAT **ID:** 0499

User Response
No action; information only. RR PCI3 Amb Temp :

- **81010b01-1301ffff : Numeric sensor [NumericSensorElementName] going high (upper non-recoverable) has deasserted. (PSU 1 Amb Temp)**

  This message is for the use case when an implementation has detected an Upper Non-recoverable sensor going high has deasserted.

  May also be shown as 81010b011301ffff or 0x81010b011301ffff

  Severity
  Info

  Serviceable
  No

  Automatically notify support
  No

  Alert Category
  Critical - Temperature

  SNMP Trap ID
  0

  CIM Information
  Prefix: PLAT **ID:** 0499

  User Response
  No action; information only.

- **81010b01-1302ffff : Numeric sensor [NumericSensorElementName] going high (upper non-recoverable) has deasserted. (PSU 2 Amb Temp)**

  This message is for the use case when an implementation has detected an Upper Non-recoverable sensor going high has deasserted.

  May also be shown as 81010b011302ffff or 0x81010b011302ffff

  Severity
  Info

  Serviceable
  No

  Automatically notify support
  No

  Alert Category
  Critical - Temperature

  SNMP Trap ID
  0

  CIM Information
  Prefix: PLAT **ID:** 0499

  User Response
  No action; information only.

- **81010b01-1401ffff : Numeric sensor [NumericSensorElementName] going high (upper non-recoverable) has deasserted. (CPU1 VR Temp)**

This message is for the use case when an implementation has detected an Upper Non-recoverable sensor going high has deasserted.

May also be shown as 81010b011401ffff or 0x81010b011401ffff

Severity
Info

Serviceable
No

Automatically notify support
No

Alert Category
Critical - Temperature

SNMP Trap ID
0

CIM Information
Prefix: PLAT **ID:** 0499

User Response
No action; information only.

- **81010b01-1402ffff : Numeric sensor [NumericSensorElementName] going high (upper non-recoverable) has deasserted. (CPU2 VR Temp)**

  This message is for the use case when an implementation has detected an Upper Non-recoverable sensor going high has deasserted.

  May also be shown as 81010b011402ffff or 0x81010b011402ffff

  Severity
  Info

  Serviceable
  No

  Automatically notify support
  No

  Alert Category
  Critical - Temperature

  SNMP Trap ID
  0

  CIM Information
  Prefix: PLAT **ID:** 0499

  User Response
  No action; information only.

- **81010b01-1403ffff : Numeric sensor [NumericSensorElementName] going high (upper non-recoverable) has deasserted. (DIMM AB VR Temp)**

  This message is for the use case when an implementation has detected an Upper Non-recoverable sensor going high has deasserted.

  May also be shown as 81010b011403ffff or 0x81010b011403ffff

Severity
Info

Serviceable
No

Automatically notify support
No

Alert Category
Critical - Temperature

SNMP Trap ID
0

CIM Information
Prefix: PLAT **ID:** 0499

User Response
No action; information only.

- **81010b01-1404ffff : Numeric sensor [NumericSensorElementName] going high (upper non-recoverable) has deasserted. (DIMM CD VR Temp)**

  This message is for the use case when an implementation has detected an Upper Non-recoverable sensor going high has deasserted.

  May also be shown as 81010b011404ffff or 0x81010b011404ffff

  Severity
  Info

  Serviceable
  No

  Automatically notify support
  No

  Alert Category
  Critical - Temperature

  SNMP Trap ID
  0

  CIM Information
  Prefix: PLAT **ID:** 0499

  User Response
  No action; information only.

- **81010b01-1405ffff : Numeric sensor [NumericSensorElementName] going high (upper non-recoverable) has deasserted. (DIMM EF VR Temp)**

  This message is for the use case when an implementation has detected an Upper Non-recoverable sensor going high has deasserted.

  May also be shown as 81010b011405ffff or 0x81010b011405ffff

  Severity
  Info

  Serviceable
  No

Automatically notify support
No

Alert Category
Critical - Temperature

SNMP Trap ID
0

CIM Information
Prefix: PLAT **ID:** 0499

User Response
No action; information only.

- **81010b01-1406ffff : Numeric sensor [NumericSensorElementName] going high (upper non-recoverable) has deasserted. (DIMM GH VR Temp)**

  This message is for the use case when an implementation has detected an Upper Non-recoverable sensor going high has deasserted.

  May also be shown as 81010b011406ffff or 0x81010b011406ffff

  Severity
  Info

  Serviceable
  No

  Automatically notify support
  No

  Alert Category
  Critical - Temperature

  SNMP Trap ID
  0

  CIM Information
  Prefix: PLAT **ID:** 0499

  User Response
  No action; information only.

- **81010b01-2d01ffff : Numeric sensor [NumericSensorElementName] going high (upper non-recoverable) has deasserted. (PCH Temp)**

  This message is for the use case when an implementation has detected an Upper Non-recoverable sensor going high has deasserted.

  May also be shown as 81010b012d01ffff or 0x81010b012d01ffff

  Severity
  Info

  Serviceable
  No

  Automatically notify support
  No

  Alert Category
  Critical - Temperature

SNMP Trap ID
0

CIM Information
Prefix: PLAT **ID:** 0499

User Response
No action; information only.

- **81010b01-3701ffff : Numeric sensor [NumericSensorElementName] going high (upper non-recoverable) has deasserted. (Ambient Temp)**

  This message is for the use case when an implementation has detected an Upper Non-recoverable sensor going high has deasserted.

  May also be shown as 81010b013701ffff or 0x81010b013701ffff

  Severity
  Info

  Serviceable
  No

  Automatically notify support
  No

  Alert Category
  Critical - Temperature

  SNMP Trap ID
  0

  CIM Information
  Prefix: PLAT **ID:** 0499

  User Response
  No action; information only.

- **81030006-2101ffff : Sensor [SensorElementName] has asserted. (Sig Verify Fail)**

  This message is for the use case when an implementation has detected a Sensor has asserted.

  May also be shown as 810300062101ffff or 0x810300062101ffff

  Severity
  Info

  Serviceable
  No

  Automatically notify support
  No

  Alert Category
  System - Other

  SNMP Trap ID

  CIM Information
  Prefix: PLAT **ID:** 0508

  User Response
  No action; information only.

- **8103000f-2101ffff : Sensor [SensorElementName] has asserted. (IMM FW Corrupted)**

  This message is for the use case when an implementation has detected a Sensor has asserted.

  May also be shown as 8103000f2101ffff or 0x8103000f2101ffff

  Severity
  Info

  Serviceable
  No

  Automatically notify support
  No

  Alert Category
  System - Other

  SNMP Trap ID

  CIM Information
  Prefix: PLAT **ID:** 0508

  User Response
  No action; information only.

- **81030012-2301ffff : Sensor [SensorElementName] has asserted. (OS RealTime Mod)**

  This message is for the use case when an implementation has detected a Sensor has asserted.

  May also be shown as 810300122301ffff or 0x810300122301ffff

  Severity
  Info

  Serviceable
  No

  Automatically notify support
  No

  Alert Category
  System - Other

  SNMP Trap ID

  CIM Information
  Prefix: PLAT **ID:** 0508

  User Response
  No action; information only.

- **81030021-0782ffff : Sensor [SensorElementName] has asserted. (PCIe Dev LK Down)**

  This message is for the use case when an implementation has detected a Sensor has asserted.

  May also be shown as 810300210782ffff or 0x810300210782ffff

  Severity
  Info

  Serviceable
  No

Automatically notify support
No

Alert Category
System - Other

SNMP Trap ID

CIM Information
Prefix: PLAT **ID:** 0508

User Response
No action; information only.

- **81030108-1301ffff : Sensor [SensorElementName] has deasserted. (PS Heavy Load)**

  This message is for the use case when an implementation has detected a Sensor has deasserted.

  May also be shown as 810301081301ffff or 0x810301081301ffff

  Severity
  Info

  Serviceable
  No

  Automatically notify support
  No

  Alert Category
  System - Other

  SNMP Trap ID

  CIM Information
  Prefix: PLAT **ID:** 0509

  User Response
  No action; information only.

- **8103010c-2581ffff : Sensor [SensorElementName] has deasserted. (Non-Auth DIMMs)**

  This message is for the use case when an implementation has detected a Sensor has deasserted.

  May also be shown as 8103010c2581ffff or 0x8103010c2581ffff

  Severity
  Info

  Serviceable
  No

  Automatically notify support
  No

  Alert Category
  System - Other

  SNMP Trap ID

  CIM Information
  Prefix: PLAT **ID:** 0509

User Response
No action; information only.

- **81030112-0601ffff : Sensor [SensorElementName] has deasserted. (SMM Mode)**

This message is for the use case when an implementation has detected a Sensor has deasserted.

May also be shown as 810301120601ffff or 0x810301120601ffff

Severity
Info

Serviceable
No

Automatically notify support
No

Alert Category
System - Other

SNMP Trap ID

CIM Information
Prefix: PLAT **ID:** 0509

User Response
No action; information only. SMM Monitor :

- **81030121-0782ffff : Sensor [SensorElementName] has deasserted. (PCIe Dev LK Down)**

This message is for the use case when an implementation has detected a Sensor has deasserted.

May also be shown as 810301210782ffff or 0x810301210782ffff

Severity
Info

Serviceable
No

Automatically notify support
No

Alert Category
System - Other

SNMP Trap ID

CIM Information
Prefix: PLAT **ID:** 0509

User Response
No action; information only.

- **81050112-0d01ffff : Sensor [SensorElementName] has indicated limit no longer exceeded. (CPU/HDD Config)**

This message is for the use case when an implementation has detected a Sensor limit is no longer exceeded.

May also be shown as 810501120d01ffff or 0x810501120d01ffff

Severity
Info

Serviceable
No

Automatically notify support
No

Alert Category
System - Other

SNMP Trap ID

CIM Information
Prefix: PLAT **ID:** 0513

User Response
No action; information only.

- **81070101-2c01ffff : Sensor [SensorElementName] has deasserted the transition from normal to non-critical state. (ML2 OverTemp)**

  This message is for the use case when an implementation has detected that a Sensor has deasserted a transition to non-critical from normal.

  May also be shown as 810701012c01ffff or 0x810701012c01ffff

  Severity
  Info

  Serviceable
  No

  Automatically notify support
  No

  Alert Category
  Warning - Temperature

  SNMP Trap ID
  12

  CIM Information
  Prefix: PLAT **ID:** 0521

  User Response
  No action; information only.

- **8107010d-2582ffff : Sensor [SensorElementName] has deasserted the transition from normal to non-critical state. (RAID Vol State)**

  This message is for the use case when an implementation has detected that a Sensor has deasserted a transition to non-critical from normal.

  May also be shown as 8107010d2582ffff or 0x8107010d2582ffff

  Severity
  Info

  Serviceable
  No

Automatically notify support
No

Alert Category
Warning - Other

SNMP Trap ID
60

CIM Information
Prefix: PLAT **ID:** 0521

User Response
No action; information only.

- **8107010f-2201ffff : Sensor [SensorElementName] has deasserted the transition from normal to non-critical state. (GPT Status)**

  This message is for the use case when an implementation has detected that a Sensor has deasserted a transition to non-critical from normal.

  May also be shown as 8107010f2201ffff or 0x8107010f2201ffff

  Severity
  Info

  Serviceable
  No

  Automatically notify support
  No

  Alert Category
  Warning - Other

  SNMP Trap ID
  60

  CIM Information
  Prefix: PLAT **ID:** 0521

  User Response
  No action; information only.

- **8107010f-2582ffff : Sensor [SensorElementName] has deasserted the transition from normal to non-critical state. (I/O Resources)**

  This message is for the use case when an implementation has detected that a Sensor has deasserted a transition to non-critical from normal.

  May also be shown as 8107010f2582ffff or 0x8107010f2582ffff

  Severity
  Info

  Serviceable
  No

  Automatically notify support
  No

  Alert Category
  Warning - Other

SNMP Trap ID
60

CIM Information
Prefix: PLAT **ID:** 0521

User Response
No action; information only.

- **81070121-0782ffff : Sensor [SensorElementName] has deasserted the transition from normal to non-critical state. (PCIe Dev Status)**

  This message is for the use case when an implementation has detected that a Sensor has deasserted a transition to non-critical from normal.

  May also be shown as 810701210782ffff or 0x810701210782ffff

  Severity
  Info

  Serviceable
  No

  Automatically notify support
  No

  Alert Category
  Warning - Other

  SNMP Trap ID
  60

  CIM Information
  Prefix: PLAT **ID:** 0521

  User Response
  No action; information only.

- **81070125-2583ffff : Sensor [SensorElementName] has deasserted the transition from normal to non-critical state. (X8 PCI 2 Config)**

  This message is for the use case when an implementation has detected that a Sensor has deasserted a transition to non-critical from normal.

  May also be shown as 810701252583ffff or 0x810701252583ffff

  Severity
  Info

  Serviceable
  No

  Automatically notify support
  No

  Alert Category
  Warning - Other

  SNMP Trap ID
  60

  CIM Information
  Prefix: PLAT **ID:** 0521

User Response
No action; information only. X8 PCI 3 Config :

- **81070128-2e01ffff : Sensor [SensorElementName] has deasserted the transition from normal to non-critical state. (ME Recovery)**

  This message is for the use case when an implementation has detected that a Sensor has deasserted a transition to non-critical from normal.

  May also be shown as 810701282e01ffff or 0x810701282e01ffff

  Severity
  Info

  Serviceable
  No

  Automatically notify support
  No

  Alert Category
  Warning - Other

  SNMP Trap ID
  60

  CIM Information
  Prefix: PLAT **ID:** 0521

  User Response
  No action; information only.

- **81070201-0301ffff : Sensor [SensorElementName] has transitioned to a less severe state from critical. (CPU 1 OverTemp)**

  This message is for the use case when an implementation has detected a Sensor transition to less severe from critical.

  May also be shown as 810702010301ffff or 0x810702010301ffff

  Severity
  Info

  Serviceable
  No

  Automatically notify support
  No

  Alert Category
  Critical - Temperature

  SNMP Trap ID
  0

  CIM Information
  Prefix: PLAT **ID:** 0523

  User Response
  No action; information only.

- **81070201-0302ffff : Sensor [SensorElementName] has transitioned to a less severe state from critical. (CPU 2 OverTemp)**

This message is for the use case when an implementation has detected a Sensor transition to less severe from critical.

May also be shown as 810702010302ffff or 0x810702010302ffff

Severity
Info

Serviceable
No

Automatically notify support
No

Alert Category
Critical - Temperature

SNMP Trap ID
0

CIM Information
Prefix: PLAT **ID:** 0523

User Response
No action; information only.

- **81070201-1101ffff : Sensor [SensorElementName] has transitioned to a less severe state from critical. (PCI 1 Temp)**

  This message is for the use case when an implementation has detected a Sensor transition to less severe from critical.

  May also be shown as 810702011101ffff or 0x810702011101ffff

  Severity
  Info

  Serviceable
  No

  Automatically notify support
  No

  Alert Category
  Critical - Temperature

  SNMP Trap ID
  0

  CIM Information
  Prefix: PLAT **ID:** 0523

  User Response
  No action; information only.

- **81070201-1102ffff : Sensor [SensorElementName] has transitioned to a less severe state from critical. (PCI 2 Temp)**

  This message is for the use case when an implementation has detected a Sensor transition to less severe from critical.

  May also be shown as 810702011102ffff or 0x810702011102ffff

Severity
Info

Serviceable
No

Automatically notify support
No

Alert Category
Critical - Temperature

SNMP Trap ID
0

CIM Information
Prefix: PLAT **ID:** 0523

User Response
No action; information only.

- **81070201-1103ffff : Sensor [SensorElementName] has transitioned to a less severe state from critical. (PCI 3 Temp)**

  This message is for the use case when an implementation has detected a Sensor transition to less severe from critical.

  May also be shown as 810702011103ffff or 0x810702011103ffff

  Severity
  Info

  Serviceable
  No

  Automatically notify support
  No

  Alert Category
  Critical - Temperature

  SNMP Trap ID
  0

  CIM Information
  Prefix: PLAT **ID:** 0523

  User Response
  No action; information only.

- **81070202-0701ffff : Sensor [SensorElementName] has transitioned to a less severe state from critical. (SysBrd Vol Fault)**

  This message is for the use case when an implementation has detected a Sensor transition to less severe from critical.

  May also be shown as 810702020701ffff or 0x810702020701ffff

  Severity
  Info

  Serviceable
  No

Automatically notify support
No

Alert Category
Critical - Voltage

SNMP Trap ID
1

CIM Information
Prefix: PLAT **ID:** 0523

User Response
No action; information only.

- **81070204-0a01ffff : Sensor [SensorElementName] has transitioned to a less severe state from critical. (PS 1 Fan Fault)**

  This message is for the use case when an implementation has detected a Sensor transition to less severe from critical.

  May also be shown as 810702040a01ffff or 0x810702040a01ffff

  Severity
  Info

  Serviceable
  No

  Automatically notify support
  No

  Alert Category
  Critical - Fan Failure

  SNMP Trap ID
  11

  CIM Information
  Prefix: PLAT **ID:** 0523

  User Response
  No action; information only.

- **81070204-0a02ffff : Sensor [SensorElementName] has transitioned to a less severe state from critical. (PS 2 Fan Fault)**

  This message is for the use case when an implementation has detected a Sensor transition to less severe from critical.

  May also be shown as 810702040a02ffff or 0x810702040a02ffff

  Severity
  Info

  Serviceable
  No

  Automatically notify support
  No

  Alert Category
  Critical - Fan Failure

SNMP Trap ID
11

CIM Information
Prefix: PLAT **ID:** 0523

User Response
No action; information only.

- **81070208-0a01ffff : Sensor [SensorElementName] has transitioned to a less severe state from critical. (PS 1 Therm Fault)**

  This message is for the use case when an implementation has detected a Sensor transition to less severe from critical.

  May also be shown as 810702080a01ffff or 0x810702080a01ffff

  Severity
  Info

  Serviceable
  No

  Automatically notify support
  No

  Alert Category
  Critical - Power

  SNMP Trap ID
  4

  CIM Information
  Prefix: PLAT **ID:** 0523

  User Response
  No action; information only.

- **81070208-0a02ffff : Sensor [SensorElementName] has transitioned to a less severe state from critical. (PS 2 Therm Fault)**

  This message is for the use case when an implementation has detected a Sensor transition to less severe from critical.

  May also be shown as 810702080a02ffff or 0x810702080a02ffff

  Severity
  Info

  Serviceable
  No

  Automatically notify support
  No

  Alert Category
  Critical - Power

  SNMP Trap ID
  4

  CIM Information
  Prefix: PLAT **ID:** 0523

User Response
No action; information only.

- **8107020d-2582ffff : Sensor [SensorElementName] has transitioned to a less severe state from critical. (RAID Vol State)**

  This message is for the use case when an implementation has detected a Sensor transition to less severe from critical.

  May also be shown as 8107020d2582ffff or 0x8107020d2582ffff

  Severity
  Info

  Serviceable
  No

  Automatically notify support
  No

  Alert Category
  Critical - Other

  SNMP Trap ID
  50

  CIM Information
  Prefix: PLAT **ID:** 0523

  User Response
  No action; information only.

- **8107020f-2201ffff : Sensor [SensorElementName] has transitioned to a less severe state from critical. (TXT ACM Module)**

  This message is for the use case when an implementation has detected a Sensor transition to less severe from critical.

  May also be shown as 8107020f2201ffff or 0x8107020f2201ffff

  Severity
  Info

  Serviceable
  No

  Automatically notify support
  No

  Alert Category
  Critical - Other

  SNMP Trap ID
  50

  CIM Information
  Prefix: PLAT **ID:** 0523

  User Response
  No action; information only.

- **8107020f-2582ffff : Sensor [SensorElementName] has transitioned to a less severe state from critical. (I/O Resources)**

This message is for the use case when an implementation has detected a Sensor transition to less severe from critical.

May also be shown as 8107020f2582ffff or 0x8107020f2582ffff

Severity
Info

Serviceable
No

Automatically notify support
No

Alert Category
Critical - Other

SNMP Trap ID
50

CIM Information
Prefix: PLAT **ID:** 0523

User Response
No action; information only.

- **81070214-2201ffff : Sensor [SensorElementName] has transitioned to a less severe state from critical. (TPM Lock)**

  This message is for the use case when an implementation has detected a Sensor transition to less severe from critical.

  May also be shown as 810702142201ffff or 0x810702142201ffff

  Severity
  Info

  Serviceable
  No

  Automatically notify support
  No

  Alert Category
  Critical - Other

  SNMP Trap ID
  50

  CIM Information
  Prefix: PLAT **ID:** 0523

  User Response
  No action; information only.

- **81070219-0701ffff : Sensor [SensorElementName] has transitioned to a less severe state from critical. (SysBrd Fault)**

  This message is for the use case when an implementation has detected a Sensor transition to less severe from critical.

  May also be shown as 810702190701ffff or 0x810702190701ffff

Severity
Info

Serviceable
No

Automatically notify support
No

Alert Category
Critical - Other

SNMP Trap ID
50

CIM Information
Prefix: PLAT **ID:** 0523

User Response
No action; information only.

- **8107021b-0301ffff : Sensor [SensorElementName] has transitioned to a less severe state from critical. (CPU 1 QPILinkErr)**

  This message is for the use case when an implementation has detected a Sensor transition to less severe from critical.

  May also be shown as 8107021b0301ffff or 0x8107021b0301ffff

  Severity
  Info

  Serviceable
  No

  Automatically notify support
  No

  Alert Category
  Critical - Other

  SNMP Trap ID
  50

  CIM Information
  Prefix: PLAT **ID:** 0523

  User Response
  No action; information only.

- **8107021b-0302ffff : Sensor [SensorElementName] has transitioned to a less severe state from critical. (CPU 2 QPILinkErr)**

  This message is for the use case when an implementation has detected a Sensor transition to less severe from critical.

  May also be shown as 8107021b0302ffff or 0x8107021b0302ffff

  Severity
  Info

  Serviceable
  No

Automatically notify support
No

Alert Category
Critical - Other

SNMP Trap ID
50

CIM Information
Prefix: PLAT **ID:** 0523

User Response
No action; information only.

- **81070221-0782ffff : Sensor [SensorElementName] has transitioned to a less severe state from critical. (PCIe Dev Status)**

  This message is for the use case when an implementation has detected a Sensor transition to less severe from critical.

  May also be shown as 810702210782ffff or 0x810702210782ffff

  Severity
  Info

  Serviceable
  No

  Automatically notify support
  No

  Alert Category
  Critical - Other

  SNMP Trap ID
  50

  CIM Information
  Prefix: PLAT **ID:** 0523

  User Response
  No action; information only.

- **81070228-2e01ffff : Sensor [SensorElementName] has transitioned to a less severe state from critical. (IPMB IO Error)**

  This message is for the use case when an implementation has detected a Sensor transition to less severe from critical.

  May also be shown as 810702282e01ffff or 0x810702282e01ffff

  Severity
  Info

  Serviceable
  No

  Automatically notify support
  No

  Alert Category
  Critical - Other

SNMP Trap ID
50

CIM Information
Prefix: PLAT **ID:** 0523

User Response
No action; information only. ME Error : ME Flash Error :

- **81070301-0301ffff : Sensor [SensorElementName] has deasserted the transition to non-recoverable from a less severe state. (CPU 1 OverTemp)**

  This message is for the use case when an implementation has detected that the Sensor transition to non-recoverable from less severe has deasserted.

  May also be shown as 810703010301ffff or 0x810703010301ffff

  Severity
  Info

  Serviceable
  No

  Automatically notify support
  No

  Alert Category
  Critical - Temperature

  SNMP Trap ID
  0

  CIM Information
  Prefix: PLAT **ID:** 0525

  User Response
  No action; information only.

- **81070301-0302ffff : Sensor [SensorElementName] has deasserted the transition to non-recoverable from a less severe state. (CPU 2 OverTemp)**

  This message is for the use case when an implementation has detected that the Sensor transition to non-recoverable from less severe has deasserted.

  May also be shown as 810703010302ffff or 0x810703010302ffff

  Severity
  Info

  Serviceable
  No

  Automatically notify support
  No

  Alert Category
  Critical - Temperature

  SNMP Trap ID
  0

  CIM Information
  Prefix: PLAT **ID:** 0525

User Response
No action; information only.

- **81070301-1101ffff : Sensor [SensorElementName] has deasserted the transition to non-recoverable from a less severe state. (PCI 1 Temp)**

  This message is for the use case when an implementation has detected that the Sensor transition to non-recoverable from less severe has deasserted.

  May also be shown as 810703011101ffff or 0x810703011101ffff

  Severity
  Info

  Serviceable
  No

  Automatically notify support
  No

  Alert Category
  Critical - Temperature

  SNMP Trap ID
  0

  CIM Information
  Prefix: PLAT **ID:** 0525

  User Response
  No action; information only.

- **81070301-1102ffff : Sensor [SensorElementName] has deasserted the transition to non-recoverable from a less severe state. (PCI 2 Temp)**

  This message is for the use case when an implementation has detected that the Sensor transition to non-recoverable from less severe has deasserted.

  May also be shown as 810703011102ffff or 0x810703011102ffff

  Severity
  Info

  Serviceable
  No

  Automatically notify support
  No

  Alert Category
  Critical - Temperature

  SNMP Trap ID
  0

  CIM Information
  Prefix: PLAT **ID:** 0525

  User Response
  No action; information only.

- **81070301-1103ffff : Sensor [SensorElementName] has deasserted the transition to non-recoverable from a less severe state. (PCI 3 Temp)**

This message is for the use case when an implementation has detected that the Sensor transition to non-recoverable from less severe has deasserted.

May also be shown as 810703011103ffff or 0x810703011103ffff

Severity
Info

Serviceable
No

Automatically notify support
No

Alert Category
Critical - Temperature

SNMP Trap ID
0

CIM Information
Prefix: PLAT **ID:** 0525

User Response
No action; information only.

- **81070301-2c01ffff : Sensor [SensorElementName] has deasserted the transition to non-recoverable from a less severe state. (ML2 OverTemp)**

  This message is for the use case when an implementation has detected that the Sensor transition to non-recoverable from less severe has deasserted.

  May also be shown as 810703012c01ffff or 0x810703012c01ffff

  Severity
  Info

  Serviceable
  No

  Automatically notify support
  No

  Alert Category
  Critical - Temperature

  SNMP Trap ID
  0

  CIM Information
  Prefix: PLAT **ID:** 0525

  User Response
  No action; information only.

- **8107030d-2582ffff : Sensor [SensorElementName] has deasserted the transition to non-recoverable from a less severe state. (RAID Vol State)**

  This message is for the use case when an implementation has detected that the Sensor transition to non-recoverable from less severe has deasserted.

  May also be shown as 8107030d2582ffff or 0x8107030d2582ffff

Severity
Info

Serviceable
No

Automatically notify support
No

Alert Category
Critical - Other

SNMP Trap ID
50

CIM Information
Prefix: PLAT **ID:** 0525

User Response
No action; information only.

- **81070608-0a01ffff : Sensor [SensorElementName] has deasserted the transition to non-recoverable. (PS1 12V OC Fault)**

  This message is for the use case when an implementation has detected that the Sensor transition to non-recoverable has deasserted.

  May also be shown as 810706080a01ffff or 0x810706080a01ffff

  Severity
  Info

  Serviceable
  No

  Automatically notify support
  No

  Alert Category
  Critical - Power

  SNMP Trap ID
  4

  CIM Information
  Prefix: PLAT **ID:** 0531

  User Response
  No action; information only. PS1 12V OV Fault : PS1 12V UV Fault : PS1 12Vaux Fault :

- **81070608-0a02ffff : Sensor [SensorElementName] has deasserted the transition to non-recoverable. (PS2 12V OC Fault)**

  This message is for the use case when an implementation has detected that the Sensor transition to non-recoverable has deasserted.

  May also be shown as 810706080a02ffff or 0x810706080a02ffff

  Severity
  Info

  Serviceable
  No

Automatically notify support
No

Alert Category
Critical - Power

SNMP Trap ID
4

CIM Information
Prefix: PLAT **ID:** 0531

User Response
No action; information only. PS2 12V OV Fault : PS2 12V UV Fault : PS2 12Vaux Fault :

- **81070625-2583ffff : Sensor [SensorElementName] has deasserted the transition to non-recoverable. (X8 PCI 2 Config)**

  This message is for the use case when an implementation has detected that the Sensor transition to non-recoverable has deasserted.

  May also be shown as 810706252583ffff or 0x810706252583ffff

  Severity
  Info

  Serviceable
  No

  Automatically notify support
  No

  Alert Category
  Critical - Other

  SNMP Trap ID
  50

  CIM Information
  Prefix: PLAT **ID:** 0531

  User Response
  No action; information only. X8 PCI 3 Config :

- **810b010a-1e81ffff : Redundancy Lost for [RedundancySetElementName] has deasserted. (Fan Zone 1)**

  This message is for the use case when Redundancy Lost has deasserted.

  May also be shown as 810b010a1e81ffff or 0x810b010a1e81ffff

  Severity
  Info

  Serviceable
  No

  Automatically notify support
  No

  Alert Category
  Critical - Fan Failure

  SNMP Trap ID

11

CIM Information
Prefix: PLAT **ID:** 0803

User Response
No action; information only.

- **810b010a-1e82ffff : Redundancy Lost for [RedundancySetElementName] has deasserted. (Fan Zone 2)**

  This message is for the use case when Redundancy Lost has deasserted.

  May also be shown as 810b010a1e82ffff or 0x810b010a1e82ffff

  Severity
  Info

  Serviceable
  No

  Automatically notify support
  No

  Alert Category
  Critical - Fan Failure

  SNMP Trap ID
  11

  CIM Information
  Prefix: PLAT **ID:** 0803

  User Response
  No action; information only.

- **810b010c-2581ffff : Redundancy Lost for [RedundancySetElementName] has deasserted. (Backup Memory)**

  This message is for the use case when Redundancy Lost has deasserted.

  May also be shown as 810b010c2581ffff or 0x810b010c2581ffff

  Severity
  Info

  Serviceable
  No

  Automatically notify support
  No

  Alert Category
  Critical - Memory

  SNMP Trap ID
  41

  CIM Information
  Prefix: PLAT **ID:** 0803

  User Response
  No action; information only.

- **810b0309-1301ffff : Non-redundant:Sufficient Resources from Redundancy Degraded or Fully Redundant for [RedundancySetElementName] has deasserted. (Power Resource)**

  This message is for the use case when a Redundancy Set has transitioned from Non-redundant:Sufficient Resources.

  May also be shown as 810b03091301ffff or 0x810b03091301ffff

  Severity
  Info

  Serviceable
  No

  Automatically notify support
  No

  Alert Category
  Warning - Redundant Power Supply

  SNMP Trap ID
  10

  CIM Information
  Prefix: PLAT **ID:** 0807

  User Response
  No action; information only.

- **810b030c-2581ffff : Non-redundant:Sufficient Resources from Redundancy Degraded or Fully Redundant for [RedundancySetElementName] has deasserted. (Backup Memory)**

  This message is for the use case when a Redundancy Set has transitioned from Non-redundant:Sufficient Resources.

  May also be shown as 810b030c2581ffff or 0x810b030c2581ffff

  Severity
  Info

  Serviceable
  No

  Automatically notify support
  No

  Alert Category
  Warning - Memory

  SNMP Trap ID
  43

  CIM Information
  Prefix: PLAT **ID:** 0807

  User Response
  No action; information only.

- **810b0509-1301ffff : Non-redundant:Insufficient Resources for [RedundancySetElementName] has deasserted. (Power Resource)**

  This message is for the use case when a Redundancy Set has transitioned from Non-redundant: Insufficient Resources.

May also be shown as 810b05091301ffff or 0x810b05091301ffff

Severity
Info

Serviceable
No

Automatically notify support
No

Alert Category
Critical - Redundant Power Supply

SNMP Trap ID
9

CIM Information
Prefix: PLAT **ID:** 0811

User Response
No action; information only.

- **810b050a-1e81ffff : Non-redundant:Insufficient Resources for [RedundancySetElementName] has deasserted. (Fan Zone 1)**

  This message is for the use case when a Redundancy Set has transitioned from Non-redundant: Insufficient Resources.

  May also be shown as 810b050a1e81ffff or 0x810b050a1e81ffff

  Severity
  Info

  Serviceable
  No

  Automatically notify support
  No

  Alert Category
  Critical - Fan Failure

  SNMP Trap ID
  11

  CIM Information
  Prefix: PLAT **ID:** 0811

  User Response
  No action; information only.

- **810b050a-1e82ffff : Non-redundant:Insufficient Resources for [RedundancySetElementName] has deasserted. (Fan Zone 2)**

  This message is for the use case when a Redundancy Set has transitioned from Non-redundant: Insufficient Resources.

  May also be shown as 810b050a1e82ffff or 0x810b050a1e82ffff

  Severity
  Info

  Serviceable

No

Automatically notify support
No

Alert Category
Critical - Fan Failure

SNMP Trap ID
11

CIM Information
Prefix: PLAT **ID:** 0811

User Response
No action; information only.

- **810b050c-2581ffff : Non-redundant:Insufficient Resources for [RedundancySetElementName] has deasserted. (Backup Memory)**

  This message is for the use case when a Redundancy Set has transitioned from Non-redundant: Insufficient Resources.

  May also be shown as 810b050c2581ffff or 0x810b050c2581ffff

  Severity
  Info

  Serviceable
  No

  Automatically notify support
  No

  Alert Category
  Critical - Memory

  SNMP Trap ID
  41

  CIM Information
  Prefix: PLAT **ID:** 0811

  User Response
  No action; information only.

- **816f0007-0301ffff : [ProcessorElementName] has Recovered from IERR. (CPU 1)**

  This message is for the use case when an implementation has detected a Processor Recovered - IERR Condition.

  May also be shown as 816f00070301ffff or 0x816f00070301ffff

  Severity
  Info

  Serviceable
  No

  Automatically notify support
  No

  Alert Category
  Critical - CPU

SNMP Trap ID
40

CIM Information
Prefix: PLAT **ID:** 0043

User Response
No action; information only.

- **816f0007-0302ffff : [ProcessorElementName] has Recovered from IERR. (CPU 2)**

This message is for the use case when an implementation has detected a Processor Recovered - IERR Condition.

May also be shown as 816f00070302ffff or 0x816f00070302ffff

Severity
Info

Serviceable
No

Automatically notify support
No

Alert Category
Critical - CPU

SNMP Trap ID
40

CIM Information
Prefix: PLAT **ID:** 0043

User Response
No action; information only.

- **816f0008-0a01ffff : [PowerSupplyElementName] has been removed from container [PhysicalPackageElementName]. (Power Supply 1)**

This message is for the use case when an implementation has detected a Power Supply has been removed.

May also be shown as 816f00080a01ffff or 0x816f00080a01ffff

Severity
Info

Serviceable
No

Automatically notify support
No

Alert Category
System - Other

SNMP Trap ID

CIM Information
Prefix: PLAT **ID:** 0085

User Response

No action; information only.

- **816f0008-0a02ffff : [PowerSupplyElementName] has been removed from container [PhysicalPackageElementName]. (Power Supply 2)**

  This message is for the use case when an implementation has detected a Power Supply has been removed.

  May also be shown as 816f00080a02ffff or 0x816f00080a02ffff

  Severity
  Info

  Serviceable
  No

  Automatically notify support
  No

  Alert Category
  System - Other

  SNMP Trap ID

  CIM Information
  Prefix: PLAT **ID:** 0085

  User Response
  No action; information only.

- **816f0009-1301ffff : [PowerSupplyElementName] has been turned on. (Host Power)**

  This message is for the use case when an implementation has detected a Power Unit that has been Enabled.

  May also be shown as 816f00091301ffff or 0x816f00091301ffff

  Severity
  Info

  Serviceable
  No

  Automatically notify support
  No

  Alert Category
  System - Power On

  SNMP Trap ID
  24

  CIM Information
  Prefix: PLAT **ID:** 0107

  User Response
  No action; information only.

- **816f000d-0400ffff : The Drive [StorageVolumeElementName] has been removed from unit [PhysicalPackageElementName]. (Drive 0)**

  This message is for the use case when an implementation has detected a Drive has been Removed.

May also be shown as 816f000d0400ffff or 0x816f000d0400ffff

Severity
Info

Serviceable
Yes

Automatically notify support
No

Alert Category
System - Other

SNMP Trap ID
22

CIM Information
Prefix: PLAT **ID:** 0163

User Response

1. Reseat hard disk drive n.(n = hard disk drive number). Wait 1 minute or more before reinstalling the drive.
2. Replace the hard disk drive.
3. Make sure that the disk firmware and RAID controller firmware are at the latest level.
4. Check the SAS cable.

- **816f000d-0401ffff : The Drive [StorageVolumeElementName] has been removed from unit [PhysicalPackageElementName]. (Drive 1)**

This message is for the use case when an implementation has detected a Drive has been Removed.

May also be shown as 816f000d0401ffff or 0x816f000d0401ffff

Severity
Info

Serviceable
Yes

Automatically notify support
No

Alert Category
System - Other

SNMP Trap ID
22

CIM Information
Prefix: PLAT **ID:** 0163

User Response

1. Reseat hard disk drive n.(n = hard disk drive number). Wait 1 minute or more before reinstalling the drive.
2. Replace the hard disk drive.
3. Make sure that the disk firmware and RAID controller firmware are at the latest level.
4. Check the SAS cable.

- **816f000d-0402ffff : The Drive [StorageVolumeElementName] has been removed from unit [PhysicalPackageElementName]. (Drive 2)**

  This message is for the use case when an implementation has detected a Drive has been Removed.

  May also be shown as 816f000d0402ffff or 0x816f000d0402ffff

  Severity
  Info

  Serviceable
  Yes

  Automatically notify support
  No

  Alert Category
  System - Other

  SNMP Trap ID
  22

  CIM Information
  Prefix: PLAT **ID:** 0163

  User Response

  1. Reseat hard disk drive n.(n = hard disk drive number). Wait 1 minute or more before reinstalling the drive.
  2. Replace the hard disk drive.
  3. Make sure that the disk firmware and RAID controller firmware are at the latest level.
  4. Check the SAS cable.

- **816f000d-0403ffff : The Drive [StorageVolumeElementName] has been removed from unit [PhysicalPackageElementName]. (Drive 3)**

  This message is for the use case when an implementation has detected a Drive has been Removed.

  May also be shown as 816f000d0403ffff or 0x816f000d0403ffff

  Severity
  Info

  Serviceable
  Yes

  Automatically notify support
  No

  Alert Category
  System - Other

  SNMP Trap ID
  22

  CIM Information
  Prefix: PLAT **ID:** 0163

  User Response

  1. Reseat hard disk drive n.(n = hard disk drive number). Wait 1 minute or more before reinstalling the drive.
  2. Replace the hard disk drive.

3. Make sure that the disk firmware and RAID controller firmware are at the latest level.
4. Check the SAS cable.

- **816f000d-0404ffff : The Drive [StorageVolumeElementName] has been removed from unit [PhysicalPackageElementName]. (Drive 4)**

  This message is for the use case when an implementation has detected a Drive has been Removed.

  May also be shown as 816f000d0404ffff or 0x816f000d0404ffff

  Severity
  Info

  Serviceable
  Yes

  Automatically notify support
  No

  Alert Category
  System - Other

  SNMP Trap ID
  22

  CIM Information
  Prefix: PLAT **ID:** 0163

  User Response

  1. Reseat hard disk drive n.(n = hard disk drive number). Wait 1 minute or more before reinstalling the drive.
  2. Replace the hard disk drive.
  3. Make sure that the disk firmware and RAID controller firmware are at the latest level.
  4. Check the SAS cable.

- **816f000d-0405ffff : The Drive [StorageVolumeElementName] has been removed from unit [PhysicalPackageElementName]. (Drive 5)**

  This message is for the use case when an implementation has detected a Drive has been Removed.

  May also be shown as 816f000d0405ffff or 0x816f000d0405ffff

  Severity
  Info

  Serviceable
  Yes

  Automatically notify support
  No

  Alert Category
  System - Other

  SNMP Trap ID
  22

  CIM Information
  Prefix: PLAT **ID:** 0163

  User Response

1. Reseat hard disk drive n.(n = hard disk drive number). Wait 1 minute or more before reinstalling the drive.
2. Replace the hard disk drive.
3. Make sure that the disk firmware and RAID controller firmware are at the latest level.
4. Check the SAS cable.

- **816f000d-0406ffff : The Drive [StorageVolumeElementName] has been removed from unit [PhysicalPackageElementName]. (Drive 6)**

  This message is for the use case when an implementation has detected a Drive has been Removed.

  May also be shown as 816f000d0406ffff or 0x816f000d0406ffff

  Severity
  Info

  Serviceable
  Yes

  Automatically notify support
  No

  Alert Category
  System - Other

  SNMP Trap ID
  22

  CIM Information
  Prefix: PLAT **ID:** 0163

  User Response

  1. Reseat hard disk drive n.(n = hard disk drive number). Wait 1 minute or more before reinstalling the drive.
  2. Replace the hard disk drive.
  3. Make sure that the disk firmware and RAID controller firmware are at the latest level.
  4. Check the SAS cable.

- **816f000d-0407ffff : The Drive [StorageVolumeElementName] has been removed from unit [PhysicalPackageElementName]. (Drive 7)**

  This message is for the use case when an implementation has detected a Drive has been Removed.

  May also be shown as 816f000d0407ffff or 0x816f000d0407ffff

  Severity
  Info

  Serviceable
  Yes

  Automatically notify support
  No

  Alert Category
  System - Other

  SNMP Trap ID
  22

CIM Information
Prefix: PLAT **ID:** 0163

User Response

1. Reseat hard disk drive n.(n = hard disk drive number). Wait 1 minute or more before reinstalling the drive.
2. Replace the hard disk drive.
3. Make sure that the disk firmware and RAID controller firmware are at the latest level.
4. Check the SAS cable.

- **816f000d-0408ffff : The Drive [StorageVolumeElementName] has been removed from unit [PhysicalPackageElementName]. (Drive 8)**

This message is for the use case when an implementation has detected a Drive has been Removed.

May also be shown as 816f000d0408ffff or 0x816f000d0408ffff

Severity
Info

Serviceable
Yes

Automatically notify support
No

Alert Category
System - Other

SNMP Trap ID
22

CIM Information
Prefix: PLAT **ID:** 0163

User Response

1. Reseat hard disk drive n.(n = hard disk drive number). Wait 1 minute or more before reinstalling the drive.
2. Replace the hard disk drive.
3. Make sure that the disk firmware and RAID controller firmware are at the latest level.
4. Check the SAS cable.

- **816f000d-0409ffff : The Drive [StorageVolumeElementName] has been removed from unit [PhysicalPackageElementName]. (Drive 9)**

This message is for the use case when an implementation has detected a Drive has been Removed.

May also be shown as 816f000d0409ffff or 0x816f000d0409ffff

Severity
Info

Serviceable
Yes

Automatically notify support
No

Alert Category

System - Other

SNMP Trap ID
22

CIM Information
Prefix: PLAT **ID:** 0163

User Response

1. Reseat hard disk drive n.(n = hard disk drive number). Wait 1 minute or more before reinstalling the drive.
2. Replace the hard disk drive.
3. Make sure that the disk firmware and RAID controller firmware are at the latest level.
4. Check the SAS cable.

- **816f000d-040affff : The Drive [StorageVolumeElementName] has been removed from unit [PhysicalPackageElementName]. (Drive 10)**

This message is for the use case when an implementation has detected a Drive has been Removed.

May also be shown as 816f000d040affff or 0x816f000d040affff

Severity
Info

Serviceable
Yes

Automatically notify support
No

Alert Category
System - Other

SNMP Trap ID
22

CIM Information
Prefix: PLAT **ID:** 0163

User Response

1. Reseat hard disk drive n.(n = hard disk drive number). Wait 1 minute or more before reinstalling the drive.
2. Replace the hard disk drive.
3. Make sure that the disk firmware and RAID controller firmware are at the latest level.
4. Check the SAS cable.

- **816f000d-040bffff : The Drive [StorageVolumeElementName] has been removed from unit [PhysicalPackageElementName]. (Drive 11)**

This message is for the use case when an implementation has detected a Drive has been Removed.

May also be shown as 816f000d040bffff or 0x816f000d040bffff

Severity
Info

Serviceable
Yes

Automatically notify support
No

Alert Category
System - Other

SNMP Trap ID
22

CIM Information
Prefix: PLAT **ID:** 0163

User Response

1. Reseat hard disk drive n.(n = hard disk drive number). Wait 1 minute or more before reinstalling the drive.
2. Replace the hard disk drive.
3. Make sure that the disk firmware and RAID controller firmware are at the latest level.
4. Check the SAS cable.

- **816f000d-040cffff : The Drive [StorageVolumeElementName] has been removed from unit [PhysicalPackageElementName]. (Drive 12)**

This message is for the use case when an implementation has detected a Drive has been Removed.

May also be shown as 816f000d040cffff or 0x816f000d040cffff

Severity
Info

Serviceable
Yes

Automatically notify support
No

Alert Category
System - Other

SNMP Trap ID
22

CIM Information
Prefix: PLAT **ID:** 0163

User Response

1. Reseat hard disk drive n.(n = hard disk drive number). Wait 1 minute or more before reinstalling the drive.
2. Replace the hard disk drive.
3. Make sure that the disk firmware and RAID controller firmware are at the latest level.
4. Check the SAS cable.

- **816f000d-040dffff : The Drive [StorageVolumeElementName] has been removed from unit [PhysicalPackageElementName]. (Drive 13)**

This message is for the use case when an implementation has detected a Drive has been Removed.

May also be shown as 816f000d040dffff or 0x816f000d040dffff

Severity

Info

Serviceable
Yes

Automatically notify support
No

Alert Category
System - Other

SNMP Trap ID
22

CIM Information
Prefix: PLAT **ID:** 0163

User Response

1. Reseat hard disk drive n.(n = hard disk drive number). Wait 1 minute or more before reinstalling the drive.
2. Make sure that the disk firmware and RAID controller and backplane firmware are at the latest level.
3. Check the SAS cable.

- **816f000d-0410ffff : The Drive [StorageVolumeElementName] has been removed from unit [PhysicalPackageElementName]. (Ext Drive)**

  This message is for the use case when an implementation has detected a Drive has been Removed.

  May also be shown as 816f000d0410ffff or 0x816f000d0410ffff

  Severity
  Info

  Serviceable
  Yes

  Automatically notify support
  No

  Alert Category
  System - Other

  SNMP Trap ID
  22

  CIM Information
  Prefix: PLAT **ID:** 0163

  User Response

  1. Reseat hard disk drive n.(n = hard disk drive number). Wait 1 minute or more before reinstalling the drive.
  2. Replace the hard disk drive.
  3. Make sure that the disk firmware and RAID controller firmware are at the latest level.
  4. Check the SAS cable.

- **816f000f-2201ffff : The System [ComputerSystemElementName] has detected a POST Error deassertion. (ABR Status)**

  This message is for the use case when an implementation has detected that Post Error has deasserted.

May also be shown as 816f000f2201ffff or 0x816f000f2201ffff

Severity
Info

Serviceable
No

Automatically notify support
No

Alert Category
Critical - Other

SNMP Trap ID
50

CIM Information
Prefix: PLAT **ID:** 0185

User Response
No action; information only. Firmware Error : Sys Boot Status : X8 PCI 2 Firm : X8 PCI 3 Firm :

- **816f0013-1701ffff : System [ComputerSystemElementName] has recovered from a diagnostic interrupt. (NMI State)**

  This message is for the use case when an implementation has detected a recovery from a Front Panel NMI / Diagnostic Interrupt

  May also be shown as 816f00131701ffff or 0x816f00131701ffff

  Severity
  Info

  Serviceable
  No

  Automatically notify support
  No

  Alert Category
  Critical - Other

  SNMP Trap ID
  50

  CIM Information
  Prefix: PLAT **ID:** 0223

  User Response
  No action; information only.

- **816f0021-2201ffff : Fault condition removed on slot [PhysicalConnectorElementName] on system [ComputerSystemElementName]. (No Op ROM Space)**

  This message is for the use case when an implementation has detected a Fault condition in a slot has been removed.

  May also be shown as 816f00212201ffff or 0x816f00212201ffff

  Severity
  Info

  Serviceable

No

Automatically notify support
No

Alert Category
Critical - Other

SNMP Trap ID
50

CIM Information
Prefix: PLAT **ID:** 0331

User Response
No action; information only.

- **816f0021-2582ffff : Fault condition removed on slot [PhysicalConnectorElementName] on system [ComputerSystemElementName]. (All PCI Error)**

  This message is for the use case when an implementation has detected a Fault condition in a slot has been removed.

  May also be shown as 816f00212582ffff or 0x816f00212582ffff

  Severity
  Info

  Serviceable
  No

  Automatically notify support
  No

  Alert Category
  Critical - Other

  SNMP Trap ID
  50

  CIM Information
  Prefix: PLAT **ID:** 0331

  User Response
  No action; information only. One of PCI Errors :

- **816f0021-2c01ffff : Fault condition removed on slot [PhysicalConnectorElementName] on system [ComputerSystemElementName]. (ML2 Card Fault)**

  This message is for the use case when an implementation has detected a Fault condition in a slot has been removed.

  May also be shown as 816f00212c01ffff or 0x816f00212c01ffff

  Severity
  Info

  Serviceable
  No

  Automatically notify support
  No

  Alert Category

Critical - Other

SNMP Trap ID
50

CIM Information
Prefix: PLAT **ID:** 0331

User Response
No action; information only.

- **816f0021-3001ffff : Fault condition removed on slot [PhysicalConnectorElementName] on system [ComputerSystemElementName]. (Internal RAID)**

  This message is for the use case when an implementation has detected a Fault condition in a slot has been removed.

  May also be shown as 816f00213001ffff or 0x816f00213001ffff

  Severity
  Info

  Serviceable
  No

  Automatically notify support
  No

  Alert Category
  Critical - Other

  SNMP Trap ID
  50

  CIM Information
  Prefix: PLAT **ID:** 0331

  User Response
  No action; information only. PCI 1 :

- **816f0021-3002ffff : Fault condition removed on slot [PhysicalConnectorElementName] on system [ComputerSystemElementName]. (PCI 2)**

  This message is for the use case when an implementation has detected a Fault condition in a slot has been removed.

  May also be shown as 816f00213002ffff or 0x816f00213002ffff

  Severity
  Info

  Serviceable
  No

  Automatically notify support
  No

  Alert Category
  Critical - Other

  SNMP Trap ID
  50

  CIM Information

Prefix: PLAT **ID:** 0331

User Response
No action; information only.

- **816f0021-3003ffff : Fault condition removed on slot [PhysicalConnectorElementName] on system [ComputerSystemElementName]. (PCI 3)**

  This message is for the use case when an implementation has detected a Fault condition in a slot has been removed.

  May also be shown as 816f00213003ffff or 0x816f00213003ffff

  Severity
  Info

  Serviceable
  No

  Automatically notify support
  No

  Alert Category
  Critical - Other

  SNMP Trap ID
  50

  CIM Information
  Prefix: PLAT **ID:** 0331

  User Response
  No action; information only.

- **816f0028-2101ffff : Sensor [SensorElementName] has returned to normal on management system [ComputerSystemElementName]. (TPM Cmd Failures)**

  This message is for the use case when an implementation has detected a Sensor returned from degraded/unavailable/failure.

  May also be shown as 816f00282101ffff or 0x816f00282101ffff

  Severity
  Info

  Serviceable
  No

  Automatically notify support
  No

  Alert Category
  Warning - Other

  SNMP Trap ID
  60

  CIM Information
  Prefix: PLAT **ID:** 0399

  User Response
  No action; information only.

- **816f0107-0301ffff : An Over-Temperature Condition has been removed on [ProcessorElementName]. (CPU 1)**

  This message is for the use case when an implementation has detected a Over-Temperature Condition has been Removed for Processor.

  May also be shown as 816f01070301ffff or 0x816f01070301ffff

  Severity
  Info

  Serviceable
  No

  Automatically notify support
  No

  Alert Category
  Critical - Temperature

  SNMP Trap ID
  0

  CIM Information
  Prefix: PLAT **ID:** 0037

  User Response
  No action; information only.

- **816f0107-0302ffff : An Over-Temperature Condition has been removed on [ProcessorElementName]. (CPU 2)**

  This message is for the use case when an implementation has detected a Over-Temperature Condition has been Removed for Processor.

  May also be shown as 816f01070302ffff or 0x816f01070302ffff

  Severity
  Info

  Serviceable
  No

  Automatically notify support
  No

  Alert Category
  Critical - Temperature

  SNMP Trap ID
  0

  CIM Information
  Prefix: PLAT **ID:** 0037

  User Response
  No action; information only.

- **816f0108-0a01ffff : [PowerSupplyElementName] has returned to OK status. (Power Supply 1)**

  This message is for the use case when an implementation has detected a Power Supply return to normal operational status.

  May also be shown as 816f01080a01ffff or 0x816f01080a01ffff

Severity
Info

Serviceable
No

Automatically notify support
No

Alert Category
Critical - Power

SNMP Trap ID
4

CIM Information
Prefix: PLAT **ID:** 0087

User Response
No action; information only.

- **816f0108-0a02ffff : [PowerSupplyElementName] has returned to OK status. (Power Supply 2)**

  This message is for the use case when an implementation has detected a Power Supply return to normal operational status.

  May also be shown as 816f01080a02ffff or 0x816f01080a02ffff

  Severity
  Info

  Serviceable
  No

  Automatically notify support
  No

  Alert Category
  Critical - Power

  SNMP Trap ID
  4

  CIM Information
  Prefix: PLAT **ID:** 0087

  User Response
  No action; information only.

- **816f010c-2001ffff : Uncorrectable error recovery detected for [PhysicalMemoryElementName] on Subsystem [MemoryElementName]. (DIMM 1)**

  This message is for the use case when an implementation has detected a Memory uncorrectable error recovery.

  May also be shown as 816f010c2001ffff or 0x816f010c2001ffff

  Severity
  Info

  Serviceable
  No

  Automatically notify support

No

Alert Category
Critical - Memory

SNMP Trap ID
41

CIM Information
Prefix: PLAT **ID:** 0139

User Response
No action; information only.

- **816f010c-2002ffff : Uncorrectable error recovery detected for [PhysicalMemoryElementName] on Subsystem [MemoryElementName]. (DIMM 2)**

  This message is for the use case when an implementation has detected a Memory uncorrectable error recovery.

  May also be shown as 816f010c2002ffff or 0x816f010c2002ffff

  Severity
  Info

  Serviceable
  No

  Automatically notify support
  No

  Alert Category
  Critical - Memory

  SNMP Trap ID
  41

  CIM Information
  Prefix: PLAT **ID:** 0139

  User Response
  No action; information only.

- **816f010c-2003ffff : Uncorrectable error recovery detected for [PhysicalMemoryElementName] on Subsystem [MemoryElementName]. (DIMM 3)**

  This message is for the use case when an implementation has detected a Memory uncorrectable error recovery.

  May also be shown as 816f010c2003ffff or 0x816f010c2003ffff

  Severity
  Info

  Serviceable
  No

  Automatically notify support
  No

  Alert Category
  Critical - Memory

  SNMP Trap ID

41

CIM Information
Prefix: PLAT **ID:** 0139

User Response
No action; information only.

- **816f010c-2004ffff : Uncorrectable error recovery detected for [PhysicalMemoryElementName] on Subsystem [MemoryElementName]. (DIMM 4)**

  This message is for the use case when an implementation has detected a Memory uncorrectable error recovery.

  May also be shown as 816f010c2004ffff or 0x816f010c2004ffff

  Severity
  Info

  Serviceable
  No

  Automatically notify support
  No

  Alert Category
  Critical - Memory

  SNMP Trap ID
  41

  CIM Information
  Prefix: PLAT **ID:** 0139

  User Response
  No action; information only.

- **816f010c-2005ffff : Uncorrectable error recovery detected for [PhysicalMemoryElementName] on Subsystem [MemoryElementName]. (DIMM 5)**

  This message is for the use case when an implementation has detected a Memory uncorrectable error recovery.

  May also be shown as 816f010c2005ffff or 0x816f010c2005ffff

  Severity
  Info

  Serviceable
  No

  Automatically notify support
  No

  Alert Category
  Critical - Memory

  SNMP Trap ID
  41

  CIM Information
  Prefix: PLAT **ID:** 0139

  User Response

No action; information only.

- **816f010c-2006ffff : Uncorrectable error recovery detected for [PhysicalMemoryElementName] on Subsystem [MemoryElementName]. (DIMM 6)**

  This message is for the use case when an implementation has detected a Memory uncorrectable error recovery.

  May also be shown as 816f010c2006ffff or 0x816f010c2006ffff

  Severity
  Info

  Serviceable
  No

  Automatically notify support
  No

  Alert Category
  Critical - Memory

  SNMP Trap ID
  41

  CIM Information
  Prefix: PLAT **ID:** 0139

  User Response
  No action; information only.

- **816f010c-2007ffff : Uncorrectable error recovery detected for [PhysicalMemoryElementName] on Subsystem [MemoryElementName]. (DIMM 7)**

  This message is for the use case when an implementation has detected a Memory uncorrectable error recovery.

  May also be shown as 816f010c2007ffff or 0x816f010c2007ffff

  Severity
  Info

  Serviceable
  No

  Automatically notify support
  No

  Alert Category
  Critical - Memory

  SNMP Trap ID
  41

  CIM Information
  Prefix: PLAT **ID:** 0139

  User Response
  No action; information only.

- **816f010c-2008ffff : Uncorrectable error recovery detected for [PhysicalMemoryElementName] on Subsystem [MemoryElementName]. (DIMM 8)**

This message is for the use case when an implementation has detected a Memory uncorrectable error recovery.

May also be shown as 816f010c2008ffff or 0x816f010c2008ffff

Severity
Info

Serviceable
No

Automatically notify support
No

Alert Category
Critical - Memory

SNMP Trap ID
41

CIM Information
Prefix: PLAT **ID:** 0139

User Response
No action; information only.

- **816f010c-2009ffff : Uncorrectable error recovery detected for [PhysicalMemoryElementName] on Subsystem [MemoryElementName]. (DIMM 9)**

  This message is for the use case when an implementation has detected a Memory uncorrectable error recovery.

  May also be shown as 816f010c2009ffff or 0x816f010c2009ffff

  Severity
  Info

  Serviceable
  No

  Automatically notify support
  No

  Alert Category
  Critical - Memory

  SNMP Trap ID
  41

  CIM Information
  Prefix: PLAT **ID:** 0139

  User Response
  No action; information only.

- **816f010c-200affff : Uncorrectable error recovery detected for [PhysicalMemoryElementName] on Subsystem [MemoryElementName]. (DIMM 10)**

  This message is for the use case when an implementation has detected a Memory uncorrectable error recovery.

  May also be shown as 816f010c200affff or 0x816f010c200affff

Severity
Info

Serviceable
No

Automatically notify support
No

Alert Category
Critical - Memory

SNMP Trap ID
41

CIM Information
Prefix: PLAT **ID:** 0139

User Response
No action; information only.

- **816f010c-200bffff : Uncorrectable error recovery detected for [PhysicalMemoryElementName] on Subsystem [MemoryElementName]. (DIMM 11)**

  This message is for the use case when an implementation has detected a Memory uncorrectable error recovery.

  May also be shown as 816f010c200bffff or 0x816f010c200bffff

  Severity
  Info

  Serviceable
  No

  Automatically notify support
  No

  Alert Category
  Critical - Memory

  SNMP Trap ID
  41

  CIM Information
  Prefix: PLAT **ID:** 0139

  User Response
  No action; information only.

- **816f010c-200cffff : Uncorrectable error recovery detected for [PhysicalMemoryElementName] on Subsystem [MemoryElementName]. (DIMM 12)**

  This message is for the use case when an implementation has detected a Memory uncorrectable error recovery.

  May also be shown as 816f010c200cffff or 0x816f010c200cffff

  Severity
  Info

  Serviceable
  No

Automatically notify support
No

Alert Category
Critical - Memory

SNMP Trap ID
41

CIM Information
Prefix: PLAT **ID:** 0139

User Response
No action; information only.

- **816f010c-200dffff : Uncorrectable error recovery detected for [PhysicalMemoryElementName] on Subsystem [MemoryElementName]. (DIMM 13)**

  This message is for the use case when an implementation has detected a Memory uncorrectable error recovery.

  May also be shown as 816f010c200dffff or 0x816f010c200dffff

  Severity
  Info

  Serviceable
  No

  Automatically notify support
  No

  Alert Category
  Critical - Memory

  SNMP Trap ID
  41

  CIM Information
  Prefix: PLAT **ID:** 0139

  User Response
  No action; information only.

- **816f010c-200effff : Uncorrectable error recovery detected for [PhysicalMemoryElementName] on Subsystem [MemoryElementName]. (DIMM 14)**

  This message is for the use case when an implementation has detected a Memory uncorrectable error recovery.

  May also be shown as 816f010c200effff or 0x816f010c200effff

  Severity
  Info

  Serviceable
  No

  Automatically notify support
  No

  Alert Category
  Critical - Memory

SNMP Trap ID
41

CIM Information
Prefix: PLAT **ID:** 0139

User Response
No action; information only.

- **816f010c-200fffff : Uncorrectable error recovery detected for [PhysicalMemoryElementName] on Subsystem [MemoryElementName]. (DIMM 15)**

  This message is for the use case when an implementation has detected a Memory uncorrectable error recovery.

  May also be shown as 816f010c200fffff or 0x816f010c200fffff

  Severity
  Info

  Serviceable
  No

  Automatically notify support
  No

  Alert Category
  Critical - Memory

  SNMP Trap ID
  41

  CIM Information
  Prefix: PLAT **ID:** 0139

  User Response
  No action; information only.

- **816f010c-2010ffff : Uncorrectable error recovery detected for [PhysicalMemoryElementName] on Subsystem [MemoryElementName]. (DIMM 16)**

  This message is for the use case when an implementation has detected a Memory uncorrectable error recovery.

  May also be shown as 816f010c2010ffff or 0x816f010c2010ffff

  Severity
  Info

  Serviceable
  No

  Automatically notify support
  No

  Alert Category
  Critical - Memory

  SNMP Trap ID
  41

  CIM Information
  Prefix: PLAT **ID:** 0139

User Response
No action; information only.

- **816f010c-2011ffff : Uncorrectable error recovery detected for [PhysicalMemoryElementName] on Subsystem [MemoryElementName]. (DIMM 17)**

  This message is for the use case when an implementation has detected a Memory uncorrectable error recovery.

  May also be shown as 816f010c2011ffff or 0x816f010c2011ffff

  Severity
  Info

  Serviceable
  No

  Automatically notify support
  No

  Alert Category
  Critical - Memory

  SNMP Trap ID
  41

  CIM Information
  Prefix: PLAT **ID:** 0139

  User Response
  No action; information only.

- **816f010c-2012ffff : Uncorrectable error recovery detected for [PhysicalMemoryElementName] on Subsystem [MemoryElementName]. (DIMM 18)**

  This message is for the use case when an implementation has detected a Memory uncorrectable error recovery.

  May also be shown as 816f010c2012ffff or 0x816f010c2012ffff

  Severity
  Info

  Serviceable
  No

  Automatically notify support
  No

  Alert Category
  Critical - Memory

  SNMP Trap ID
  41

  CIM Information
  Prefix: PLAT **ID:** 0139

  User Response
  No action; information only.

- **816f010c-2013ffff : Uncorrectable error recovery detected for [PhysicalMemoryElementName] on Subsystem [MemoryElementName]. (DIMM 19)**

This message is for the use case when an implementation has detected a Memory uncorrectable error recovery.

May also be shown as 816f010c2013ffff or 0x816f010c2013ffff

Severity
Info

Serviceable
No

Automatically notify support
No

Alert Category
Critical - Memory

SNMP Trap ID
41

CIM Information
Prefix: PLAT **ID:** 0139

User Response
No action; information only.

- **816f010c-2014ffff : Uncorrectable error recovery detected for [PhysicalMemoryElementName] on Subsystem [MemoryElementName]. (DIMM 20)**

  This message is for the use case when an implementation has detected a Memory uncorrectable error recovery.

  May also be shown as 816f010c2014ffff or 0x816f010c2014ffff

  Severity
  Info

  Serviceable
  No

  Automatically notify support
  No

  Alert Category
  Critical - Memory

  SNMP Trap ID
  41

  CIM Information
  Prefix: PLAT **ID:** 0139

  User Response
  No action; information only.

- **816f010c-2015ffff : Uncorrectable error recovery detected for [PhysicalMemoryElementName] on Subsystem [MemoryElementName]. (DIMM 21)**

  This message is for the use case when an implementation has detected a Memory uncorrectable error recovery.

  May also be shown as 816f010c2015ffff or 0x816f010c2015ffff

Severity
Info

Serviceable
No

Automatically notify support
No

Alert Category
Critical - Memory

SNMP Trap ID
41

CIM Information
Prefix: PLAT **ID:** 0139

User Response
No action; information only.

- **816f010c-2016ffff : Uncorrectable error recovery detected for [PhysicalMemoryElementName] on Subsystem [MemoryElementName]. (DIMM 22)**

  This message is for the use case when an implementation has detected a Memory uncorrectable error recovery.

  May also be shown as 816f010c2016ffff or 0x816f010c2016ffff

  Severity
  Info

  Serviceable
  No

  Automatically notify support
  No

  Alert Category
  Critical - Memory

  SNMP Trap ID
  41

  CIM Information
  Prefix: PLAT **ID:** 0139

  User Response
  No action; information only.

- **816f010c-2017ffff : Uncorrectable error recovery detected for [PhysicalMemoryElementName] on Subsystem [MemoryElementName]. (DIMM 23)**

  This message is for the use case when an implementation has detected a Memory uncorrectable error recovery.

  May also be shown as 816f010c2017ffff or 0x816f010c2017ffff

  Severity
  Info

  Serviceable
  No

Automatically notify support
No

Alert Category
Critical - Memory

SNMP Trap ID
41

CIM Information
Prefix: PLAT **ID:** 0139

User Response
No action; information only.

- **816f010c-2018ffff : Uncorrectable error recovery detected for [PhysicalMemoryElementName] on Subsystem [MemoryElementName]. (DIMM 24)**

  This message is for the use case when an implementation has detected a Memory uncorrectable error recovery.

  May also be shown as 816f010c2018ffff or 0x816f010c2018ffff

  Severity
  Info

  Serviceable
  No

  Automatically notify support
  No

  Alert Category
  Critical - Memory

  SNMP Trap ID
  41

  CIM Information
  Prefix: PLAT **ID:** 0139

  User Response
  No action; information only.

- **816f010c-2581ffff : Uncorrectable error recovery detected for [PhysicalMemoryElementName] on Subsystem [MemoryElementName]. (All DIMMS)**

  This message is for the use case when an implementation has detected a Memory uncorrectable error recovery.

  May also be shown as 816f010c2581ffff or 0x816f010c2581ffff

  Severity
  Info

  Serviceable
  No

  Automatically notify support
  No

  Alert Category
  Critical - Memory

SNMP Trap ID
41

CIM Information
Prefix: PLAT **ID:** 0139

User Response
No action; information only. One of the DIMMs :

- **816f010d-0400ffff : The Drive [StorageVolumeElementName] has been enabled. (Drive 0)**

  This message is for the use case when an implementation has detected a Drive was Enabled.

  May also be shown as 816f010d0400ffff or 0x816f010d0400ffff

  Severity
  Info

  Serviceable
  No

  Automatically notify support
  No

  Alert Category
  Critical - Hard Disk drive

  SNMP Trap ID
  5

  CIM Information
  Prefix: PLAT **ID:** 0167

  User Response
  No action; information only.

- **816f010d-0401ffff : The Drive [StorageVolumeElementName] has been enabled. (Drive 1)**

  This message is for the use case when an implementation has detected a Drive was Enabled.

  May also be shown as 816f010d0401ffff or 0x816f010d0401ffff

  Severity
  Info

  Serviceable
  No

  Automatically notify support
  No

  Alert Category
  Critical - Hard Disk drive

  SNMP Trap ID
  5

  CIM Information
  Prefix: PLAT **ID:** 0167

  User Response
  No action; information only.

- **816f010d-0402ffff : The Drive [StorageVolumeElementName] has been enabled. (Drive 2)**

This message is for the use case when an implementation has detected a Drive was Enabled.

May also be shown as 816f010d0402ffff or 0x816f010d0402ffff

Severity
Info

Serviceable
No

Automatically notify support
No

Alert Category
Critical - Hard Disk drive

SNMP Trap ID
5

CIM Information
Prefix: PLAT **ID:** 0167

User Response
No action; information only.

- **816f010d-0403ffff : The Drive [StorageVolumeElementName] has been enabled. (Drive 3)**

This message is for the use case when an implementation has detected a Drive was Enabled.

May also be shown as 816f010d0403ffff or 0x816f010d0403ffff

Severity
Info

Serviceable
No

Automatically notify support
No

Alert Category
Critical - Hard Disk drive

SNMP Trap ID
5

CIM Information
Prefix: PLAT **ID:** 0167

User Response
No action; information only.

- **816f010d-0404ffff : The Drive [StorageVolumeElementName] has been enabled. (Drive 4)**

This message is for the use case when an implementation has detected a Drive was Enabled.

May also be shown as 816f010d0404ffff or 0x816f010d0404ffff

Severity
Info

Serviceable
No

Automatically notify support
No

Alert Category
Critical - Hard Disk drive

SNMP Trap ID
5

CIM Information
Prefix: PLAT **ID:** 0167

User Response
No action; information only.

- **816f010d-0405ffff : The Drive [StorageVolumeElementName] has been enabled. (Drive 5)**

This message is for the use case when an implementation has detected a Drive was Enabled.

May also be shown as 816f010d0405ffff or 0x816f010d0405ffff

Severity
Info

Serviceable
No

Automatically notify support
No

Alert Category
Critical - Hard Disk drive

SNMP Trap ID
5

CIM Information
Prefix: PLAT **ID:** 0167

User Response
No action; information only.

- **816f010d-0406ffff : The Drive [StorageVolumeElementName] has been enabled. (Drive 6)**

This message is for the use case when an implementation has detected a Drive was Enabled.

May also be shown as 816f010d0406ffff or 0x816f010d0406ffff

Severity
Info

Serviceable
No

Automatically notify support
No

Alert Category
Critical - Hard Disk drive

SNMP Trap ID
5

CIM Information
Prefix: PLAT **ID:** 0167

User Response
No action; information only.

- **816f010d-0407ffff : The Drive [StorageVolumeElementName] has been enabled. (Drive 7)**

This message is for the use case when an implementation has detected a Drive was Enabled.

May also be shown as 816f010d0407ffff or 0x816f010d0407ffff

Severity
Info

Serviceable
No

Automatically notify support
No

Alert Category
Critical - Hard Disk drive

SNMP Trap ID
5

CIM Information
Prefix: PLAT **ID:** 0167

User Response
No action; information only.

- **816f010d-0408ffff : The Drive [StorageVolumeElementName] has been enabled. (Drive 8)**

This message is for the use case when an implementation has detected a Drive was Enabled.

May also be shown as 816f010d0408ffff or 0x816f010d0408ffff

Severity
Info

Serviceable
No

Automatically notify support
No

Alert Category
Critical - Hard Disk drive

SNMP Trap ID
5

CIM Information
Prefix: PLAT **ID:** 0167

User Response
No action; information only.

- **816f010d-0409ffff : The Drive [StorageVolumeElementName] has been enabled. (Drive 9)**

This message is for the use case when an implementation has detected a Drive was Enabled.

May also be shown as 816f010d0409ffff or 0x816f010d0409ffff

Severity

Info

Serviceable
No

Automatically notify support
No

Alert Category
Critical - Hard Disk drive

SNMP Trap ID
5

CIM Information
Prefix: PLAT **ID:** 0167

User Response
No action; information only.

- **816f010d-040affff : The Drive [StorageVolumeElementName] has been enabled. (Drive 10)**

  This message is for the use case when an implementation has detected a Drive was Enabled.

  May also be shown as 816f010d040affff or 0x816f010d040affff

  Severity
  Info

  Serviceable
  No

  Automatically notify support
  No

  Alert Category
  Critical - Hard Disk drive

  SNMP Trap ID
  5

  CIM Information
  Prefix: PLAT **ID:** 0167

  User Response
  No action; information only.

- **816f010d-040bffff : The Drive [StorageVolumeElementName] has been enabled. (Drive 11)**

  This message is for the use case when an implementation has detected a Drive was Enabled.

  May also be shown as 816f010d040bffff or 0x816f010d040bffff

  Severity
  Info

  Serviceable
  No

  Automatically notify support
  No

  Alert Category
  Critical - Hard Disk drive

SNMP Trap ID
5

CIM Information
Prefix: PLAT **ID:** 0167

User Response
No action; information only.

- **816f010d-040cffff : The Drive [StorageVolumeElementName] has been enabled. (Drive 12)**

This message is for the use case when an implementation has detected a Drive was Enabled.

May also be shown as 816f010d040cffff or 0x816f010d040cffff

Severity
Info

Serviceable
No

Automatically notify support
No

Alert Category
Critical - Hard Disk drive

SNMP Trap ID
5

CIM Information
Prefix: PLAT **ID:** 0167

User Response
No action; information only.

- **816f010d-040dffff : The Drive [StorageVolumeElementName] has been enabled. (Drive 13)**

This message is for the use case when an implementation has detected a Drive was Enabled.

May also be shown as 816f010d040dffff or 0x816f010d040dffff

Severity
Info

Serviceable
No

Automatically notify support
No

Alert Category
Critical - Hard Disk drive

SNMP Trap ID
5

CIM Information
Prefix: PLAT **ID:** 0167

User Response
No action; information only.

- **816f010d-0410ffff : The Drive [StorageVolumeElementName] has been enabled. (Ext Drive)**

This message is for the use case when an implementation has detected a Drive was Enabled.

May also be shown as 816f010d0410ffff or 0x816f010d0410ffff

Severity
Info

Serviceable
No

Automatically notify support
No

Alert Category
Critical - Hard Disk drive

SNMP Trap ID
5

CIM Information
Prefix: PLAT **ID:** 0167

User Response
No action; information only.

- **816f010f-2201ffff : The System [ComputerSystemElementName] has recovered from a firmware hang. (Firmware Error)**

This message is for the use case when an implementation has recovered from a System Firmware Hang.

May also be shown as 816f010f2201ffff or 0x816f010f2201ffff

Severity
Info

Serviceable
No

Automatically notify support
No

Alert Category
Critical - Other

SNMP Trap ID
50

CIM Information
Prefix: PLAT **ID:** 0187

User Response
No action; information only.

- **816f0113-0301ffff : System [ComputerSystemElementName] has recovered from a bus timeout. (CPU 1 PECI)**

This message is for the use case when an implementation has detected that a system has recovered from a Bus Timeout.

May also be shown as 816f01130301ffff or 0x816f01130301ffff

Severity
Info

Serviceable
No

Automatically notify support
No

Alert Category
Critical - Other

SNMP Trap ID
50

CIM Information
Prefix: PLAT **ID:** 0225

User Response

1. (Trained technician only) Replace microprocessor n (see Removing a microprocessor and heat sink and Replacing a microprocessor and heat sink).
2. If the problem persists and there is no other CPU with the same error indication, replace the system board.
3. (Trained technician only) Replace the system board (see Removing the system board and Replacing the system board). (n = microprocessor number)

- **816f0113-0302ffff : System [ComputerSystemElementName] has recovered from a bus timeout. (CPU 2 PECI)**

This message is for the use case when an implementation has detected that a system has recovered from a Bus Timeout.

May also be shown as 816f01130302ffff or 0x816f01130302ffff

Severity
Info

Serviceable
No

Automatically notify support
No

Alert Category
Critical - Other

SNMP Trap ID
50

CIM Information
Prefix: PLAT **ID:** 0225

User Response

1. (Trained technician only) Replace microprocessor n (see Removing a microprocessor and heat sink and Replacing a microprocessor and heat sink).
2. If the problem persists and there is no other CPU with the same error indication, replace the system board.
3. (Trained technician only) Replace the system board (see Removing the system board and Replacing the system board). (n = microprocessor number)

- **816f011b-0701ffff : The connector [PhysicalConnectorElementName] configuration error has been repaired. (Front USB)**

This message is for the use case when an implementation has detected an Interconnect Configuration was Repaired.

May also be shown as 816f011b0701ffff or 0x816f011b0701ffff

Severity
Info

Serviceable
No

Automatically notify support
No

Alert Category
Critical - Other

SNMP Trap ID
50

CIM Information
Prefix: PLAT **ID:** 0267

User Response
No action; information only. Front Video :

- **816f011b-0c01ffff : The connector [PhysicalConnectorElementName] configuration error has been repaired. (FP LCD Cable)**

This message is for the use case when an implementation has detected an Interconnect Configuration was Repaired.

May also be shown as 816f011b0c01ffff or 0x816f011b0c01ffff

Severity
Info

Serviceable
No

Automatically notify support
No

Alert Category
Critical - Other

SNMP Trap ID
50

CIM Information
Prefix: PLAT **ID:** 0267

User Response
No action; information only.

- **816f0125-0c01ffff : [ManagedElementName] detected as present. (Front Panel)**

This message is for the use case when an implementation has detected a Managed Element is now Present.

May also be shown as 816f01250c01ffff or 0x816f01250c01ffff

Severity
Info

Serviceable
No

Automatically notify support
No

Alert Category
System - Other

SNMP Trap ID

CIM Information
Prefix: PLAT **ID:** 0390

User Response
No action; information only.

- **816f0125-1001ffff : [ManagedElementName] detected as present. (PCI Riser 1)**

This message is for the use case when an implementation has detected a Managed Element is now Present.

May also be shown as 816f01251001ffff or 0x816f01251001ffff

Severity
Info

Serviceable
No

Automatically notify support
No

Alert Category
System - Other

SNMP Trap ID

CIM Information
Prefix: PLAT **ID:** 0390

User Response
No action; information only.

- **816f0125-1002ffff : [ManagedElementName] detected as present. (PCI Riser 2)**

This message is for the use case when an implementation has detected a Managed Element is now Present.

May also be shown as 816f01251002ffff or 0x816f01251002ffff

Severity
Info

Serviceable
No

Automatically notify support
No

Alert Category
System - Other

SNMP Trap ID

CIM Information
Prefix: PLAT **ID:** 0390

User Response
No action; information only.

- **816f0125-2c01ffff : [ManagedElementName] detected as present. (ML2 Card)**

This message is for the use case when an implementation has detected a Managed Element is now Present.

May also be shown as 816f01252c01ffff or 0x816f01252c01ffff

Severity
Info

Serviceable
No

Automatically notify support
No

Alert Category
System - Other

SNMP Trap ID

CIM Information
Prefix: PLAT **ID:** 0390

User Response
No action; information only.

- **816f0207-0301ffff : [ProcessorElementName] has Recovered from FRB1/BIST condition. (CPU 1)**

This message is for the use case when an implementation has detected a Processor Recovered - FRB1/BIST condition.

May also be shown as 816f02070301ffff or 0x816f02070301ffff

Severity
Info

Serviceable
No

Automatically notify support
No

Alert Category
Critical - CPU

SNMP Trap ID
40

CIM Information
Prefix: PLAT **ID:** 0045

User Response
No action; information only.

- **816f0207-0302ffff : [ProcessorElementName] has Recovered from FRB1/BIST condition. (CPU 2)**

  This message is for the use case when an implementation has detected a Processor Recovered - FRB1/BIST condition.

  May also be shown as 816f02070302ffff or 0x816f02070302ffff

  Severity
  Info

  Serviceable
  No

  Automatically notify support
  No

  Alert Category
  Critical - CPU

  SNMP Trap ID
  40

  CIM Information
  Prefix: PLAT **ID:** 0045

  User Response
  No action; information only.

- **816f0207-2584ffff : [ProcessorElementName] has Recovered from FRB1/BIST condition. (All CPUs)**

  This message is for the use case when an implementation has detected a Processor Recovered - FRB1/BIST condition.

  May also be shown as 816f02072584ffff or 0x816f02072584ffff

  Severity
  Info

  Serviceable
  No

  Automatically notify support
  No

  Alert Category
  Critical - CPU

  SNMP Trap ID
  40

  CIM Information
  Prefix: PLAT **ID:** 0045

  User Response
  No action; information only. One of the CPUs :

- **816f020d-0400ffff : Failure no longer Predicted on drive [StorageVolumeElementName] for array [ComputerSystemElementName]. (Drive 0)**

  This message is for the use case when an implementation has detected an Array Failure is no longer Predicted.

  May also be shown as 816f020d0400ffff or 0x816f020d0400ffff

Severity
Info

Serviceable
No

Automatically notify support
No

Alert Category
System - Predicted Failure

SNMP Trap ID
27

CIM Information
Prefix: PLAT **ID:** 0169

User Response
No action; information only.

- **816f020d-0401ffff : Failure no longer Predicted on drive [StorageVolumeElementName] for array [ComputerSystemElementName]. (Drive 1)**

  This message is for the use case when an implementation has detected an Array Failure is no longer Predicted.

  May also be shown as 816f020d0401ffff or 0x816f020d0401ffff

  Severity
  Info

  Serviceable
  No

  Automatically notify support
  No

  Alert Category
  System - Predicted Failure

  SNMP Trap ID
  27

  CIM Information
  Prefix: PLAT **ID:** 0169

  User Response
  No action; information only.

- **816f020d-0402ffff : Failure no longer Predicted on drive [StorageVolumeElementName] for array [ComputerSystemElementName]. (Drive 2)**

  This message is for the use case when an implementation has detected an Array Failure is no longer Predicted.

  May also be shown as 816f020d0402ffff or 0x816f020d0402ffff

  Severity
  Info

  Serviceable
  No

Automatically notify support
No

Alert Category
System - Predicted Failure

SNMP Trap ID
27

CIM Information
Prefix: PLAT **ID:** 0169

User Response
No action; information only.

- **816f020d-0403ffff : Failure no longer Predicted on drive [StorageVolumeElementName] for array [ComputerSystemElementName]. (Drive 3)**

  This message is for the use case when an implementation has detected an Array Failure is no longer Predicted.

  May also be shown as 816f020d0403ffff or 0x816f020d0403ffff

  Severity
  Info

  Serviceable
  No

  Automatically notify support
  No

  Alert Category
  System - Predicted Failure

  SNMP Trap ID
  27

  CIM Information
  Prefix: PLAT **ID:** 0169

  User Response
  No action; information only.

- **816f020d-0404ffff : Failure no longer Predicted on drive [StorageVolumeElementName] for array [ComputerSystemElementName]. (Drive 4)**

  This message is for the use case when an implementation has detected an Array Failure is no longer Predicted.

  May also be shown as 816f020d0404ffff or 0x816f020d0404ffff

  Severity
  Info

  Serviceable
  No

  Automatically notify support
  No

  Alert Category
  System - Predicted Failure

SNMP Trap ID
27

CIM Information
Prefix: PLAT **ID:** 0169

User Response
No action; information only.

- **816f020d-0405ffff : Failure no longer Predicted on drive [StorageVolumeElementName] for array [ComputerSystemElementName]. (Drive 5)**

  This message is for the use case when an implementation has detected an Array Failure is no longer Predicted.

  May also be shown as 816f020d0405ffff or 0x816f020d0405ffff

  Severity
  Info

  Serviceable
  No

  Automatically notify support
  No

  Alert Category
  System - Predicted Failure

  SNMP Trap ID
  27

  CIM Information
  Prefix: PLAT **ID:** 0169

  User Response
  No action; information only.

- **816f020d-0406ffff : Failure no longer Predicted on drive [StorageVolumeElementName] for array [ComputerSystemElementName]. (Drive 6)**

  This message is for the use case when an implementation has detected an Array Failure is no longer Predicted.

  May also be shown as 816f020d0406ffff or 0x816f020d0406ffff

  Severity
  Info

  Serviceable
  No

  Automatically notify support
  No

  Alert Category
  System - Predicted Failure

  SNMP Trap ID
  27

  CIM Information
  Prefix: PLAT **ID:** 0169

User Response
No action; information only.

- **816f020d-0407ffff : Failure no longer Predicted on drive [StorageVolumeElementName] for array [ComputerSystemElementName]. (Drive 7)**

  This message is for the use case when an implementation has detected an Array Failure is no longer Predicted.

  May also be shown as 816f020d0407ffff or 0x816f020d0407ffff

  Severity
  Info

  Serviceable
  No

  Automatically notify support
  No

  Alert Category
  System - Predicted Failure

  SNMP Trap ID
  27

  CIM Information
  Prefix: PLAT **ID:** 0169

  User Response
  No action; information only.

- **816f020d-0408ffff : Failure no longer Predicted on drive [StorageVolumeElementName] for array [ComputerSystemElementName]. (Drive 8)**

  This message is for the use case when an implementation has detected an Array Failure is no longer Predicted.

  May also be shown as 816f020d0408ffff or 0x816f020d0408ffff

  Severity
  Info

  Serviceable
  No

  Automatically notify support
  No

  Alert Category
  System - Predicted Failure

  SNMP Trap ID
  27

  CIM Information
  Prefix: PLAT **ID:** 0169

  User Response
  No action; information only.

- **816f020d-0409ffff : Failure no longer Predicted on drive [StorageVolumeElementName] for array [ComputerSystemElementName]. (Drive 9)**

This message is for the use case when an implementation has detected an Array Failure is no longer Predicted.

May also be shown as 816f020d0409ffff or 0x816f020d0409ffff

Severity
Info

Serviceable
No

Automatically notify support
No

Alert Category
System - Predicted Failure

SNMP Trap ID
27

CIM Information
Prefix: PLAT **ID:** 0169

User Response
No action; information only.

- **816f020d-040affff : Failure no longer Predicted on drive [StorageVolumeElementName] for array [ComputerSystemElementName]. (Drive 10)**

  This message is for the use case when an implementation has detected an Array Failure is no longer Predicted.

  May also be shown as 816f020d040affff or 0x816f020d040affff

  Severity
  Info

  Serviceable
  No

  Automatically notify support
  No

  Alert Category
  System - Predicted Failure

  SNMP Trap ID
  27

  CIM Information
  Prefix: PLAT **ID:** 0169

  User Response
  No action; information only.

- **816f020d-040bffff : Failure no longer Predicted on drive [StorageVolumeElementName] for array [ComputerSystemElementName]. (Drive 11)**

  This message is for the use case when an implementation has detected an Array Failure is no longer Predicted.

  May also be shown as 816f020d040bffff or 0x816f020d040bffff

Severity
Info

Serviceable
No

Automatically notify support
No

Alert Category
System - Predicted Failure

SNMP Trap ID
27

CIM Information
Prefix: PLAT **ID:** 0169

User Response
No action; information only.

- **816f020d-040cffff : Failure no longer Predicted on drive [StorageVolumeElementName] for array [ComputerSystemElementName]. (Drive 12)**

  This message is for the use case when an implementation has detected an Array Failure is no longer Predicted.

  May also be shown as 816f020d040cffff or 0x816f020d040cffff

  Severity
  Info

  Serviceable
  No

  Automatically notify support
  No

  Alert Category
  System - Predicted Failure

  SNMP Trap ID
  27

  CIM Information
  Prefix: PLAT **ID:** 0169

  User Response
  No action; information only.

- **816f020d-040dffff : Failure no longer Predicted on drive [StorageVolumeElementName] for array [ComputerSystemElementName]. (Drive 13)**

  This message is for the use case when an implementation has detected an Array Failure is no longer Predicted.

  May also be shown as 816f020d040dffff or 0x816f020d040dffff

  Severity
  Info

  Serviceable
  No

Automatically notify support
No

Alert Category
System - Predicted Failure

SNMP Trap ID
27

CIM Information
Prefix: PLAT **ID:** 0169

User Response
No action; information only.

- **816f020d-0410ffff : Failure no longer Predicted on drive [StorageVolumeElementName] for array [ComputerSystemElementName]. (Ext Drive)**

  This message is for the use case when an implementation has detected an Array Failure is no longer Predicted.

  May also be shown as 816f020d0410ffff or 0x816f020d0410ffff

  Severity
  Info

  Serviceable
  No

  Automatically notify support
  No

  Alert Category
  System - Predicted Failure

  SNMP Trap ID
  27

  CIM Information
  Prefix: PLAT **ID:** 0169

  User Response
  No action; information only.

- **816f0308-0a01ffff : [PowerSupplyElementName] has returned to a Normal Input State. (Power Supply 1)**

  This message is for the use case when an implementation has detected a Power Supply that has input that has returned to normal.

  May also be shown as 816f03080a01ffff or 0x816f03080a01ffff

  Severity
  Info

  Serviceable
  No

  Automatically notify support
  No

  Alert Category
  System - Other

SNMP Trap ID

CIM Information
Prefix: PLAT **ID:** 0099

User Response
No action; information only.

- **816f0308-0a02ffff : [PowerSupplyElementName] has returned to a Normal Input State. (Power Supply 2)**

This message is for the use case when an implementation has detected a Power Supply that has input that has returned to normal.

May also be shown as 816f03080a02ffff or 0x816f03080a02ffff

Severity
Info

Serviceable
No

Automatically notify support
No

Alert Category
System - Other

SNMP Trap ID

CIM Information
Prefix: PLAT **ID:** 0099

User Response
No action; information only.

- **816f030c-2001ffff : Scrub Failure for [PhysicalMemoryElementName] on Subsystem [MemoryElementName] has recovered. (DIMM 1)**

This message is for the use case when an implementation has detected a Memory Scrub failure recovery.

May also be shown as 816f030c2001ffff or 0x816f030c2001ffff

Severity
Info

Serviceable
No

Automatically notify support
No

Alert Category
Critical - Memory

SNMP Trap ID
41

CIM Information
Prefix: PLAT **ID:** 0137

User Response

No action; information only.

- **816f030c-2002ffff : Scrub Failure for [PhysicalMemoryElementName] on Subsystem [MemoryElementName] has recovered. (DIMM 2)**

  This message is for the use case when an implementation has detected a Memory Scrub failure recovery.

  May also be shown as 816f030c2002ffff or 0x816f030c2002ffff

  Severity
  Info

  Serviceable
  No

  Automatically notify support
  No

  Alert Category
  Critical - Memory

  SNMP Trap ID
  41

  CIM Information
  Prefix: PLAT **ID:** 0137

  User Response
  No action; information only.

- **816f030c-2003ffff : Scrub Failure for [PhysicalMemoryElementName] on Subsystem [MemoryElementName] has recovered. (DIMM 3)**

  This message is for the use case when an implementation has detected a Memory Scrub failure recovery.

  May also be shown as 816f030c2003ffff or 0x816f030c2003ffff

  Severity
  Info

  Serviceable
  No

  Automatically notify support
  No

  Alert Category
  Critical - Memory

  SNMP Trap ID
  41

  CIM Information
  Prefix: PLAT **ID:** 0137

  User Response
  No action; information only.

- **816f030c-2004ffff : Scrub Failure for [PhysicalMemoryElementName] on Subsystem [MemoryElementName] has recovered. (DIMM 4)**

  This message is for the use case when an implementation has detected a Memory Scrub failure recovery.

  May also be shown as 816f030c2004ffff or 0x816f030c2004ffff

Severity
Info

Serviceable
No

Automatically notify support
No

Alert Category
Critical - Memory

SNMP Trap ID
41

CIM Information
Prefix: PLAT **ID:** 0137

User Response
No action; information only.

- **816f030c-2005ffff : Scrub Failure for [PhysicalMemoryElementName] on Subsystem [MemoryElementName] has recovered. (DIMM 5)**

  This message is for the use case when an implementation has detected a Memory Scrub failure recovery.

  May also be shown as 816f030c2005ffff or 0x816f030c2005ffff

  Severity
  Info

  Serviceable
  No

  Automatically notify support
  No

  Alert Category
  Critical - Memory

  SNMP Trap ID
  41

  CIM Information
  Prefix: PLAT **ID:** 0137

  User Response
  No action; information only.

- **816f030c-2006ffff : Scrub Failure for [PhysicalMemoryElementName] on Subsystem [MemoryElementName] has recovered. (DIMM 6)**

  This message is for the use case when an implementation has detected a Memory Scrub failure recovery.

  May also be shown as 816f030c2006ffff or 0x816f030c2006ffff

  Severity
  Info

  Serviceable
  No

  Automatically notify support
  No

Alert Category
Critical - Memory

SNMP Trap ID
41

CIM Information
Prefix: PLAT **ID:** 0137

User Response
No action; information only.

- **816f030c-2007ffff : Scrub Failure for [PhysicalMemoryElementName] on Subsystem [MemoryElementName] has recovered. (DIMM 7)**

  This message is for the use case when an implementation has detected a Memory Scrub failure recovery.

  May also be shown as 816f030c2007ffff or 0x816f030c2007ffff

  Severity
  Info

  Serviceable
  No

  Automatically notify support
  No

  Alert Category
  Critical - Memory

  SNMP Trap ID
  41

  CIM Information
  Prefix: PLAT **ID:** 0137

  User Response
  No action; information only.

- **816f030c-2008ffff : Scrub Failure for [PhysicalMemoryElementName] on Subsystem [MemoryElementName] has recovered. (DIMM 8)**

  This message is for the use case when an implementation has detected a Memory Scrub failure recovery.

  May also be shown as 816f030c2008ffff or 0x816f030c2008ffff

  Severity
  Info

  Serviceable
  No

  Automatically notify support
  No

  Alert Category
  Critical - Memory

  SNMP Trap ID
  41

  CIM Information
  Prefix: PLAT **ID:** 0137

User Response
No action; information only.

- **816f030c-2009ffff : Scrub Failure for [PhysicalMemoryElementName] on Subsystem [MemoryElementName] has recovered. (DIMM 9)**

  This message is for the use case when an implementation has detected a Memory Scrub failure recovery.

  May also be shown as 816f030c2009ffff or 0x816f030c2009ffff

  Severity
  Info

  Serviceable
  No

  Automatically notify support
  No

  Alert Category
  Critical - Memory

  SNMP Trap ID
  41

  CIM Information
  Prefix: PLAT **ID:** 0137

  User Response
  No action; information only.

- **816f030c-200affff : Scrub Failure for [PhysicalMemoryElementName] on Subsystem [MemoryElementName] has recovered. (DIMM 10)**

  This message is for the use case when an implementation has detected a Memory Scrub failure recovery.

  May also be shown as 816f030c200affff or 0x816f030c200affff

  Severity
  Info

  Serviceable
  No

  Automatically notify support
  No

  Alert Category
  Critical - Memory

  SNMP Trap ID
  41

  CIM Information
  Prefix: PLAT **ID:** 0137

  User Response
  No action; information only.

- **816f030c-200bffff : Scrub Failure for [PhysicalMemoryElementName] on Subsystem [MemoryElementName] has recovered. (DIMM 11)**

  This message is for the use case when an implementation has detected a Memory Scrub failure recovery.

May also be shown as 816f030c200bffff or 0x816f030c200bffff

Severity
Info

Serviceable
No

Automatically notify support
No

Alert Category
Critical - Memory

SNMP Trap ID
41

CIM Information
Prefix: PLAT **ID:** 0137

User Response
No action; information only.

- **816f030c-200cffff : Scrub Failure for [PhysicalMemoryElementName] on Subsystem [MemoryElementName] has recovered. (DIMM 12)**

  This message is for the use case when an implementation has detected a Memory Scrub failure recovery.

  May also be shown as 816f030c200cffff or 0x816f030c200cffff

  Severity
  Info

  Serviceable
  No

  Automatically notify support
  No

  Alert Category
  Critical - Memory

  SNMP Trap ID
  41

  CIM Information
  Prefix: PLAT **ID:** 0137

  User Response
  No action; information only.

- **816f030c-200dffff : Scrub Failure for [PhysicalMemoryElementName] on Subsystem [MemoryElementName] has recovered. (DIMM 13)**

  This message is for the use case when an implementation has detected a Memory Scrub failure recovery.

  May also be shown as 816f030c200dffff or 0x816f030c200dffff

  Severity
  Info

  Serviceable
  No

Automatically notify support
No

Alert Category
Critical - Memory

SNMP Trap ID
41

CIM Information
Prefix: PLAT **ID:** 0137

User Response
No action; information only.

- **816f030c-200effff : Scrub Failure for [PhysicalMemoryElementName] on Subsystem [MemoryElementName] has recovered. (DIMM 14)**

  This message is for the use case when an implementation has detected a Memory Scrub failure recovery.

  May also be shown as 816f030c200effff or 0x816f030c200effff

  Severity
  Info

  Serviceable
  No

  Automatically notify support
  No

  Alert Category
  Critical - Memory

  SNMP Trap ID
  41

  CIM Information
  Prefix: PLAT **ID:** 0137

  User Response
  No action; information only.

- **816f030c-200fffff : Scrub Failure for [PhysicalMemoryElementName] on Subsystem [MemoryElementName] has recovered. (DIMM 15)**

  This message is for the use case when an implementation has detected a Memory Scrub failure recovery.

  May also be shown as 816f030c200fffff or 0x816f030c200fffff

  Severity
  Info

  Serviceable
  No

  Automatically notify support
  No

  Alert Category
  Critical - Memory

  SNMP Trap ID
  41

CIM Information
Prefix: PLAT **ID:** 0137

User Response
No action; information only.

- **816f030c-2010ffff : Scrub Failure for [PhysicalMemoryElementName] on Subsystem [MemoryElementName] has recovered. (DIMM 16)**

  This message is for the use case when an implementation has detected a Memory Scrub failure recovery.

  May also be shown as 816f030c2010ffff or 0x816f030c2010ffff

  Severity
  Info

  Serviceable
  No

  Automatically notify support
  No

  Alert Category
  Critical - Memory

  SNMP Trap ID
  41

  CIM Information
  Prefix: PLAT **ID:** 0137

  User Response
  No action; information only.

- **816f030c-2011ffff : Scrub Failure for [PhysicalMemoryElementName] on Subsystem [MemoryElementName] has recovered. (DIMM 17)**

  This message is for the use case when an implementation has detected a Memory Scrub failure recovery.

  May also be shown as 816f030c2011ffff or 0x816f030c2011ffff

  Severity
  Info

  Serviceable
  No

  Automatically notify support
  No

  Alert Category
  Critical - Memory

  SNMP Trap ID
  41

  CIM Information
  Prefix: PLAT **ID:** 0137

  User Response
  No action; information only.

- **816f030c-2012ffff : Scrub Failure for [PhysicalMemoryElementName] on Subsystem [MemoryElementName] has recovered. (DIMM 18)**

This message is for the use case when an implementation has detected a Memory Scrub failure recovery.

May also be shown as 816f030c2012ffff or 0x816f030c2012ffff

Severity
Info

Serviceable
No

Automatically notify support
No

Alert Category
Critical - Memory

SNMP Trap ID
41

CIM Information
Prefix: PLAT **ID:** 0137

User Response
No action; information only.

- **816f030c-2013ffff : Scrub Failure for [PhysicalMemoryElementName] on Subsystem [MemoryElementName] has recovered. (DIMM 19)**

  This message is for the use case when an implementation has detected a Memory Scrub failure recovery.

  May also be shown as 816f030c2013ffff or 0x816f030c2013ffff

  Severity
  Info

  Serviceable
  No

  Automatically notify support
  No

  Alert Category
  Critical - Memory

  SNMP Trap ID
  41

  CIM Information
  Prefix: PLAT **ID:** 0137

  User Response
  No action; information only.

- **816f030c-2014ffff : Scrub Failure for [PhysicalMemoryElementName] on Subsystem [MemoryElementName] has recovered. (DIMM 20)**

  This message is for the use case when an implementation has detected a Memory Scrub failure recovery.

  May also be shown as 816f030c2014ffff or 0x816f030c2014ffff

  Severity
  Info

  Serviceable

No

Automatically notify support
No

Alert Category
Critical - Memory

SNMP Trap ID
41

CIM Information
Prefix: PLAT **ID:** 0137

User Response
No action; information only.

- **816f030c-2015ffff : Scrub Failure for [PhysicalMemoryElementName] on Subsystem [MemoryElementName] has recovered. (DIMM 21)**

  This message is for the use case when an implementation has detected a Memory Scrub failure recovery.

  May also be shown as 816f030c2015ffff or 0x816f030c2015ffff

  Severity
  Info

  Serviceable
  No

  Automatically notify support
  No

  Alert Category
  Critical - Memory

  SNMP Trap ID
  41

  CIM Information
  Prefix: PLAT **ID:** 0137

  User Response
  No action; information only.

- **816f030c-2016ffff : Scrub Failure for [PhysicalMemoryElementName] on Subsystem [MemoryElementName] has recovered. (DIMM 22)**

  This message is for the use case when an implementation has detected a Memory Scrub failure recovery.

  May also be shown as 816f030c2016ffff or 0x816f030c2016ffff

  Severity
  Info

  Serviceable
  No

  Automatically notify support
  No

  Alert Category
  Critical - Memory

  SNMP Trap ID

41

CIM Information
Prefix: PLAT **ID:** 0137

User Response
No action; information only.

- **816f030c-2017ffff : Scrub Failure for [PhysicalMemoryElementName] on Subsystem [MemoryElementName] has recovered. (DIMM 23)**

  This message is for the use case when an implementation has detected a Memory Scrub failure recovery.

  May also be shown as 816f030c2017ffff or 0x816f030c2017ffff

  Severity
  Info

  Serviceable
  No

  Automatically notify support
  No

  Alert Category
  Critical - Memory

  SNMP Trap ID
  41

  CIM Information
  Prefix: PLAT **ID:** 0137

  User Response
  No action; information only.

- **816f030c-2018ffff : Scrub Failure for [PhysicalMemoryElementName] on Subsystem [MemoryElementName] has recovered. (DIMM 24)**

  This message is for the use case when an implementation has detected a Memory Scrub failure recovery.

  May also be shown as 816f030c2018ffff or 0x816f030c2018ffff

  Severity
  Info

  Serviceable
  No

  Automatically notify support
  No

  Alert Category
  Critical - Memory

  SNMP Trap ID
  41

  CIM Information
  Prefix: PLAT **ID:** 0137

  User Response
  No action; information only.

- **816f030c-2581ffff : Scrub Failure for [PhysicalMemoryElementName] on Subsystem [MemoryElementName] has recovered. (All DIMMS)**

  This message is for the use case when an implementation has detected a Memory Scrub failure recovery.

  May also be shown as 816f030c2581ffff or 0x816f030c2581ffff

  Severity
  Info

  Serviceable
  No

  Automatically notify support
  No

  Alert Category
  Critical - Memory

  SNMP Trap ID
  41

  CIM Information
  Prefix: PLAT **ID:** 0137

  User Response
  No action; information only. One of the DIMMs :

- **816f030d-0400ffff : Hot spare disabled for [ComputerSystemElementName]. (Drive 0)**

  This message is for the use case when an implementation has detected a Hot Spare has been Disabled.

  May also be shown as 816f030d0400ffff or 0x816f030d0400ffff

  Severity
  Info

  Serviceable
  No

  Automatically notify support
  No

  Alert Category
  System - Other

  SNMP Trap ID

  CIM Information
  Prefix: PLAT **ID:** 0171

  User Response
  No action; information only.

- **816f030d-0401ffff : Hot spare disabled for [ComputerSystemElementName]. (Drive 1)**

  This message is for the use case when an implementation has detected a Hot Spare has been Disabled.

  May also be shown as 816f030d0401ffff or 0x816f030d0401ffff

  Severity
  Info

  Serviceable

No

Automatically notify support
No

Alert Category
System - Other

SNMP Trap ID

CIM Information
Prefix: PLAT **ID:** 0171

User Response
No action; information only.

- **816f030d-0402ffff : Hot spare disabled for [ComputerSystemElementName]. (Drive 2)**

  This message is for the use case when an implementation has detected a Hot Spare has been Disabled.

  May also be shown as 816f030d0402ffff or 0x816f030d0402ffff

  Severity
  Info

  Serviceable
  No

  Automatically notify support
  No

  Alert Category
  System - Other

  SNMP Trap ID

  CIM Information
  Prefix: PLAT **ID:** 0171

  User Response
  No action; information only.

- **816f030d-0403ffff : Hot spare disabled for [ComputerSystemElementName]. (Drive 3)**

  This message is for the use case when an implementation has detected a Hot Spare has been Disabled.

  May also be shown as 816f030d0403ffff or 0x816f030d0403ffff

  Severity
  Info

  Serviceable
  No

  Automatically notify support
  No

  Alert Category
  System - Other

  SNMP Trap ID

CIM Information
Prefix: PLAT **ID:** 0171

User Response
No action; information only.

- **816f030d-0404ffff : Hot spare disabled for [ComputerSystemElementName]. (Drive 4)**

This message is for the use case when an implementation has detected a Hot Spare has been Disabled.

May also be shown as 816f030d0404ffff or 0x816f030d0404ffff

Severity
Info

Serviceable
No

Automatically notify support
No

Alert Category
System - Other

SNMP Trap ID

CIM Information
Prefix: PLAT **ID:** 0171

User Response
No action; information only.

- **816f030d-0405ffff : Hot spare disabled for [ComputerSystemElementName]. (Drive 5)**

This message is for the use case when an implementation has detected a Hot Spare has been Disabled.

May also be shown as 816f030d0405ffff or 0x816f030d0405ffff

Severity
Info

Serviceable
No

Automatically notify support
No

Alert Category
System - Other

SNMP Trap ID

CIM Information
Prefix: PLAT **ID:** 0171

User Response
No action; information only.

- **816f030d-0406ffff : Hot spare disabled for [ComputerSystemElementName]. (Drive 6)**

This message is for the use case when an implementation has detected a Hot Spare has been Disabled.

May also be shown as 816f030d0406ffff or 0x816f030d0406ffff

Severity
Info

Serviceable
No

Automatically notify support
No

Alert Category
System - Other

SNMP Trap ID

CIM Information
Prefix: PLAT **ID:** 0171

User Response
No action; information only.

- **816f030d-0407ffff : Hot spare disabled for [ComputerSystemElementName]. (Drive 7)**

  This message is for the use case when an implementation has detected a Hot Spare has been Disabled.

  May also be shown as 816f030d0407ffff or 0x816f030d0407ffff

  Severity
  Info

  Serviceable
  No

  Automatically notify support
  No

  Alert Category
  System - Other

  SNMP Trap ID

  CIM Information
  Prefix: PLAT **ID:** 0171

  User Response
  No action; information only.

- **816f030d-0408ffff : Hot spare disabled for [ComputerSystemElementName]. (Drive 8)**

  This message is for the use case when an implementation has detected a Hot Spare has been Disabled.

  May also be shown as 816f030d0408ffff or 0x816f030d0408ffff

  Severity
  Info

  Serviceable
  No

  Automatically notify support
  No

  Alert Category
  System - Other

SNMP Trap ID

CIM Information
Prefix: PLAT **ID:** 0171

User Response
No action; information only.

- **816f030d-0409ffff : Hot spare disabled for [ComputerSystemElementName]. (Drive 9)**

This message is for the use case when an implementation has detected a Hot Spare has been Disabled.

May also be shown as 816f030d0409ffff or 0x816f030d0409ffff

Severity
Info

Serviceable
No

Automatically notify support
No

Alert Category
System - Other

SNMP Trap ID

CIM Information
Prefix: PLAT **ID:** 0171

User Response
No action; information only.

- **816f030d-040affff : Hot spare disabled for [ComputerSystemElementName]. (Drive 10)**

This message is for the use case when an implementation has detected a Hot Spare has been Disabled.

May also be shown as 816f030d040affff or 0x816f030d040affff

Severity
Info

Serviceable
No

Automatically notify support
No

Alert Category
System - Other

SNMP Trap ID

CIM Information
Prefix: PLAT **ID:** 0171

User Response
No action; information only.

- **816f030d-040bffff : Hot spare disabled for [ComputerSystemElementName]. (Drive 11)**

This message is for the use case when an implementation has detected a Hot Spare has been Disabled.

May also be shown as 816f030d040bffff or 0x816f030d040bffff

Severity
Info

Serviceable
No

Automatically notify support
No

Alert Category
System - Other

SNMP Trap ID

CIM Information
Prefix: PLAT **ID:** 0171

User Response
No action; information only.

- **816f030d-040cffff : Hot spare disabled for [ComputerSystemElementName]. (Drive 12)**

This message is for the use case when an implementation has detected a Hot Spare has been Disabled.

May also be shown as 816f030d040cffff or 0x816f030d040cffff

Severity
Info

Serviceable
No

Automatically notify support
No

Alert Category
System - Other

SNMP Trap ID

CIM Information
Prefix: PLAT **ID:** 0171

User Response
No action; information only.

- **816f030d-040dffff : Hot spare disabled for [ComputerSystemElementName]. (Drive 13)**

This message is for the use case when an implementation has detected a Hot Spare has been Disabled.

May also be shown as 816f030d040dffff or 0x816f030d040dffff

Severity
Info

Serviceable
No

Automatically notify support
No

Alert Category
System - Other

SNMP Trap ID

CIM Information
Prefix: PLAT **ID:** 0171

User Response
No action; information only.

- **816f030d-0410ffff : Hot spare disabled for [ComputerSystemElementName]. (Ext Drive)**

  This message is for the use case when an implementation has detected a Hot Spare has been Disabled.

  May also be shown as 816f030d0410ffff or 0x816f030d0410ffff

  Severity
  Info

  Serviceable
  No

  Automatically notify support
  No

  Alert Category
  System - Other

  SNMP Trap ID

  CIM Information
  Prefix: PLAT **ID:** 0171

  User Response
  No action; information only.

- **816f0313-1701ffff : System [ComputerSystemElementName] has recovered from an NMI. (NMI State)**

  This message is for the use case when an implementation has detected a Software NMI has been Recovered from.

  May also be shown as 816f03131701ffff or 0x816f03131701ffff

  Severity
  Info

  Serviceable
  No

  Automatically notify support
  No

  Alert Category
  Critical - Other

  SNMP Trap ID
  50

CIM Information
Prefix: PLAT **ID:** 0230

User Response
No action; information only.

- **816f040c-2001ffff : [PhysicalMemoryElementName] Enabled on Subsystem [MemoryElementName]. (DIMM 1)**

  This message is for the use case when an implementation has detected that Memory has been Enabled.

  May also be shown as 816f040c2001ffff or 0x816f040c2001ffff

  Severity
  Info

  Serviceable
  No

  Automatically notify support
  No

  Alert Category
  System - Other

  SNMP Trap ID

  CIM Information
  Prefix: PLAT **ID:** 0130

  User Response
  No action; information only.

- **816f040c-2002ffff : [PhysicalMemoryElementName] Enabled on Subsystem [MemoryElementName]. (DIMM 2)**

  This message is for the use case when an implementation has detected that Memory has been Enabled.

  May also be shown as 816f040c2002ffff or 0x816f040c2002ffff

  Severity
  Info

  Serviceable
  No

  Automatically notify support
  No

  Alert Category
  System - Other

  SNMP Trap ID

  CIM Information
  Prefix: PLAT **ID:** 0130

  User Response
  No action; information only.

- **816f040c-2003ffff : [PhysicalMemoryElementName] Enabled on Subsystem [MemoryElementName]. (DIMM 3)**

This message is for the use case when an implementation has detected that Memory has been Enabled.

May also be shown as 816f040c2003ffff or 0x816f040c2003ffff

Severity
Info

Serviceable
No

Automatically notify support
No

Alert Category
System - Other

SNMP Trap ID

CIM Information
Prefix: PLAT **ID:** 0130

User Response
No action; information only.

- **816f040c-2004ffff : [PhysicalMemoryElementName] Enabled on Subsystem [MemoryElementName]. (DIMM 4)**

This message is for the use case when an implementation has detected that Memory has been Enabled.

May also be shown as 816f040c2004ffff or 0x816f040c2004ffff

Severity
Info

Serviceable
No

Automatically notify support
No

Alert Category
System - Other

SNMP Trap ID

CIM Information
Prefix: PLAT **ID:** 0130

User Response
No action; information only.

- **816f040c-2005ffff : [PhysicalMemoryElementName] Enabled on Subsystem [MemoryElementName]. (DIMM 5)**

This message is for the use case when an implementation has detected that Memory has been Enabled.

May also be shown as 816f040c2005ffff or 0x816f040c2005ffff

Severity
Info

Serviceable

No

Automatically notify support
No

Alert Category
System - Other

SNMP Trap ID

CIM Information
Prefix: PLAT **ID:** 0130

User Response
No action; information only.

- **816f040c-2006ffff : [PhysicalMemoryElementName] Enabled on Subsystem [MemoryElementName]. (DIMM 6)**

  This message is for the use case when an implementation has detected that Memory has been Enabled.

  May also be shown as 816f040c2006ffff or 0x816f040c2006ffff

  Severity
  Info

  Serviceable
  No

  Automatically notify support
  No

  Alert Category
  System - Other

  SNMP Trap ID

  CIM Information
  Prefix: PLAT **ID:** 0130

  User Response
  No action; information only.

- **816f040c-2007ffff : [PhysicalMemoryElementName] Enabled on Subsystem [MemoryElementName]. (DIMM 7)**

  This message is for the use case when an implementation has detected that Memory has been Enabled.

  May also be shown as 816f040c2007ffff or 0x816f040c2007ffff

  Severity
  Info

  Serviceable
  No

  Automatically notify support
  No

  Alert Category
  System - Other

  SNMP Trap ID

CIM Information
Prefix: PLAT **ID:** 0130

User Response
No action; information only.

- **816f040c-2008ffff : [PhysicalMemoryElementName] Enabled on Subsystem [MemoryElementName]. (DIMM 8)**

  This message is for the use case when an implementation has detected that Memory has been Enabled.

  May also be shown as 816f040c2008ffff or 0x816f040c2008ffff

  Severity
  Info

  Serviceable
  No

  Automatically notify support
  No

  Alert Category
  System - Other

  SNMP Trap ID

  CIM Information
  Prefix: PLAT **ID:** 0130

  User Response
  No action; information only.

- **816f040c-2009ffff : [PhysicalMemoryElementName] Enabled on Subsystem [MemoryElementName]. (DIMM 9)**

  This message is for the use case when an implementation has detected that Memory has been Enabled.

  May also be shown as 816f040c2009ffff or 0x816f040c2009ffff

  Severity
  Info

  Serviceable
  No

  Automatically notify support
  No

  Alert Category
  System - Other

  SNMP Trap ID

  CIM Information
  Prefix: PLAT **ID:** 0130

  User Response
  No action; information only.

- **816f040c-200affff : [PhysicalMemoryElementName] Enabled on Subsystem [MemoryElementName]. (DIMM 10)**

  This message is for the use case when an implementation has detected that Memory has been Enabled.

  May also be shown as 816f040c200affff or 0x816f040c200affff

  Severity
  Info

  Serviceable
  No

  Automatically notify support
  No

  Alert Category
  System - Other

  SNMP Trap ID

  CIM Information
  Prefix: PLAT **ID:** 0130

  User Response
  No action; information only.

- **816f040c-200bffff : [PhysicalMemoryElementName] Enabled on Subsystem [MemoryElementName]. (DIMM 11)**

  This message is for the use case when an implementation has detected that Memory has been Enabled.

  May also be shown as 816f040c200bffff or 0x816f040c200bffff

  Severity
  Info

  Serviceable
  No

  Automatically notify support
  No

  Alert Category
  System - Other

  SNMP Trap ID

  CIM Information
  Prefix: PLAT **ID:** 0130

  User Response
  No action; information only.

- **816f040c-200cffff : [PhysicalMemoryElementName] Enabled on Subsystem [MemoryElementName]. (DIMM 12)**

  This message is for the use case when an implementation has detected that Memory has been Enabled.

  May also be shown as 816f040c200cffff or 0x816f040c200cffff

  Severity

Info

Serviceable
No

Automatically notify support
No

Alert Category
System - Other

SNMP Trap ID

CIM Information
Prefix: PLAT **ID:** 0130

User Response
No action; information only.

- **816f040c-200dffff : [PhysicalMemoryElementName] Enabled on Subsystem [MemoryElementName]. (DIMM 13)**

  This message is for the use case when an implementation has detected that Memory has been Enabled.

  May also be shown as 816f040c200dffff or 0x816f040c200dffff

  Severity
  Info

  Serviceable
  No

  Automatically notify support
  No

  Alert Category
  System - Other

  SNMP Trap ID

  CIM Information
  Prefix: PLAT **ID:** 0130

  User Response
  No action; information only.

- **816f040c-200effff : [PhysicalMemoryElementName] Enabled on Subsystem [MemoryElementName]. (DIMM 14)**

  This message is for the use case when an implementation has detected that Memory has been Enabled.

  May also be shown as 816f040c200effff or 0x816f040c200effff

  Severity
  Info

  Serviceable
  No

  Automatically notify support
  No

  Alert Category

System - Other

SNMP Trap ID

CIM Information
Prefix: PLAT **ID:** 0130

User Response
No action; information only.

- **816f040c-200fffff : [PhysicalMemoryElementName] Enabled on Subsystem [MemoryElementName]. (DIMM 15)**

  This message is for the use case when an implementation has detected that Memory has been Enabled.

  May also be shown as 816f040c200fffff or 0x816f040c200fffff

  Severity
  Info

  Serviceable
  No

  Automatically notify support
  No

  Alert Category
  System - Other

  SNMP Trap ID

  CIM Information
  Prefix: PLAT **ID:** 0130

  User Response
  No action; information only.

- **816f040c-2010ffff : [PhysicalMemoryElementName] Enabled on Subsystem [MemoryElementName]. (DIMM 16)**

  This message is for the use case when an implementation has detected that Memory has been Enabled.

  May also be shown as 816f040c2010ffff or 0x816f040c2010ffff

  Severity
  Info

  Serviceable
  No

  Automatically notify support
  No

  Alert Category
  System - Other

  SNMP Trap ID

  CIM Information
  Prefix: PLAT **ID:** 0130

  User Response

No action; information only.

- **816f040c-2011ffff : [PhysicalMemoryElementName] Enabled on Subsystem [MemoryElementName]. (DIMM 17)**

  This message is for the use case when an implementation has detected that Memory has been Enabled.

  May also be shown as 816f040c2011ffff or 0x816f040c2011ffff

  Severity
  Info

  Serviceable
  No

  Automatically notify support
  No

  Alert Category
  System - Other

  SNMP Trap ID

  CIM Information
  Prefix: PLAT **ID:** 0130

  User Response
  No action; information only.

- **816f040c-2012ffff : [PhysicalMemoryElementName] Enabled on Subsystem [MemoryElementName]. (DIMM 18)**

  This message is for the use case when an implementation has detected that Memory has been Enabled.

  May also be shown as 816f040c2012ffff or 0x816f040c2012ffff

  Severity
  Info

  Serviceable
  No

  Automatically notify support
  No

  Alert Category
  System - Other

  SNMP Trap ID

  CIM Information
  Prefix: PLAT **ID:** 0130

  User Response
  No action; information only.

- **816f040c-2013ffff : [PhysicalMemoryElementName] Enabled on Subsystem [MemoryElementName]. (DIMM 19)**

  This message is for the use case when an implementation has detected that Memory has been Enabled.

  May also be shown as 816f040c2013ffff or 0x816f040c2013ffff

Severity
Info

Serviceable
No

Automatically notify support
No

Alert Category
System - Other

SNMP Trap ID

CIM Information
Prefix: PLAT **ID:** 0130

User Response
No action; information only.

- **816f040c-2014ffff : [PhysicalMemoryElementName] Enabled on Subsystem [MemoryElementName]. (DIMM 20)**

  This message is for the use case when an implementation has detected that Memory has been Enabled.

  May also be shown as 816f040c2014ffff or 0x816f040c2014ffff

  Severity
  Info

  Serviceable
  No

  Automatically notify support
  No

  Alert Category
  System - Other

  SNMP Trap ID

  CIM Information
  Prefix: PLAT **ID:** 0130

  User Response
  No action; information only.

- **816f040c-2015ffff : [PhysicalMemoryElementName] Enabled on Subsystem [MemoryElementName]. (DIMM 21)**

  This message is for the use case when an implementation has detected that Memory has been Enabled.

  May also be shown as 816f040c2015ffff or 0x816f040c2015ffff

  Severity
  Info

  Serviceable
  No

  Automatically notify support
  No

Alert Category
System - Other

SNMP Trap ID

CIM Information
Prefix: PLAT **ID:** 0130

User Response
No action; information only.

- **816f040c-2016ffff : [PhysicalMemoryElementName] Enabled on Subsystem [MemoryElementName]. (DIMM 22)**

  This message is for the use case when an implementation has detected that Memory has been Enabled.

  May also be shown as 816f040c2016ffff or 0x816f040c2016ffff

  Severity
  Info

  Serviceable
  No

  Automatically notify support
  No

  Alert Category
  System - Other

  SNMP Trap ID

  CIM Information
  Prefix: PLAT **ID:** 0130

  User Response
  No action; information only.

- **816f040c-2017ffff : [PhysicalMemoryElementName] Enabled on Subsystem [MemoryElementName]. (DIMM 23)**

  This message is for the use case when an implementation has detected that Memory has been Enabled.

  May also be shown as 816f040c2017ffff or 0x816f040c2017ffff

  Severity
  Info

  Serviceable
  No

  Automatically notify support
  No

  Alert Category
  System - Other

  SNMP Trap ID

  CIM Information
  Prefix: PLAT **ID:** 0130

User Response
No action; information only.

- **816f040c-2018ffff : [PhysicalMemoryElementName] Enabled on Subsystem [MemoryElementName]. (DIMM 24)**

  This message is for the use case when an implementation has detected that Memory has been Enabled.

  May also be shown as 816f040c2018ffff or 0x816f040c2018ffff

  Severity
  Info

  Serviceable
  No

  Automatically notify support
  No

  Alert Category
  System - Other

  SNMP Trap ID

  CIM Information
  Prefix: PLAT **ID:** 0130

  User Response
  No action; information only.

- **816f040c-2581ffff : [PhysicalMemoryElementName] Enabled on Subsystem [MemoryElementName]. (All DIMMS)**

  This message is for the use case when an implementation has detected that Memory has been Enabled.

  May also be shown as 816f040c2581ffff or 0x816f040c2581ffff

  Severity
  Info

  Serviceable
  No

  Automatically notify support
  No

  Alert Category
  System - Other

  SNMP Trap ID

  CIM Information
  Prefix: PLAT **ID:** 0130

  User Response
  No action; information only. One of the DIMMs :

- **816f0413-2582ffff : A PCI PERR recovery has occurred on system [ComputerSystemElementName]. (PCIs)**

  This message is for the use case when an implementation has detected a PCI PERR recovered.

May also be shown as 816f04132582ffff or 0x816f04132582ffff

Severity
Info

Serviceable
No

Automatically notify support
No

Alert Category
Critical - Other

SNMP Trap ID
50

CIM Information
Prefix: PLAT **ID:** 0233

User Response
No action; information only.

- **816f0507-0301ffff : [ProcessorElementName] has Recovered from a Configuration Mismatch. (CPU 1)**

  This message is for the use case when an implementation has Recovered from a Processor Configuration Mismatch.

  May also be shown as 816f05070301ffff or 0x816f05070301ffff

  Severity
  Info

  Serviceable
  No

  Automatically notify support
  No

  Alert Category
  Critical - CPU

  SNMP Trap ID
  40

  CIM Information
  Prefix: PLAT **ID:** 0063

  User Response
  No action; information only.

- **816f0507-0302ffff : [ProcessorElementName] has Recovered from a Configuration Mismatch. (CPU 2)**

  This message is for the use case when an implementation has Recovered from a Processor Configuration Mismatch.

  May also be shown as 816f05070302ffff or 0x816f05070302ffff

  Severity
  Info

  Serviceable

No

Automatically notify support
No

Alert Category
Critical - CPU

SNMP Trap ID
40

CIM Information
Prefix: PLAT **ID:** 0063

User Response
No action; information only.

- **816f0507-2584ffff : [ProcessorElementName] has Recovered from a Configuration Mismatch. (All CPUs)**

  This message is for the use case when an implementation has Recovered from a Processor Configuration Mismatch.

  May also be shown as 816f05072584ffff or 0x816f05072584ffff

  Severity
  Info

  Serviceable
  No

  Automatically notify support
  No

  Alert Category
  Critical - CPU

  SNMP Trap ID
  40

  CIM Information
  Prefix: PLAT **ID:** 0063

  User Response
  No action; information only. One of the CPUs :

- **816f050c-2001ffff : Memory Logging Limit Removed for [PhysicalMemoryElementName] on Subsystem [MemoryElementName]. (DIMM 1)**

  This message is for the use case when an implementation has detected that the Memory Logging Limit has been Removed.

  May also be shown as 816f050c2001ffff or 0x816f050c2001ffff

  Severity
  Info

  Serviceable
  No

  Automatically notify support
  No

  Alert Category

Warning - Memory

SNMP Trap ID
43

CIM Information
Prefix: PLAT **ID:** 0145

User Response
No action; information only.

- **816f050c-2002ffff : Memory Logging Limit Removed for [PhysicalMemoryElementName] on Subsystem [MemoryElementName]. (DIMM 2)**

  This message is for the use case when an implementation has detected that the Memory Logging Limit has been Removed.

  May also be shown as 816f050c2002ffff or 0x816f050c2002ffff

  Severity
  Info

  Serviceable
  No

  Automatically notify support
  No

  Alert Category
  Warning - Memory

  SNMP Trap ID
  43

  CIM Information
  Prefix: PLAT **ID:** 0145

  User Response
  No action; information only.

- **816f050c-2003ffff : Memory Logging Limit Removed for [PhysicalMemoryElementName] on Subsystem [MemoryElementName]. (DIMM 3)**

  This message is for the use case when an implementation has detected that the Memory Logging Limit has been Removed.

  May also be shown as 816f050c2003ffff or 0x816f050c2003ffff

  Severity
  Info

  Serviceable
  No

  Automatically notify support
  No

  Alert Category
  Warning - Memory

  SNMP Trap ID
  43

  CIM Information

Prefix: PLAT **ID:** 0145

User Response
No action; information only.

- **816f050c-2004ffff : Memory Logging Limit Removed for [PhysicalMemoryElementName] on Subsystem [MemoryElementName]. (DIMM 4)**

  This message is for the use case when an implementation has detected that the Memory Logging Limit has been Removed.

  May also be shown as 816f050c2004ffff or 0x816f050c2004ffff

  Severity
  Info

  Serviceable
  No

  Automatically notify support
  No

  Alert Category
  Warning - Memory

  SNMP Trap ID
  43

  CIM Information
  Prefix: PLAT **ID:** 0145

  User Response
  No action; information only.

- **816f050c-2005ffff : Memory Logging Limit Removed for [PhysicalMemoryElementName] on Subsystem [MemoryElementName]. (DIMM 5)**

  This message is for the use case when an implementation has detected that the Memory Logging Limit has been Removed.

  May also be shown as 816f050c2005ffff or 0x816f050c2005ffff

  Severity
  Info

  Serviceable
  No

  Automatically notify support
  No

  Alert Category
  Warning - Memory

  SNMP Trap ID
  43

  CIM Information
  Prefix: PLAT **ID:** 0145

  User Response
  No action; information only.

- **816f050c-2006ffff : Memory Logging Limit Removed for [PhysicalMemoryElementName] on Subsystem [MemoryElementName]. (DIMM 6)**

  This message is for the use case when an implementation has detected that the Memory Logging Limit has been Removed.

  May also be shown as 816f050c2006ffff or 0x816f050c2006ffff

  Severity
  Info

  Serviceable
  No

  Automatically notify support
  No

  Alert Category
  Warning - Memory

  SNMP Trap ID
  43

  CIM Information
  Prefix: PLAT **ID:** 0145

  User Response
  No action; information only.

- **816f050c-2007ffff : Memory Logging Limit Removed for [PhysicalMemoryElementName] on Subsystem [MemoryElementName]. (DIMM 7)**

  This message is for the use case when an implementation has detected that the Memory Logging Limit has been Removed.

  May also be shown as 816f050c2007ffff or 0x816f050c2007ffff

  Severity
  Info

  Serviceable
  No

  Automatically notify support
  No

  Alert Category
  Warning - Memory

  SNMP Trap ID
  43

  CIM Information
  Prefix: PLAT **ID:** 0145

  User Response
  No action; information only.

- **816f050c-2008ffff : Memory Logging Limit Removed for [PhysicalMemoryElementName] on Subsystem [MemoryElementName]. (DIMM 8)**

  This message is for the use case when an implementation has detected that the Memory Logging Limit has been Removed.

May also be shown as 816f050c2008ffff or 0x816f050c2008ffff

Severity
Info

Serviceable
No

Automatically notify support
No

Alert Category
Warning - Memory

SNMP Trap ID
43

CIM Information
Prefix: PLAT **ID:** 0145

User Response
No action; information only.

- **816f050c-2009ffff : Memory Logging Limit Removed for [PhysicalMemoryElementName] on Subsystem [MemoryElementName]. (DIMM 9)**

  This message is for the use case when an implementation has detected that the Memory Logging Limit has been Removed.

  May also be shown as 816f050c2009ffff or 0x816f050c2009ffff

  Severity
  Info

  Serviceable
  No

  Automatically notify support
  No

  Alert Category
  Warning - Memory

  SNMP Trap ID
  43

  CIM Information
  Prefix: PLAT **ID:** 0145

  User Response
  No action; information only.

- **816f050c-200affff : Memory Logging Limit Removed for [PhysicalMemoryElementName] on Subsystem [MemoryElementName]. (DIMM 10)**

  This message is for the use case when an implementation has detected that the Memory Logging Limit has been Removed.

  May also be shown as 816f050c200affff or 0x816f050c200affff

  Severity
  Info

  Serviceable

No

Automatically notify support
No

Alert Category
Warning - Memory

SNMP Trap ID
43

CIM Information
Prefix: PLAT **ID:** 0145

User Response
No action; information only.

- **816f050c-200bffff : Memory Logging Limit Removed for [PhysicalMemoryElementName] on Subsystem [MemoryElementName]. (DIMM 11)**

  This message is for the use case when an implementation has detected that the Memory Logging Limit has been Removed.

  May also be shown as 816f050c200bffff or 0x816f050c200bffff

  Severity
  Info

  Serviceable
  No

  Automatically notify support
  No

  Alert Category
  Warning - Memory

  SNMP Trap ID
  43

  CIM Information
  Prefix: PLAT **ID:** 0145

  User Response
  No action; information only.

- **816f050c-200cffff : Memory Logging Limit Removed for [PhysicalMemoryElementName] on Subsystem [MemoryElementName]. (DIMM 12)**

  This message is for the use case when an implementation has detected that the Memory Logging Limit has been Removed.

  May also be shown as 816f050c200cffff or 0x816f050c200cffff

  Severity
  Info

  Serviceable
  No

  Automatically notify support
  No

  Alert Category

Warning - Memory

SNMP Trap ID
43

CIM Information
Prefix: PLAT **ID:** 0145

User Response
No action; information only.

- **816f050c-200dffff : Memory Logging Limit Removed for [PhysicalMemoryElementName] on Subsystem [MemoryElementName]. (DIMM 13)**

  This message is for the use case when an implementation has detected that the Memory Logging Limit has been Removed.

  May also be shown as 816f050c200dffff or 0x816f050c200dffff

  Severity
  Info

  Serviceable
  No

  Automatically notify support
  No

  Alert Category
  Warning - Memory

  SNMP Trap ID
  43

  CIM Information
  Prefix: PLAT **ID:** 0145

  User Response
  No action; information only.

- **816f050c-200effff : Memory Logging Limit Removed for [PhysicalMemoryElementName] on Subsystem [MemoryElementName]. (DIMM 14)**

  This message is for the use case when an implementation has detected that the Memory Logging Limit has been Removed.

  May also be shown as 816f050c200effff or 0x816f050c200effff

  Severity
  Info

  Serviceable
  No

  Automatically notify support
  No

  Alert Category
  Warning - Memory

  SNMP Trap ID
  43

  CIM Information

Prefix: PLAT **ID:** 0145

User Response
No action; information only.

- **816f050c-200fffff : Memory Logging Limit Removed for [PhysicalMemoryElementName] on Subsystem [MemoryElementName]. (DIMM 15)**

  This message is for the use case when an implementation has detected that the Memory Logging Limit has been Removed.

  May also be shown as 816f050c200fffff or 0x816f050c200fffff

  Severity
  Info

  Serviceable
  No

  Automatically notify support
  No

  Alert Category
  Warning - Memory

  SNMP Trap ID
  43

  CIM Information
  Prefix: PLAT **ID:** 0145

  User Response
  No action; information only.

- **816f050c-2010ffff : Memory Logging Limit Removed for [PhysicalMemoryElementName] on Subsystem [MemoryElementName]. (DIMM 16)**

  This message is for the use case when an implementation has detected that the Memory Logging Limit has been Removed.

  May also be shown as 816f050c2010ffff or 0x816f050c2010ffff

  Severity
  Info

  Serviceable
  No

  Automatically notify support
  No

  Alert Category
  Warning - Memory

  SNMP Trap ID
  43

  CIM Information
  Prefix: PLAT **ID:** 0145

  User Response
  No action; information only.

- **816f050c-2011ffff : Memory Logging Limit Removed for [PhysicalMemoryElementName] on Subsystem [MemoryElementName]. (DIMM 17)**

  This message is for the use case when an implementation has detected that the Memory Logging Limit has been Removed.

  May also be shown as 816f050c2011ffff or 0x816f050c2011ffff

  Severity
  Info

  Serviceable
  No

  Automatically notify support
  No

  Alert Category
  Warning - Memory

  SNMP Trap ID
  43

  CIM Information
  Prefix: PLAT **ID:** 0145

  User Response
  No action; information only.

- **816f050c-2012ffff : Memory Logging Limit Removed for [PhysicalMemoryElementName] on Subsystem [MemoryElementName]. (DIMM 18)**

  This message is for the use case when an implementation has detected that the Memory Logging Limit has been Removed.

  May also be shown as 816f050c2012ffff or 0x816f050c2012ffff

  Severity
  Info

  Serviceable
  No

  Automatically notify support
  No

  Alert Category
  Warning - Memory

  SNMP Trap ID
  43

  CIM Information
  Prefix: PLAT **ID:** 0145

  User Response
  No action; information only.

- **816f050c-2013ffff : Memory Logging Limit Removed for [PhysicalMemoryElementName] on Subsystem [MemoryElementName]. (DIMM 19)**

  This message is for the use case when an implementation has detected that the Memory Logging Limit has been Removed.

May also be shown as 816f050c2013ffff or 0x816f050c2013ffff

Severity
Info

Serviceable
No

Automatically notify support
No

Alert Category
Warning - Memory

SNMP Trap ID
43

CIM Information
Prefix: PLAT **ID:** 0145

User Response
No action; information only.

- **816f050c-2014ffff : Memory Logging Limit Removed for [PhysicalMemoryElementName] on Subsystem [MemoryElementName]. (DIMM 20)**

  This message is for the use case when an implementation has detected that the Memory Logging Limit has been Removed.

  May also be shown as 816f050c2014ffff or 0x816f050c2014ffff

  Severity
  Info

  Serviceable
  No

  Automatically notify support
  No

  Alert Category
  Warning - Memory

  SNMP Trap ID
  43

  CIM Information
  Prefix: PLAT **ID:** 0145

  User Response
  No action; information only.

- **816f050c-2015ffff : Memory Logging Limit Removed for [PhysicalMemoryElementName] on Subsystem [MemoryElementName]. (DIMM 21)**

  This message is for the use case when an implementation has detected that the Memory Logging Limit has been Removed.

  May also be shown as 816f050c2015ffff or 0x816f050c2015ffff

  Severity
  Info

  Serviceable

No

Automatically notify support
No

Alert Category
Warning - Memory

SNMP Trap ID
43

CIM Information
Prefix: PLAT **ID:** 0145

User Response
No action; information only.

- **816f050c-2016ffff : Memory Logging Limit Removed for [PhysicalMemoryElementName] on Subsystem [MemoryElementName]. (DIMM 22)**

  This message is for the use case when an implementation has detected that the Memory Logging Limit has been Removed.

  May also be shown as 816f050c2016ffff or 0x816f050c2016ffff

  Severity
  Info

  Serviceable
  No

  Automatically notify support
  No

  Alert Category
  Warning - Memory

  SNMP Trap ID
  43

  CIM Information
  Prefix: PLAT **ID:** 0145

  User Response
  No action; information only.

- **816f050c-2017ffff : Memory Logging Limit Removed for [PhysicalMemoryElementName] on Subsystem [MemoryElementName]. (DIMM 23)**

  This message is for the use case when an implementation has detected that the Memory Logging Limit has been Removed.

  May also be shown as 816f050c2017ffff or 0x816f050c2017ffff

  Severity
  Info

  Serviceable
  No

  Automatically notify support
  No

  Alert Category

Warning - Memory

SNMP Trap ID
43

CIM Information
Prefix: PLAT **ID:** 0145

User Response
No action; information only.

- **816f050c-2018ffff : Memory Logging Limit Removed for [PhysicalMemoryElementName] on Subsystem [MemoryElementName]. (DIMM 24)**

  This message is for the use case when an implementation has detected that the Memory Logging Limit has been Removed.

  May also be shown as 816f050c2018ffff or 0x816f050c2018ffff

  Severity
  Info

  Serviceable
  No

  Automatically notify support
  No

  Alert Category
  Warning - Memory

  SNMP Trap ID
  43

  CIM Information
  Prefix: PLAT **ID:** 0145

  User Response
  No action; information only.

- **816f050c-2581ffff : Memory Logging Limit Removed for [PhysicalMemoryElementName] on Subsystem [MemoryElementName]. (All DIMMS)**

  This message is for the use case when an implementation has detected that the Memory Logging Limit has been Removed.

  May also be shown as 816f050c2581ffff or 0x816f050c2581ffff

  Severity
  Info

  Serviceable
  No

  Automatically notify support
  No

  Alert Category
  Warning - Memory

  SNMP Trap ID
  43

  CIM Information

Prefix: PLAT **ID:** 0145

User Response
No action; information only. One of the DIMMs :

- **816f050d-0400ffff : Critical Array [ComputerSystemElementName] has deasserted. (Drive 0)**

This message is for the use case when an implementation has detected that a Critiacal Array has deasserted.

May also be shown as 816f050d0400ffff or 0x816f050d0400ffff

Severity
Info

Serviceable
No

Automatically notify support
No

Alert Category
Critical - Hard Disk drive

SNMP Trap ID
5

CIM Information
Prefix: PLAT **ID:** 0175

User Response
No action; information only.

- **816f050d-0401ffff : Critical Array [ComputerSystemElementName] has deasserted. (Drive 1)**

This message is for the use case when an implementation has detected that a Critiacal Array has deasserted.

May also be shown as 816f050d0401ffff or 0x816f050d0401ffff

Severity
Info

Serviceable
No

Automatically notify support
No

Alert Category
Critical - Hard Disk drive

SNMP Trap ID
5

CIM Information
Prefix: PLAT **ID:** 0175

User Response
No action; information only.

- **816f050d-0402ffff : Critical Array [ComputerSystemElementName] has deasserted. (Drive 2)**

This message is for the use case when an implementation has detected that a Critiacal Array has deasserted.

May also be shown as 816f050d0402ffff or 0x816f050d0402ffff

Severity
Info

Serviceable
No

Automatically notify support
No

Alert Category
Critical - Hard Disk drive

SNMP Trap ID
5

CIM Information
Prefix: PLAT **ID:** 0175

User Response
No action; information only.

- **816f050d-0403ffff : Critical Array [ComputerSystemElementName] has deasserted. (Drive 3)**

This message is for the use case when an implementation has detected that a Critiacal Array has deasserted.

May also be shown as 816f050d0403ffff or 0x816f050d0403ffff

Severity
Info

Serviceable
No

Automatically notify support
No

Alert Category
Critical - Hard Disk drive

SNMP Trap ID
5

CIM Information
Prefix: PLAT **ID:** 0175

User Response
No action; information only.

- **816f050d-0404ffff : Critical Array [ComputerSystemElementName] has deasserted. (Drive 4)**

This message is for the use case when an implementation has detected that a Critiacal Array has deasserted.

May also be shown as 816f050d0404ffff or 0x816f050d0404ffff

Severity
Info

Serviceable
No

Automatically notify support
No

Alert Category
Critical - Hard Disk drive

SNMP Trap ID
5

CIM Information
Prefix: PLAT **ID:** 0175

User Response
No action; information only.

- **816f050d-0405ffff : Critical Array [ComputerSystemElementName] has deasserted. (Drive 5)**

This message is for the use case when an implementation has detected that a Critiacal Array has deasserted.

May also be shown as 816f050d0405ffff or 0x816f050d0405ffff

Severity
Info

Serviceable
No

Automatically notify support
No

Alert Category
Critical - Hard Disk drive

SNMP Trap ID
5

CIM Information
Prefix: PLAT **ID:** 0175

User Response
No action; information only.

- **816f050d-0406ffff : Critical Array [ComputerSystemElementName] has deasserted. (Drive 6)**

This message is for the use case when an implementation has detected that a Critiacal Array has deasserted.

May also be shown as 816f050d0406ffff or 0x816f050d0406ffff

Severity
Info

Serviceable
No

Automatically notify support
No

Alert Category
Critical - Hard Disk drive

SNMP Trap ID
5

CIM Information
Prefix: PLAT **ID:** 0175

User Response
No action; information only.

- **816f050d-0407ffff : Critical Array [ComputerSystemElementName] has deasserted. (Drive 7)**

This message is for the use case when an implementation has detected that a Critiacal Array has deasserted.

May also be shown as 816f050d0407ffff or 0x816f050d0407ffff

Severity
Info

Serviceable
No

Automatically notify support
No

Alert Category
Critical - Hard Disk drive

SNMP Trap ID
5

CIM Information
Prefix: PLAT **ID:** 0175

User Response
No action; information only.

- **816f050d-0408ffff : Critical Array [ComputerSystemElementName] has deasserted. (Drive 8)**

This message is for the use case when an implementation has detected that a Critiacal Array has deasserted.

May also be shown as 816f050d0408ffff or 0x816f050d0408ffff

Severity
Info

Serviceable
No

Automatically notify support
No

Alert Category
Critical - Hard Disk drive

SNMP Trap ID
5

CIM Information
Prefix: PLAT **ID:** 0175

User Response
No action; information only.

- **816f050d-0409ffff : Critical Array [ComputerSystemElementName] has deasserted. (Drive 9)**

  This message is for the use case when an implementation has detected that a Critiacal Array has deasserted.

  May also be shown as 816f050d0409ffff or 0x816f050d0409ffff

  Severity
  Info

  Serviceable
  No

  Automatically notify support
  No

  Alert Category
  Critical - Hard Disk drive

  SNMP Trap ID
  5

  CIM Information
  Prefix: PLAT **ID:** 0175

  User Response
  No action; information only.

- **816f050d-040affff : Critical Array [ComputerSystemElementName] has deasserted. (Drive 10)**

  This message is for the use case when an implementation has detected that a Critiacal Array has deasserted.

  May also be shown as 816f050d040affff or 0x816f050d040affff

  Severity
  Info

  Serviceable
  No

  Automatically notify support
  No

  Alert Category
  Critical - Hard Disk drive

  SNMP Trap ID
  5

  CIM Information
  Prefix: PLAT **ID:** 0175

  User Response
  No action; information only.

- **816f050d-040bffff : Critical Array [ComputerSystemElementName] has deasserted. (Drive 11)**

  This message is for the use case when an implementation has detected that a Critiacal Array has deasserted.

  May also be shown as 816f050d040bffff or 0x816f050d040bffff

  Severity

Info

Serviceable
No

Automatically notify support
No

Alert Category
Critical - Hard Disk drive

SNMP Trap ID
5

CIM Information
Prefix: PLAT **ID:** 0175

User Response
No action; information only.

- **816f050d-040cffff : Critical Array [ComputerSystemElementName] has deasserted. (Drive 12)**

  This message is for the use case when an implementation has detected that a Critiacal Array has deasserted.

  May also be shown as 816f050d040cffff or 0x816f050d040cffff

  Severity
  Info

  Serviceable
  No

  Automatically notify support
  No

  Alert Category
  Critical - Hard Disk drive

  SNMP Trap ID
  5

  CIM Information
  Prefix: PLAT **ID:** 0175

  User Response
  No action; information only.

- **816f050d-040dffff : Critical Array [ComputerSystemElementName] has deasserted. (Drive 13)**

  This message is for the use case when an implementation has detected that a Critiacal Array has deasserted.

  May also be shown as 816f050d040dffff or 0x816f050d040dffff

  Severity
  Info

  Serviceable
  No

  Automatically notify support
  No

  Alert Category

Critical - Hard Disk drive

SNMP Trap ID
5

CIM Information
Prefix: PLAT **ID:** 0175

User Response
No action; information only.

- **816f050d-0410ffff : Critical Array [ComputerSystemElementName] has deasserted. (Ext Drive)**

This message is for the use case when an implementation has detected that a Critiacal Array has deasserted.

May also be shown as 816f050d0410ffff or 0x816f050d0410ffff

Severity
Info

Serviceable
No

Automatically notify support
No

Alert Category
Critical - Hard Disk drive

SNMP Trap ID
5

CIM Information
Prefix: PLAT **ID:** 0175

User Response
No action; information only.

- **816f0513-2582ffff : A PCI SERR on system [ComputerSystemElementName] has deasserted. (PCIs)**

This message is for the use case when an implementation has detected a PCI SERR deassertion.

May also be shown as 816f05132582ffff or 0x816f05132582ffff

Severity
Info

Serviceable
No

Automatically notify support
No

Alert Category
Critical - Other

SNMP Trap ID
50

CIM Information
Prefix: PLAT **ID:** 0235

User Response
No action; information only.

- **816f0607-0301ffff : An SM BIOS Uncorrectable CPU complex error for [ProcessorElementName] has deasserted. (CPU 1)**

  This message is for the use case when an SM BIOS Uncorrectable CPU complex error has deasserted.

  May also be shown as 816f06070301ffff or 0x816f06070301ffff

  Severity
  Info

  Serviceable
  No

  Automatically notify support
  No

  Alert Category
  Critical - CPU

  SNMP Trap ID
  40

  CIM Information
  Prefix: PLAT **ID:** 0817

  User Response
  No action; information only.

- **816f0607-0302ffff : An SM BIOS Uncorrectable CPU complex error for [ProcessorElementName] has deasserted. (CPU 2)**

  This message is for the use case when an SM BIOS Uncorrectable CPU complex error has deasserted.

  May also be shown as 816f06070302ffff or 0x816f06070302ffff

  Severity
  Info

  Serviceable
  No

  Automatically notify support
  No

  Alert Category
  Critical - CPU

  SNMP Trap ID
  40

  CIM Information
  Prefix: PLAT **ID:** 0817

  User Response
  No action; information only.

- **816f0607-2584ffff : An SM BIOS Uncorrectable CPU complex error for [ProcessorElementName] has deasserted. (All CPUs)**

  This message is for the use case when an SM BIOS Uncorrectable CPU complex error has deasserted.

  May also be shown as 816f06072584ffff or 0x816f06072584ffff

  Severity

Info

Serviceable
No

Automatically notify support
No

Alert Category
Critical - CPU

SNMP Trap ID
40

CIM Information
Prefix: PLAT **ID:** 0817

User Response
No action; information only. One of the CPUs :

- **816f0608-1301ffff : [PowerSupplyElementName] Configuration is OK. (PS Configuration)**

This message is for the use case when an implementation when a Power Supply configuration is OK.

May also be shown as 816f06081301ffff or 0x816f06081301ffff

Severity
Info

Serviceable
No

Automatically notify support
No

Alert Category
Critical - Power

SNMP Trap ID
4

CIM Information
Prefix: PLAT **ID:** 0105

User Response
No action; information only.

- **816f060d-0400ffff : Array in system [ComputerSystemElementName] has been restored. (Drive 0)**

This message is for the use case when an implementation has detected that a Failed Array has been Restored.

May also be shown as 816f060d0400ffff or 0x816f060d0400ffff

Severity
Info

Serviceable
No

Automatically notify support
No

Alert Category
Critical - Hard Disk drive

SNMP Trap ID
5

CIM Information
Prefix: PLAT **ID:** 0177

User Response
No action; information only.

- **816f060d-0401ffff : Array in system [ComputerSystemElementName] has been restored. (Drive 1)**

This message is for the use case when an implementation has detected that a Failed Array has been Restored.

May also be shown as 816f060d0401ffff or 0x816f060d0401ffff

Severity
Info

Serviceable
No

Automatically notify support
No

Alert Category
Critical - Hard Disk drive

SNMP Trap ID
5

CIM Information
Prefix: PLAT **ID:** 0177

User Response
No action; information only.

- **816f060d-0402ffff : Array in system [ComputerSystemElementName] has been restored. (Drive 2)**

This message is for the use case when an implementation has detected that a Failed Array has been Restored.

May also be shown as 816f060d0402ffff or 0x816f060d0402ffff

Severity
Info

Serviceable
No

Automatically notify support
No

Alert Category
Critical - Hard Disk drive

SNMP Trap ID
5

CIM Information
Prefix: PLAT **ID:** 0177

User Response
No action; information only.

- **816f060d-0403ffff : Array in system [ComputerSystemElementName] has been restored. (Drive 3)**

  This message is for the use case when an implementation has detected that a Failed Array has been Restored.

  May also be shown as 816f060d0403ffff or 0x816f060d0403ffff

  Severity
  Info

  Serviceable
  No

  Automatically notify support
  No

  Alert Category
  Critical - Hard Disk drive

  SNMP Trap ID
  5

  CIM Information
  Prefix: PLAT **ID:** 0177

  User Response
  No action; information only.

- **816f060d-0404ffff : Array in system [ComputerSystemElementName] has been restored. (Drive 4)**

  This message is for the use case when an implementation has detected that a Failed Array has been Restored.

  May also be shown as 816f060d0404ffff or 0x816f060d0404ffff

  Severity
  Info

  Serviceable
  No

  Automatically notify support
  No

  Alert Category
  Critical - Hard Disk drive

  SNMP Trap ID
  5

  CIM Information
  Prefix: PLAT **ID:** 0177

  User Response
  No action; information only.

- **816f060d-0405ffff : Array in system [ComputerSystemElementName] has been restored. (Drive 5)**

  This message is for the use case when an implementation has detected that a Failed Array has been Restored.

  May also be shown as 816f060d0405ffff or 0x816f060d0405ffff

  Severity

Info

Serviceable
No

Automatically notify support
No

Alert Category
Critical - Hard Disk drive

SNMP Trap ID
5

CIM Information
Prefix: PLAT **ID:** 0177

User Response
No action; information only.

- **816f060d-0406ffff : Array in system [ComputerSystemElementName] has been restored. (Drive 6)**

  This message is for the use case when an implementation has detected that a Failed Array has been Restored.

  May also be shown as 816f060d0406ffff or 0x816f060d0406ffff

  Severity
  Info

  Serviceable
  No

  Automatically notify support
  No

  Alert Category
  Critical - Hard Disk drive

  SNMP Trap ID
  5

  CIM Information
  Prefix: PLAT **ID:** 0177

  User Response
  No action; information only.

- **816f060d-0407ffff : Array in system [ComputerSystemElementName] has been restored. (Drive 7)**

  This message is for the use case when an implementation has detected that a Failed Array has been Restored.

  May also be shown as 816f060d0407ffff or 0x816f060d0407ffff

  Severity
  Info

  Serviceable
  No

  Automatically notify support
  No

  Alert Category

Critical - Hard Disk drive

SNMP Trap ID
5

CIM Information
Prefix: PLAT **ID:** 0177

User Response
No action; information only.

- **816f060d-0408ffff : Array in system [ComputerSystemElementName] has been restored. (Drive 8)**

This message is for the use case when an implementation has detected that a Failed Array has been Restored.

May also be shown as 816f060d0408ffff or 0x816f060d0408ffff

Severity
Info

Serviceable
No

Automatically notify support
No

Alert Category
Critical - Hard Disk drive

SNMP Trap ID
5

CIM Information
Prefix: PLAT **ID:** 0177

User Response
No action; information only.

- **816f060d-0409ffff : Array in system [ComputerSystemElementName] has been restored. (Drive 9)**

This message is for the use case when an implementation has detected that a Failed Array has been Restored.

May also be shown as 816f060d0409ffff or 0x816f060d0409ffff

Severity
Info

Serviceable
No

Automatically notify support
No

Alert Category
Critical - Hard Disk drive

SNMP Trap ID
5

CIM Information
Prefix: PLAT **ID:** 0177

User Response

No action; information only.

- **816f060d-040affff : Array in system [ComputerSystemElementName] has been restored. (Drive 10)**

  This message is for the use case when an implementation has detected that a Failed Array has been Restored.

  May also be shown as 816f060d040affff or 0x816f060d040affff

  Severity
  Info

  Serviceable
  No

  Automatically notify support
  No

  Alert Category
  Critical - Hard Disk drive

  SNMP Trap ID
  5

  CIM Information
  Prefix: PLAT **ID:** 0177

  User Response
  No action; information only.

- **816f060d-040bffff : Array in system [ComputerSystemElementName] has been restored. (Drive 11)**

  This message is for the use case when an implementation has detected that a Failed Array has been Restored.

  May also be shown as 816f060d040bffff or 0x816f060d040bffff

  Severity
  Info

  Serviceable
  No

  Automatically notify support
  No

  Alert Category
  Critical - Hard Disk drive

  SNMP Trap ID
  5

  CIM Information
  Prefix: PLAT **ID:** 0177

  User Response
  No action; information only.

- **816f060d-040cffff : Array in system [ComputerSystemElementName] has been restored. (Drive 12)**

  This message is for the use case when an implementation has detected that a Failed Array has been Restored.

  May also be shown as 816f060d040cffff or 0x816f060d040cffff

Severity
Info

Serviceable
No

Automatically notify support
No

Alert Category
Critical - Hard Disk drive

SNMP Trap ID
5

CIM Information
Prefix: PLAT **ID:** 0177

User Response
No action; information only.

- **816f060d-040dffff : Array in system [ComputerSystemElementName] has been restored. (Drive 13)**

  This message is for the use case when an implementation has detected that a Failed Array has been Restored.

  May also be shown as 816f060d040dffff or 0x816f060d040dffff

  Severity
  Info

  Serviceable
  No

  Automatically notify support
  No

  Alert Category
  Critical - Hard Disk drive

  SNMP Trap ID
  5

  CIM Information
  Prefix: PLAT **ID:** 0177

  User Response
  No action; information only.

- **816f060d-0410ffff : Array in system [ComputerSystemElementName] has been restored. (Ext Drive)**

  This message is for the use case when an implementation has detected that a Failed Array has been Restored.

  May also be shown as 816f060d0410ffff or 0x816f060d0410ffff

  Severity
  Info

  Serviceable
  No

  Automatically notify support
  No

Alert Category
Critical - Hard Disk drive

SNMP Trap ID
5

CIM Information
Prefix: PLAT **ID:** 0177

User Response
No action; information only.

- **816f070c-2001ffff : Configuration error for [PhysicalMemoryElementName] on Subsystem [MemoryElementName]has deasserted. (DIMM 1)**

  This message is for the use case when an implementation has detected a Memory DIMM configuration error has deasserted.

  May also be shown as 816f070c2001ffff or 0x816f070c2001ffff

  Severity
  Info

  Serviceable
  No

  Automatically notify support
  No

  Alert Category
  Critical - Memory

  SNMP Trap ID
  41

  CIM Information
  Prefix: PLAT **ID:** 0127

  User Response
  No action; information only.

- **816f070c-2002ffff : Configuration error for [PhysicalMemoryElementName] on Subsystem [MemoryElementName]has deasserted. (DIMM 2)**

  This message is for the use case when an implementation has detected a Memory DIMM configuration error has deasserted.

  May also be shown as 816f070c2002ffff or 0x816f070c2002ffff

  Severity
  Info

  Serviceable
  No

  Automatically notify support
  No

  Alert Category
  Critical - Memory

  SNMP Trap ID
  41

CIM Information
Prefix: PLAT **ID:** 0127

User Response
No action; information only.

- **816f070c-2003ffff : Configuration error for [PhysicalMemoryElementName] on Subsystem [MemoryElementName]has deasserted. (DIMM 3)**

  This message is for the use case when an implementation has detected a Memory DIMM configuration error has deasserted.

  May also be shown as 816f070c2003ffff or 0x816f070c2003ffff

  Severity
  Info

  Serviceable
  No

  Automatically notify support
  No

  Alert Category
  Critical - Memory

  SNMP Trap ID
  41

  CIM Information
  Prefix: PLAT **ID:** 0127

  User Response
  No action; information only.

- **816f070c-2004ffff : Configuration error for [PhysicalMemoryElementName] on Subsystem [MemoryElementName]has deasserted. (DIMM 4)**

  This message is for the use case when an implementation has detected a Memory DIMM configuration error has deasserted.

  May also be shown as 816f070c2004ffff or 0x816f070c2004ffff

  Severity
  Info

  Serviceable
  No

  Automatically notify support
  No

  Alert Category
  Critical - Memory

  SNMP Trap ID
  41

  CIM Information
  Prefix: PLAT **ID:** 0127

  User Response
  No action; information only.

- **816f070c-2005ffff : Configuration error for [PhysicalMemoryElementName] on Subsystem [MemoryElementName]has deasserted. (DIMM 5)**

  This message is for the use case when an implementation has detected a Memory DIMM configuration error has deasserted.

  May also be shown as 816f070c2005ffff or 0x816f070c2005ffff

  Severity
  Info

  Serviceable
  No

  Automatically notify support
  No

  Alert Category
  Critical - Memory

  SNMP Trap ID
  41

  CIM Information
  Prefix: PLAT **ID:** 0127

  User Response
  No action; information only.

- **816f070c-2006ffff : Configuration error for [PhysicalMemoryElementName] on Subsystem [MemoryElementName]has deasserted. (DIMM 6)**

  This message is for the use case when an implementation has detected a Memory DIMM configuration error has deasserted.

  May also be shown as 816f070c2006ffff or 0x816f070c2006ffff

  Severity
  Info

  Serviceable
  No

  Automatically notify support
  No

  Alert Category
  Critical - Memory

  SNMP Trap ID
  41

  CIM Information
  Prefix: PLAT **ID:** 0127

  User Response
  No action; information only.

- **816f070c-2007ffff : Configuration error for [PhysicalMemoryElementName] on Subsystem [MemoryElementName]has deasserted. (DIMM 7)**

  This message is for the use case when an implementation has detected a Memory DIMM configuration error has deasserted.

May also be shown as 816f070c2007ffff or 0x816f070c2007ffff

Severity
Info

Serviceable
No

Automatically notify support
No

Alert Category
Critical - Memory

SNMP Trap ID
41

CIM Information
Prefix: PLAT **ID:** 0127

User Response
No action; information only.

- **816f070c-2008ffff : Configuration error for [PhysicalMemoryElementName] on Subsystem [MemoryElementName]has deasserted. (DIMM 8)**

  This message is for the use case when an implementation has detected a Memory DIMM configuration error has deasserted.

  May also be shown as 816f070c2008ffff or 0x816f070c2008ffff

  Severity
  Info

  Serviceable
  No

  Automatically notify support
  No

  Alert Category
  Critical - Memory

  SNMP Trap ID
  41

  CIM Information
  Prefix: PLAT **ID:** 0127

  User Response
  No action; information only.

- **816f070c-2009ffff : Configuration error for [PhysicalMemoryElementName] on Subsystem [MemoryElementName]has deasserted. (DIMM 9)**

  This message is for the use case when an implementation has detected a Memory DIMM configuration error has deasserted.

  May also be shown as 816f070c2009ffff or 0x816f070c2009ffff

  Severity
  Info

  Serviceable

No

Automatically notify support
No

Alert Category
Critical - Memory

SNMP Trap ID
41

CIM Information
Prefix: PLAT **ID:** 0127

User Response
No action; information only.

- **816f070c-200affff : Configuration error for [PhysicalMemoryElementName] on Subsystem [MemoryElementName]has deasserted. (DIMM 10)**

  This message is for the use case when an implementation has detected a Memory DIMM configuration error has deasserted.

  May also be shown as 816f070c200affff or 0x816f070c200affff

  Severity
  Info

  Serviceable
  No

  Automatically notify support
  No

  Alert Category
  Critical - Memory

  SNMP Trap ID
  41

  CIM Information
  Prefix: PLAT **ID:** 0127

  User Response
  No action; information only.

- **816f070c-200bffff : Configuration error for [PhysicalMemoryElementName] on Subsystem [MemoryElementName]has deasserted. (DIMM 11)**

  This message is for the use case when an implementation has detected a Memory DIMM configuration error has deasserted.

  May also be shown as 816f070c200bffff or 0x816f070c200bffff

  Severity
  Info

  Serviceable
  No

  Automatically notify support
  No

  Alert Category

Critical - Memory

SNMP Trap ID
41

CIM Information
Prefix: PLAT **ID:** 0127

User Response
No action; information only.

- **816f070c-200cffff : Configuration error for [PhysicalMemoryElementName] on Subsystem [MemoryElementName]has deasserted. (DIMM 12)**

  This message is for the use case when an implementation has detected a Memory DIMM configuration error has deasserted.

  May also be shown as 816f070c200cffff or 0x816f070c200cffff

  Severity
  Info

  Serviceable
  No

  Automatically notify support
  No

  Alert Category
  Critical - Memory

  SNMP Trap ID
  41

  CIM Information
  Prefix: PLAT **ID:** 0127

  User Response
  No action; information only.

- **816f070c-200dffff : Configuration error for [PhysicalMemoryElementName] on Subsystem [MemoryElementName]has deasserted. (DIMM 13)**

  This message is for the use case when an implementation has detected a Memory DIMM configuration error has deasserted.

  May also be shown as 816f070c200dffff or 0x816f070c200dffff

  Severity
  Info

  Serviceable
  No

  Automatically notify support
  No

  Alert Category
  Critical - Memory

  SNMP Trap ID
  41

  CIM Information

Prefix: PLAT **ID:** 0127

User Response
No action; information only.

- **816f070c-200effff : Configuration error for [PhysicalMemoryElementName] on Subsystem [MemoryElementName]has deasserted. (DIMM 14)**

  This message is for the use case when an implementation has detected a Memory DIMM configuration error has deasserted.

  May also be shown as 816f070c200effff or 0x816f070c200effff

  Severity
  Info

  Serviceable
  No

  Automatically notify support
  No

  Alert Category
  Critical - Memory

  SNMP Trap ID
  41

  CIM Information
  Prefix: PLAT **ID:** 0127

  User Response
  No action; information only.

- **816f070c-200fffff : Configuration error for [PhysicalMemoryElementName] on Subsystem [MemoryElementName]has deasserted. (DIMM 15)**

  This message is for the use case when an implementation has detected a Memory DIMM configuration error has deasserted.

  May also be shown as 816f070c200fffff or 0x816f070c200fffff

  Severity
  Info

  Serviceable
  No

  Automatically notify support
  No

  Alert Category
  Critical - Memory

  SNMP Trap ID
  41

  CIM Information
  Prefix: PLAT **ID:** 0127

  User Response
  No action; information only.

- **816f070c-2010ffff : Configuration error for [PhysicalMemoryElementName] on Subsystem [MemoryElementName]has deasserted. (DIMM 16)**

  This message is for the use case when an implementation has detected a Memory DIMM configuration error has deasserted.

  May also be shown as 816f070c2010ffff or 0x816f070c2010ffff

  Severity
  Info

  Serviceable
  No

  Automatically notify support
  No

  Alert Category
  Critical - Memory

  SNMP Trap ID
  41

  CIM Information
  Prefix: PLAT **ID:** 0127

  User Response
  No action; information only.

- **816f070c-2011ffff : Configuration error for [PhysicalMemoryElementName] on Subsystem [MemoryElementName]has deasserted. (DIMM 17)**

  This message is for the use case when an implementation has detected a Memory DIMM configuration error has deasserted.

  May also be shown as 816f070c2011ffff or 0x816f070c2011ffff

  Severity
  Info

  Serviceable
  No

  Automatically notify support
  No

  Alert Category
  Critical - Memory

  SNMP Trap ID
  41

  CIM Information
  Prefix: PLAT **ID:** 0127

  User Response
  No action; information only.

- **816f070c-2012ffff : Configuration error for [PhysicalMemoryElementName] on Subsystem [MemoryElementName]has deasserted. (DIMM 18)**

  This message is for the use case when an implementation has detected a Memory DIMM configuration error has deasserted.

May also be shown as 816f070c2012ffff or 0x816f070c2012ffff

Severity
Info

Serviceable
No

Automatically notify support
No

Alert Category
Critical - Memory

SNMP Trap ID
41

CIM Information
Prefix: PLAT **ID:** 0127

User Response
No action; information only.

- **816f070c-2013ffff : Configuration error for [PhysicalMemoryElementName] on Subsystem [MemoryElementName]has deasserted. (DIMM 19)**

  This message is for the use case when an implementation has detected a Memory DIMM configuration error has deasserted.

  May also be shown as 816f070c2013ffff or 0x816f070c2013ffff

  Severity
  Info

  Serviceable
  No

  Automatically notify support
  No

  Alert Category
  Critical - Memory

  SNMP Trap ID
  41

  CIM Information
  Prefix: PLAT **ID:** 0127

  User Response
  No action; information only.

- **816f070c-2014ffff : Configuration error for [PhysicalMemoryElementName] on Subsystem [MemoryElementName]has deasserted. (DIMM 20)**

  This message is for the use case when an implementation has detected a Memory DIMM configuration error has deasserted.

  May also be shown as 816f070c2014ffff or 0x816f070c2014ffff

  Severity
  Info

  Serviceable

No

Automatically notify support
No

Alert Category
Critical - Memory

SNMP Trap ID
41

CIM Information
Prefix: PLAT **ID:** 0127

User Response
No action; information only.

- **816f070c-2015ffff : Configuration error for [PhysicalMemoryElementName] on Subsystem [MemoryElementName]has deasserted. (DIMM 21)**

  This message is for the use case when an implementation has detected a Memory DIMM configuration error has deasserted.

  May also be shown as 816f070c2015ffff or 0x816f070c2015ffff

  Severity
  Info

  Serviceable
  No

  Automatically notify support
  No

  Alert Category
  Critical - Memory

  SNMP Trap ID
  41

  CIM Information
  Prefix: PLAT **ID:** 0127

  User Response
  No action; information only.

- **816f070c-2016ffff : Configuration error for [PhysicalMemoryElementName] on Subsystem [MemoryElementName]has deasserted. (DIMM 22)**

  This message is for the use case when an implementation has detected a Memory DIMM configuration error has deasserted.

  May also be shown as 816f070c2016ffff or 0x816f070c2016ffff

  Severity
  Info

  Serviceable
  No

  Automatically notify support
  No

  Alert Category

Critical - Memory

SNMP Trap ID
41

CIM Information
Prefix: PLAT **ID:** 0127

User Response
No action; information only.

- **816f070c-2017ffff : Configuration error for [PhysicalMemoryElementName] on Subsystem [MemoryElementName]has deasserted. (DIMM 23)**

  This message is for the use case when an implementation has detected a Memory DIMM configuration error has deasserted.

  May also be shown as 816f070c2017ffff or 0x816f070c2017ffff

  Severity
  Info

  Serviceable
  No

  Automatically notify support
  No

  Alert Category
  Critical - Memory

  SNMP Trap ID
  41

  CIM Information
  Prefix: PLAT **ID:** 0127

  User Response
  No action; information only.

- **816f070c-2018ffff : Configuration error for [PhysicalMemoryElementName] on Subsystem [MemoryElementName]has deasserted. (DIMM 24)**

  This message is for the use case when an implementation has detected a Memory DIMM configuration error has deasserted.

  May also be shown as 816f070c2018ffff or 0x816f070c2018ffff

  Severity
  Info

  Serviceable
  No

  Automatically notify support
  No

  Alert Category
  Critical - Memory

  SNMP Trap ID
  41

  CIM Information

Prefix: PLAT **ID:** 0127

User Response
No action; information only.

- **816f070c-2581ffff : Configuration error for [PhysicalMemoryElementName] on Subsystem [MemoryElementName]has deasserted. (All DIMMS)**

This message is for the use case when an implementation has detected a Memory DIMM configuration error has deasserted.

May also be shown as 816f070c2581ffff or 0x816f070c2581ffff

Severity
Info

Serviceable
No

Automatically notify support
No

Alert Category
Critical - Memory

SNMP Trap ID
41

CIM Information
Prefix: PLAT **ID:** 0127

User Response
No action; information only. One of the DIMMs :

- **816f070d-0400ffff : Rebuild completed for Array in system [ComputerSystemElementName]. (Drive 0)**

This message is for the use case when an implementation has detected that an Array Rebuild has Completed.

May also be shown as 816f070d0400ffff or 0x816f070d0400ffff

Severity
Info

Serviceable
No

Automatically notify support
No

Alert Category
System - Other

SNMP Trap ID

CIM Information
Prefix: PLAT **ID:** 0179

User Response
No action; information only.

- **816f070d-0401ffff : Rebuild completed for Array in system [ComputerSystemElementName]. (Drive 1)**

  This message is for the use case when an implementation has detected that an Array Rebuild has Completed.

  May also be shown as 816f070d0401ffff or 0x816f070d0401ffff

  Severity
  Info

  Serviceable
  No

  Automatically notify support
  No

  Alert Category
  System - Other

  SNMP Trap ID

  CIM Information
  Prefix: PLAT **ID:** 0179

  User Response
  No action; information only.

- **816f070d-0402ffff : Rebuild completed for Array in system [ComputerSystemElementName]. (Drive 2)**

  This message is for the use case when an implementation has detected that an Array Rebuild has Completed.

  May also be shown as 816f070d0402ffff or 0x816f070d0402ffff

  Severity
  Info

  Serviceable
  No

  Automatically notify support
  No

  Alert Category
  System - Other

  SNMP Trap ID

  CIM Information
  Prefix: PLAT **ID:** 0179

  User Response
  No action; information only.

- **816f070d-0403ffff : Rebuild completed for Array in system [ComputerSystemElementName]. (Drive 3)**

  This message is for the use case when an implementation has detected that an Array Rebuild has Completed.

May also be shown as 816f070d0403ffff or 0x816f070d0403ffff

Severity
Info

Serviceable
No

Automatically notify support
No

Alert Category
System - Other

SNMP Trap ID

CIM Information
Prefix: PLAT **ID:** 0179

User Response
No action; information only.

- **816f070d-0404ffff : Rebuild completed for Array in system [ComputerSystemElementName]. (Drive 4)**

This message is for the use case when an implementation has detected that an Array Rebuild has Completed.

May also be shown as 816f070d0404ffff or 0x816f070d0404ffff

Severity
Info

Serviceable
No

Automatically notify support
No

Alert Category
System - Other

SNMP Trap ID

CIM Information
Prefix: PLAT **ID:** 0179

User Response
No action; information only.

- **816f070d-0405ffff : Rebuild completed for Array in system [ComputerSystemElementName]. (Drive 5)**

This message is for the use case when an implementation has detected that an Array Rebuild has Completed.

May also be shown as 816f070d0405ffff or 0x816f070d0405ffff

Severity
Info

Serviceable

No

Automatically notify support
No

Alert Category
System - Other

SNMP Trap ID

CIM Information
Prefix: PLAT **ID:** 0179

User Response
No action; information only.

- **816f070d-0406ffff : Rebuild completed for Array in system [ComputerSystemElementName]. (Drive 6)**

  This message is for the use case when an implementation has detected that an Array Rebuild has Completed.

  May also be shown as 816f070d0406ffff or 0x816f070d0406ffff

  Severity
  Info

  Serviceable
  No

  Automatically notify support
  No

  Alert Category
  System - Other

  SNMP Trap ID

  CIM Information
  Prefix: PLAT **ID:** 0179

  User Response
  No action; information only.

- **816f070d-0407ffff : Rebuild completed for Array in system [ComputerSystemElementName]. (Drive 7)**

  This message is for the use case when an implementation has detected that an Array Rebuild has Completed.

  May also be shown as 816f070d0407ffff or 0x816f070d0407ffff

  Severity
  Info

  Serviceable
  No

  Automatically notify support
  No

  Alert Category

System - Other

SNMP Trap ID

CIM Information
Prefix: PLAT **ID:** 0179

User Response
No action; information only.

- **816f070d-0408ffff : Rebuild completed for Array in system [ComputerSystemElementName]. (Drive 8)**

This message is for the use case when an implementation has detected that an Array Rebuild has Completed.

May also be shown as 816f070d0408ffff or 0x816f070d0408ffff

Severity
Info

Serviceable
No

Automatically notify support
No

Alert Category
System - Other

SNMP Trap ID

CIM Information
Prefix: PLAT **ID:** 0179

User Response
No action; information only.

- **816f070d-0409ffff : Rebuild completed for Array in system [ComputerSystemElementName]. (Drive 9)**

This message is for the use case when an implementation has detected that an Array Rebuild has Completed.

May also be shown as 816f070d0409ffff or 0x816f070d0409ffff

Severity
Info

Serviceable
No

Automatically notify support
No

Alert Category
System - Other

SNMP Trap ID

CIM Information

Prefix: PLAT **ID:** 0179

User Response
No action; information only.

- **816f070d-040affff : Rebuild completed for Array in system [ComputerSystemElementName]. (Drive 10)**

This message is for the use case when an implementation has detected that an Array Rebuild has Completed.

May also be shown as 816f070d040affff or 0x816f070d040affff

Severity
Info

Serviceable
No

Automatically notify support
No

Alert Category
System - Other

SNMP Trap ID

CIM Information
Prefix: PLAT **ID:** 0179

User Response
No action; information only.

- **816f070d-040bffff : Rebuild completed for Array in system [ComputerSystemElementName]. (Drive 11)**

This message is for the use case when an implementation has detected that an Array Rebuild has Completed.

May also be shown as 816f070d040bffff or 0x816f070d040bffff

Severity
Info

Serviceable
No

Automatically notify support
No

Alert Category
System - Other

SNMP Trap ID

CIM Information
Prefix: PLAT **ID:** 0179

User Response
No action; information only.

- **816f070d-040cffff : Rebuild completed for Array in system [ComputerSystemElementName]. (Drive 12)**

  This message is for the use case when an implementation has detected that an Array Rebuild has Completed.

  May also be shown as 816f070d040cffff or 0x816f070d040cffff

  Severity
  Info

  Serviceable
  No

  Automatically notify support
  No

  Alert Category
  System - Other

  SNMP Trap ID

  CIM Information
  Prefix: PLAT **ID:** 0179

  User Response
  No action; information only.

- **816f070d-040dffff : Rebuild completed for Array in system [ComputerSystemElementName]. (Drive 13)**

  This message is for the use case when an implementation has detected that an Array Rebuild has Completed.

  May also be shown as 816f070d040dffff or 0x816f070d040dffff

  Severity
  Info

  Serviceable
  No

  Automatically notify support
  No

  Alert Category
  System - Other

  SNMP Trap ID

  CIM Information
  Prefix: PLAT **ID:** 0179

  User Response
  No action; information only.

- **816f070d-0410ffff : Rebuild completed for Array in system [ComputerSystemElementName]. (Ext Drive)**

  This message is for the use case when an implementation has detected that an Array Rebuild has Completed.

May also be shown as 816f070d0410ffff or 0x816f070d0410ffff

Severity
Info

Serviceable
No

Automatically notify support
No

Alert Category
System - Other

SNMP Trap ID

CIM Information
Prefix: PLAT **ID:** 0179

User Response
No action; information only.

- **816f0807-0301ffff : [ProcessorElementName] has been Enabled. (CPU 1)**

  This message is for the use case when an implementation has detected a Processor has been Enabled.

  May also be shown as 816f08070301ffff or 0x816f08070301ffff

  Severity
  Info

  Serviceable
  No

  Automatically notify support
  No

  Alert Category
  System - Other

  SNMP Trap ID

  CIM Information
  Prefix: PLAT **ID:** 0060

  User Response
  No action; information only.

- **816f0807-0302ffff : [ProcessorElementName] has been Enabled. (CPU 2)**

  This message is for the use case when an implementation has detected a Processor has been Enabled.

  May also be shown as 816f08070302ffff or 0x816f08070302ffff

  Severity
  Info

  Serviceable
  No

  Automatically notify support
  No

Alert Category
System - Other

SNMP Trap ID

CIM Information
Prefix: PLAT **ID:** 0060

User Response
No action; information only.

- **816f0807-2584ffff : [ProcessorElementName] has been Enabled. (All CPUs)**

This message is for the use case when an implementation has detected a Processor has been Enabled.

May also be shown as 816f08072584ffff or 0x816f08072584ffff

Severity
Info

Serviceable
No

Automatically notify support
No

Alert Category
System - Other

SNMP Trap ID

CIM Information
Prefix: PLAT **ID:** 0060

User Response
No action; information only. One of the CPUs :

- **816f0813-2581ffff : System [ComputerSystemElementName] has recovered from an Uncorrectable Bus Error. (DIMMs)**

This message is for the use case when an implementation has detected that a system has recovered from a Bus Uncorrectable Error.

May also be shown as 816f08132581ffff or 0x816f08132581ffff

Severity
Info

Serviceable
No

Automatically notify support
No

Alert Category
Critical - Other

SNMP Trap ID
50

CIM Information
Prefix: PLAT **ID:** 0241

User Response
No action; information only.

- **816f0813-2582ffff : System [ComputerSystemElementName] has recovered from an Uncorrectable Bus Error. (PCIs)**

  This message is for the use case when an implementation has detected that a system has recovered from a Bus Uncorrectable Error.

  May also be shown as 816f08132582ffff or 0x816f08132582ffff

  Severity
  Info

  Serviceable
  No

  Automatically notify support
  No

  Alert Category
  Critical - Other

  SNMP Trap ID
  50

  CIM Information
  Prefix: PLAT **ID:** 0241

  User Response
  No action; information only.

- **816f0813-2584ffff : System [ComputerSystemElementName] has recovered from an Uncorrectable Bus Error. (CPUs)**

  This message is for the use case when an implementation has detected that a system has recovered from a Bus Uncorrectable Error.

  May also be shown as 816f08132584ffff or 0x816f08132584ffff

  Severity
  Info

  Serviceable
  No

  Automatically notify support
  No

  Alert Category
  Critical - Other

  SNMP Trap ID
  50

  CIM Information
  Prefix: PLAT **ID:** 0241

  User Response
  No action; information only.

- **816f090c-2001ffff : [PhysicalMemoryElementName] on Subsystem [MemoryElementName] is no longer Throttled. (DIMM 1)**

This message is for the use case when an implementation has detected Memory is no longer Throttled.

May also be shown as 816f090c2001ffff or 0x816f090c2001ffff

Severity
Info

Serviceable
No

Automatically notify support
No

Alert Category
System - Other

SNMP Trap ID

CIM Information
Prefix: PLAT **ID:** 0143

User Response
No action; information only.

- **816f090c-2002ffff : [PhysicalMemoryElementName] on Subsystem [MemoryElementName] is no longer Throttled. (DIMM 2)**

This message is for the use case when an implementation has detected Memory is no longer Throttled.

May also be shown as 816f090c2002ffff or 0x816f090c2002ffff

Severity
Info

Serviceable
No

Automatically notify support
No

Alert Category
System - Other

SNMP Trap ID

CIM Information
Prefix: PLAT **ID:** 0143

User Response
No action; information only.

- **816f090c-2003ffff : [PhysicalMemoryElementName] on Subsystem [MemoryElementName] is no longer Throttled. (DIMM 3)**

This message is for the use case when an implementation has detected Memory is no longer Throttled.

May also be shown as 816f090c2003ffff or 0x816f090c2003ffff

Severity
Info

Serviceable

No

Automatically notify support
No

Alert Category
System - Other

SNMP Trap ID

CIM Information
Prefix: PLAT **ID:** 0143

User Response
No action; information only.

- **816f090c-2004ffff : [PhysicalMemoryElementName] on Subsystem [MemoryElementName] is no longer Throttled. (DIMM 4)**

  This message is for the use case when an implementation has detected Memory is no longer Throttled.

  May also be shown as 816f090c2004ffff or 0x816f090c2004ffff

  Severity
  Info

  Serviceable
  No

  Automatically notify support
  No

  Alert Category
  System - Other

  SNMP Trap ID

  CIM Information
  Prefix: PLAT **ID:** 0143

  User Response
  No action; information only.

- **816f090c-2005ffff : [PhysicalMemoryElementName] on Subsystem [MemoryElementName] is no longer Throttled. (DIMM 5)**

  This message is for the use case when an implementation has detected Memory is no longer Throttled.

  May also be shown as 816f090c2005ffff or 0x816f090c2005ffff

  Severity
  Info

  Serviceable
  No

  Automatically notify support
  No

  Alert Category
  System - Other

  SNMP Trap ID

CIM Information
Prefix: PLAT **ID:** 0143

User Response
No action; information only.

- **816f090c-2006ffff : [PhysicalMemoryElementName] on Subsystem [MemoryElementName] is no longer Throttled. (DIMM 6)**

This message is for the use case when an implementation has detected Memory is no longer Throttled.

May also be shown as 816f090c2006ffff or 0x816f090c2006ffff

Severity
Info

Serviceable
No

Automatically notify support
No

Alert Category
System - Other

SNMP Trap ID

CIM Information
Prefix: PLAT **ID:** 0143

User Response
No action; information only.

- **816f090c-2007ffff : [PhysicalMemoryElementName] on Subsystem [MemoryElementName] is no longer Throttled. (DIMM 7)**

This message is for the use case when an implementation has detected Memory is no longer Throttled.

May also be shown as 816f090c2007ffff or 0x816f090c2007ffff

Severity
Info

Serviceable
No

Automatically notify support
No

Alert Category
System - Other

SNMP Trap ID

CIM Information
Prefix: PLAT **ID:** 0143

User Response
No action; information only.

- **816f090c-2008ffff : [PhysicalMemoryElementName] on Subsystem [MemoryElementName] is no longer Throttled. (DIMM 8)**

  This message is for the use case when an implementation has detected Memory is no longer Throttled.

  May also be shown as 816f090c2008ffff or 0x816f090c2008ffff

  Severity
  Info

  Serviceable
  No

  Automatically notify support
  No

  Alert Category
  System - Other

  SNMP Trap ID

  CIM Information
  Prefix: PLAT **ID:** 0143

  User Response
  No action; information only.

- **816f090c-2009ffff : [PhysicalMemoryElementName] on Subsystem [MemoryElementName] is no longer Throttled. (DIMM 9)**

  This message is for the use case when an implementation has detected Memory is no longer Throttled.

  May also be shown as 816f090c2009ffff or 0x816f090c2009ffff

  Severity
  Info

  Serviceable
  No

  Automatically notify support
  No

  Alert Category
  System - Other

  SNMP Trap ID

  CIM Information
  Prefix: PLAT **ID:** 0143

  User Response
  No action; information only.

- **816f090c-200affff : [PhysicalMemoryElementName] on Subsystem [MemoryElementName] is no longer Throttled. (DIMM 10)**

  This message is for the use case when an implementation has detected Memory is no longer Throttled.

  May also be shown as 816f090c200affff or 0x816f090c200affff

  Severity

Info

Serviceable
No

Automatically notify support
No

Alert Category
System - Other

SNMP Trap ID

CIM Information
Prefix: PLAT **ID:** 0143

User Response
No action; information only.

- **816f090c-200bffff : [PhysicalMemoryElementName] on Subsystem [MemoryElementName] is no longer Throttled. (DIMM 11)**

  This message is for the use case when an implementation has detected Memory is no longer Throttled.

  May also be shown as 816f090c200bffff or 0x816f090c200bffff

  Severity
  Info

  Serviceable
  No

  Automatically notify support
  No

  Alert Category
  System - Other

  SNMP Trap ID

  CIM Information
  Prefix: PLAT **ID:** 0143

  User Response
  No action; information only.

- **816f090c-200cffff : [PhysicalMemoryElementName] on Subsystem [MemoryElementName] is no longer Throttled. (DIMM 12)**

  This message is for the use case when an implementation has detected Memory is no longer Throttled.

  May also be shown as 816f090c200cffff or 0x816f090c200cffff

  Severity
  Info

  Serviceable
  No

  Automatically notify support
  No

  Alert Category

System - Other

SNMP Trap ID

CIM Information
Prefix: PLAT **ID:** 0143

User Response
No action; information only.

- **816f090c-200dffff : [PhysicalMemoryElementName] on Subsystem [MemoryElementName] is no longer Throttled. (DIMM 13)**

  This message is for the use case when an implementation has detected Memory is no longer Throttled.

  May also be shown as 816f090c200dffff or 0x816f090c200dffff

  Severity
  Info

  Serviceable
  No

  Automatically notify support
  No

  Alert Category
  System - Other

  SNMP Trap ID

  CIM Information
  Prefix: PLAT **ID:** 0143

  User Response
  No action; information only.

- **816f090c-200effff : [PhysicalMemoryElementName] on Subsystem [MemoryElementName] is no longer Throttled. (DIMM 14)**

  This message is for the use case when an implementation has detected Memory is no longer Throttled.

  May also be shown as 816f090c200effff or 0x816f090c200effff

  Severity
  Info

  Serviceable
  No

  Automatically notify support
  No

  Alert Category
  System - Other

  SNMP Trap ID

  CIM Information
  Prefix: PLAT **ID:** 0143

  User Response

No action; information only.

- **816f090c-200fffff : [PhysicalMemoryElementName] on Subsystem [MemoryElementName] is no longer Throttled. (DIMM 15)**

  This message is for the use case when an implementation has detected Memory is no longer Throttled.

  May also be shown as 816f090c200fffff or 0x816f090c200fffff

  Severity
  Info

  Serviceable
  No

  Automatically notify support
  No

  Alert Category
  System - Other

  SNMP Trap ID

  CIM Information
  Prefix: PLAT **ID:** 0143

  User Response
  No action; information only.

- **816f090c-2010ffff : [PhysicalMemoryElementName] on Subsystem [MemoryElementName] is no longer Throttled. (DIMM 16)**

  This message is for the use case when an implementation has detected Memory is no longer Throttled.

  May also be shown as 816f090c2010ffff or 0x816f090c2010ffff

  Severity
  Info

  Serviceable
  No

  Automatically notify support
  No

  Alert Category
  System - Other

  SNMP Trap ID

  CIM Information
  Prefix: PLAT **ID:** 0143

  User Response
  No action; information only.

- **816f090c-2011ffff : [PhysicalMemoryElementName] on Subsystem [MemoryElementName] is no longer Throttled. (DIMM 17)**

  This message is for the use case when an implementation has detected Memory is no longer Throttled.

  May also be shown as 816f090c2011ffff or 0x816f090c2011ffff

Severity
Info

Serviceable
No

Automatically notify support
No

Alert Category
System - Other

SNMP Trap ID

CIM Information
Prefix: PLAT **ID:** 0143

User Response
No action; information only.

- **816f090c-2012ffff : [PhysicalMemoryElementName] on Subsystem [MemoryElementName] is no longer Throttled. (DIMM 18)**

  This message is for the use case when an implementation has detected Memory is no longer Throttled.

  May also be shown as 816f090c2012ffff or 0x816f090c2012ffff

  Severity
  Info

  Serviceable
  No

  Automatically notify support
  No

  Alert Category
  System - Other

  SNMP Trap ID

  CIM Information
  Prefix: PLAT **ID:** 0143

  User Response
  No action; information only.

- **816f090c-2013ffff : [PhysicalMemoryElementName] on Subsystem [MemoryElementName] is no longer Throttled. (DIMM 19)**

  This message is for the use case when an implementation has detected Memory is no longer Throttled.

  May also be shown as 816f090c2013ffff or 0x816f090c2013ffff

  Severity
  Info

  Serviceable
  No

  Automatically notify support
  No

Alert Category
System - Other

SNMP Trap ID

CIM Information
Prefix: PLAT **ID:** 0143

User Response
No action; information only.

- **816f090c-2014ffff : [PhysicalMemoryElementName] on Subsystem [MemoryElementName] is no longer Throttled. (DIMM 20)**

This message is for the use case when an implementation has detected Memory is no longer Throttled.

May also be shown as 816f090c2014ffff or 0x816f090c2014ffff

Severity
Info

Serviceable
No

Automatically notify support
No

Alert Category
System - Other

SNMP Trap ID

CIM Information
Prefix: PLAT **ID:** 0143

User Response
No action; information only.

- **816f090c-2015ffff : [PhysicalMemoryElementName] on Subsystem [MemoryElementName] is no longer Throttled. (DIMM 21)**

This message is for the use case when an implementation has detected Memory is no longer Throttled.

May also be shown as 816f090c2015ffff or 0x816f090c2015ffff

Severity
Info

Serviceable
No

Automatically notify support
No

Alert Category
System - Other

SNMP Trap ID

CIM Information
Prefix: PLAT **ID:** 0143

User Response
No action; information only.

- **816f090c-2016ffff : [PhysicalMemoryElementName] on Subsystem [MemoryElementName] is no longer Throttled. (DIMM 22)**

  This message is for the use case when an implementation has detected Memory is no longer Throttled.

  May also be shown as 816f090c2016ffff or 0x816f090c2016ffff

  Severity
  Info

  Serviceable
  No

  Automatically notify support
  No

  Alert Category
  System - Other

  SNMP Trap ID

  CIM Information
  Prefix: PLAT **ID:** 0143

  User Response
  No action; information only.

- **816f090c-2017ffff : [PhysicalMemoryElementName] on Subsystem [MemoryElementName] is no longer Throttled. (DIMM 23)**

  This message is for the use case when an implementation has detected Memory is no longer Throttled.

  May also be shown as 816f090c2017ffff or 0x816f090c2017ffff

  Severity
  Info

  Serviceable
  No

  Automatically notify support
  No

  Alert Category
  System - Other

  SNMP Trap ID

  CIM Information
  Prefix: PLAT **ID:** 0143

  User Response
  No action; information only.

- **816f090c-2018ffff : [PhysicalMemoryElementName] on Subsystem [MemoryElementName] is no longer Throttled. (DIMM 24)**

  This message is for the use case when an implementation has detected Memory is no longer Throttled.

May also be shown as 816f090c2018ffff or 0x816f090c2018ffff

Severity
Info

Serviceable
No

Automatically notify support
No

Alert Category
System - Other

SNMP Trap ID

CIM Information
Prefix: PLAT **ID:** 0143

User Response
No action; information only.

- **816f0a07-0301ffff : The Processor [ProcessorElementName] is no longer operating in a Degraded State. (CPU 1)**

  This message is for the use case when an implementation has detected a Processor is no longer running in the Degraded state.

  May also be shown as 816f0a070301ffff or 0x816f0a070301ffff

  Severity
  Info

  Serviceable
  No

  Automatically notify support
  No

  Alert Category
  Warning - CPU

  SNMP Trap ID
  42

  CIM Information
  Prefix: PLAT **ID:** 0039

  User Response
  No action; information only.

- **816f0a07-0302ffff : The Processor [ProcessorElementName] is no longer operating in a Degraded State. (CPU 2)**

  This message is for the use case when an implementation has detected a Processor is no longer running in the Degraded state.

  May also be shown as 816f0a070302ffff or 0x816f0a070302ffff

  Severity
  Info

  Serviceable

No

Automatically notify support
No

Alert Category
Warning - CPU

SNMP Trap ID
42

CIM Information
Prefix: PLAT **ID:** 0039

User Response
No action; information only.

- **816f0a0c-2001ffff : An Over-Temperature Condition has been removed on the [PhysicalMemoryElementName] on Subsystem [MemoryElementName]. (DIMM 1)**

  This message is for the use case when an implementation has detected an Over Temperature Condition for Memory that has been Removed.

  May also be shown as 816f0a0c2001ffff or 0x816f0a0c2001ffff

  Severity
  Info

  Serviceable
  No

  Automatically notify support
  No

  Alert Category
  Critical - Temperature

  SNMP Trap ID
  0

  CIM Information
  Prefix: PLAT **ID:** 0147

  User Response
  No action; information only.

- **816f0a0c-2002ffff : An Over-Temperature Condition has been removed on the [PhysicalMemoryElementName] on Subsystem [MemoryElementName]. (DIMM 2)**

  This message is for the use case when an implementation has detected an Over Temperature Condition for Memory that has been Removed.

  May also be shown as 816f0a0c2002ffff or 0x816f0a0c2002ffff

  Severity
  Info

  Serviceable
  No

  Automatically notify support
  No

  Alert Category

Critical - Temperature

SNMP Trap ID
0

CIM Information
Prefix: PLAT **ID:** 0147

User Response
No action; information only.

- **816f0a0c-2003ffff : An Over-Temperature Condition has been removed on the [PhysicalMemoryElementName] on Subsystem [MemoryElementName]. (DIMM 3)**

  This message is for the use case when an implementation has detected an Over Temperature Condition for Memory that has been Removed.

  May also be shown as 816f0a0c2003ffff or 0x816f0a0c2003ffff

  Severity
  Info

  Serviceable
  No

  Automatically notify support
  No

  Alert Category
  Critical - Temperature

  SNMP Trap ID
  0

  CIM Information
  Prefix: PLAT **ID:** 0147

  User Response
  No action; information only.

- **816f0a0c-2004ffff : An Over-Temperature Condition has been removed on the [PhysicalMemoryElementName] on Subsystem [MemoryElementName]. (DIMM 4)**

  This message is for the use case when an implementation has detected an Over Temperature Condition for Memory that has been Removed.

  May also be shown as 816f0a0c2004ffff or 0x816f0a0c2004ffff

  Severity
  Info

  Serviceable
  No

  Automatically notify support
  No

  Alert Category
  Critical - Temperature

  SNMP Trap ID
  0

  CIM Information

Prefix: PLAT **ID:** 0147

User Response
No action; information only.

- **816f0a0c-2005ffff : An Over-Temperature Condition has been removed on the [PhysicalMemoryElementName] on Subsystem [MemoryElementName]. (DIMM 5)**

  This message is for the use case when an implementation has detected an Over Temperature Condition for Memory that has been Removed.

  May also be shown as 816f0a0c2005ffff or 0x816f0a0c2005ffff

  Severity
  Info

  Serviceable
  No

  Automatically notify support
  No

  Alert Category
  Critical - Temperature

  SNMP Trap ID
  0

  CIM Information
  Prefix: PLAT **ID:** 0147

  User Response
  No action; information only.

- **816f0a0c-2006ffff : An Over-Temperature Condition has been removed on the [PhysicalMemoryElementName] on Subsystem [MemoryElementName]. (DIMM 6)**

  This message is for the use case when an implementation has detected an Over Temperature Condition for Memory that has been Removed.

  May also be shown as 816f0a0c2006ffff or 0x816f0a0c2006ffff

  Severity
  Info

  Serviceable
  No

  Automatically notify support
  No

  Alert Category
  Critical - Temperature

  SNMP Trap ID
  0

  CIM Information
  Prefix: PLAT **ID:** 0147

  User Response
  No action; information only.

- **816f0a0c-2007ffff : An Over-Temperature Condition has been removed on the [PhysicalMemoryElementName] on Subsystem [MemoryElementName]. (DIMM 7)**

  This message is for the use case when an implementation has detected an Over Temperature Condition for Memory that has been Removed.

  May also be shown as 816f0a0c2007ffff or 0x816f0a0c2007ffff

  Severity
  Info

  Serviceable
  No

  Automatically notify support
  No

  Alert Category
  Critical - Temperature

  SNMP Trap ID
  0

  CIM Information
  Prefix: PLAT **ID:** 0147

  User Response
  No action; information only.

- **816f0a0c-2008ffff : An Over-Temperature Condition has been removed on the [PhysicalMemoryElementName] on Subsystem [MemoryElementName]. (DIMM 8)**

  This message is for the use case when an implementation has detected an Over Temperature Condition for Memory that has been Removed.

  May also be shown as 816f0a0c2008ffff or 0x816f0a0c2008ffff

  Severity
  Info

  Serviceable
  No

  Automatically notify support
  No

  Alert Category
  Critical - Temperature

  SNMP Trap ID
  0

  CIM Information
  Prefix: PLAT **ID:** 0147

  User Response
  No action; information only.

- **816f0a0c-2009ffff : An Over-Temperature Condition has been removed on the [PhysicalMemoryElementName] on Subsystem [MemoryElementName]. (DIMM 9)**

  This message is for the use case when an implementation has detected an Over Temperature Condition for Memory that has been Removed.

May also be shown as 816f0a0c2009ffff or 0x816f0a0c2009ffff

Severity
Info

Serviceable
No

Automatically notify support
No

Alert Category
Critical - Temperature

SNMP Trap ID
0

CIM Information
Prefix: PLAT **ID:** 0147

User Response
No action; information only.

- **816f0a0c-200affff : An Over-Temperature Condition has been removed on the [PhysicalMemoryElementName] on Subsystem [MemoryElementName]. (DIMM 10)**

  This message is for the use case when an implementation has detected an Over Temperature Condition for Memory that has been Removed.

  May also be shown as 816f0a0c200affff or 0x816f0a0c200affff

  Severity
  Info

  Serviceable
  No

  Automatically notify support
  No

  Alert Category
  Critical - Temperature

  SNMP Trap ID
  0

  CIM Information
  Prefix: PLAT **ID:** 0147

  User Response
  No action; information only.

- **816f0a0c-200bffff : An Over-Temperature Condition has been removed on the [PhysicalMemoryElementName] on Subsystem [MemoryElementName]. (DIMM 11)**

  This message is for the use case when an implementation has detected an Over Temperature Condition for Memory that has been Removed.

  May also be shown as 816f0a0c200bffff or 0x816f0a0c200bffff

  Severity
  Info

  Serviceable

No

Automatically notify support
No

Alert Category
Critical - Temperature

SNMP Trap ID
0

CIM Information
Prefix: PLAT **ID:** 0147

User Response
No action; information only.

- **816f0a0c-200cffff : An Over-Temperature Condition has been removed on the [PhysicalMemoryElementName] on Subsystem [MemoryElementName]. (DIMM 12)**

  This message is for the use case when an implementation has detected an Over Temperature Condition for Memory that has been Removed.

  May also be shown as 816f0a0c200cffff or 0x816f0a0c200cffff

  Severity
  Info

  Serviceable
  No

  Automatically notify support
  No

  Alert Category
  Critical - Temperature

  SNMP Trap ID
  0

  CIM Information
  Prefix: PLAT **ID:** 0147

  User Response
  No action; information only.

- **816f0a0c-200dffff : An Over-Temperature Condition has been removed on the [PhysicalMemoryElementName] on Subsystem [MemoryElementName]. (DIMM 13)**

  This message is for the use case when an implementation has detected an Over Temperature Condition for Memory that has been Removed.

  May also be shown as 816f0a0c200dffff or 0x816f0a0c200dffff

  Severity
  Info

  Serviceable
  No

  Automatically notify support
  No

  Alert Category

Critical - Temperature

SNMP Trap ID
0

CIM Information
Prefix: PLAT **ID:** 0147

User Response
No action; information only.

- **816f0a0c-200effff : An Over-Temperature Condition has been removed on the [PhysicalMemoryElementName] on Subsystem [MemoryElementName]. (DIMM 14)**

  This message is for the use case when an implementation has detected an Over Temperature Condition for Memory that has been Removed.

  May also be shown as 816f0a0c200effff or 0x816f0a0c200effff

  Severity
  Info

  Serviceable
  No

  Automatically notify support
  No

  Alert Category
  Critical - Temperature

  SNMP Trap ID
  0

  CIM Information
  Prefix: PLAT **ID:** 0147

  User Response
  No action; information only.

- **816f0a0c-200fffff : An Over-Temperature Condition has been removed on the [PhysicalMemoryElementName] on Subsystem [MemoryElementName]. (DIMM 15)**

  This message is for the use case when an implementation has detected an Over Temperature Condition for Memory that has been Removed.

  May also be shown as 816f0a0c200fffff or 0x816f0a0c200fffff

  Severity
  Info

  Serviceable
  No

  Automatically notify support
  No

  Alert Category
  Critical - Temperature

  SNMP Trap ID
  0

  CIM Information

Prefix: PLAT **ID:** 0147

User Response
No action; information only.

- **816f0a0c-2010ffff : An Over-Temperature Condition has been removed on the [PhysicalMemoryElementName] on Subsystem [MemoryElementName]. (DIMM 16)**

  This message is for the use case when an implementation has detected an Over Temperature Condition for Memory that has been Removed.

  May also be shown as 816f0a0c2010ffff or 0x816f0a0c2010ffff

  Severity
  Info

  Serviceable
  No

  Automatically notify support
  No

  Alert Category
  Critical - Temperature

  SNMP Trap ID
  0

  CIM Information
  Prefix: PLAT **ID:** 0147

  User Response
  No action; information only.

- **816f0a0c-2011ffff : An Over-Temperature Condition has been removed on the [PhysicalMemoryElementName] on Subsystem [MemoryElementName]. (DIMM 17)**

  This message is for the use case when an implementation has detected an Over Temperature Condition for Memory that has been Removed.

  May also be shown as 816f0a0c2011ffff or 0x816f0a0c2011ffff

  Severity
  Info

  Serviceable
  No

  Automatically notify support
  No

  Alert Category
  Critical - Temperature

  SNMP Trap ID
  0

  CIM Information
  Prefix: PLAT **ID:** 0147

  User Response
  No action; information only.

- **816f0a0c-2012ffff : An Over-Temperature Condition has been removed on the [PhysicalMemoryElementName] on Subsystem [MemoryElementName]. (DIMM 18)**

  This message is for the use case when an implementation has detected an Over Temperature Condition for Memory that has been Removed.

  May also be shown as 816f0a0c2012ffff or 0x816f0a0c2012ffff

  Severity
  Info

  Serviceable
  No

  Automatically notify support
  No

  Alert Category
  Critical - Temperature

  SNMP Trap ID
  0

  CIM Information
  Prefix: PLAT **ID:** 0147

  User Response
  No action; information only.

- **816f0a0c-2013ffff : An Over-Temperature Condition has been removed on the [PhysicalMemoryElementName] on Subsystem [MemoryElementName]. (DIMM 19)**

  This message is for the use case when an implementation has detected an Over Temperature Condition for Memory that has been Removed.

  May also be shown as 816f0a0c2013ffff or 0x816f0a0c2013ffff

  Severity
  Info

  Serviceable
  No

  Automatically notify support
  No

  Alert Category
  Critical - Temperature

  SNMP Trap ID
  0

  CIM Information
  Prefix: PLAT **ID:** 0147

  User Response
  No action; information only.

- **816f0a0c-2014ffff : An Over-Temperature Condition has been removed on the [PhysicalMemoryElementName] on Subsystem [MemoryElementName]. (DIMM 20)**

  This message is for the use case when an implementation has detected an Over Temperature Condition for Memory that has been Removed.

May also be shown as 816f0a0c2014ffff or 0x816f0a0c2014ffff

Severity
Info

Serviceable
No

Automatically notify support
No

Alert Category
Critical - Temperature

SNMP Trap ID
0

CIM Information
Prefix: PLAT **ID:** 0147

User Response
No action; information only.

- **816f0a0c-2015ffff : An Over-Temperature Condition has been removed on the [PhysicalMemoryElementName] on Subsystem [MemoryElementName]. (DIMM 21)**

  This message is for the use case when an implementation has detected an Over Temperature Condition for Memory that has been Removed.

  May also be shown as 816f0a0c2015ffff or 0x816f0a0c2015ffff

  Severity
  Info

  Serviceable
  No

  Automatically notify support
  No

  Alert Category
  Critical - Temperature

  SNMP Trap ID
  0

  CIM Information
  Prefix: PLAT **ID:** 0147

  User Response
  No action; information only.

- **816f0a0c-2016ffff : An Over-Temperature Condition has been removed on the [PhysicalMemoryElementName] on Subsystem [MemoryElementName]. (DIMM 22)**

  This message is for the use case when an implementation has detected an Over Temperature Condition for Memory that has been Removed.

  May also be shown as 816f0a0c2016ffff or 0x816f0a0c2016ffff

  Severity
  Info

  Serviceable

No

Automatically notify support
No

Alert Category
Critical - Temperature

SNMP Trap ID
0

CIM Information
Prefix: PLAT **ID:** 0147

User Response
No action; information only.

- **816f0a0c-2017ffff : An Over-Temperature Condition has been removed on the [PhysicalMemoryElementName] on Subsystem [MemoryElementName]. (DIMM 23)**

  This message is for the use case when an implementation has detected an Over Temperature Condition for Memory that has been Removed.

  May also be shown as 816f0a0c2017ffff or 0x816f0a0c2017ffff

  Severity
  Info

  Serviceable
  No

  Automatically notify support
  No

  Alert Category
  Critical - Temperature

  SNMP Trap ID
  0

  CIM Information
  Prefix: PLAT **ID:** 0147

  User Response
  No action; information only.

- **816f0a0c-2018ffff : An Over-Temperature Condition has been removed on the [PhysicalMemoryElementName] on Subsystem [MemoryElementName]. (DIMM 24)**

  This message is for the use case when an implementation has detected an Over Temperature Condition for Memory that has been Removed.

  May also be shown as 816f0a0c2018ffff or 0x816f0a0c2018ffff

  Severity
  Info

  Serviceable
  No

  Automatically notify support
  No

  Alert Category

Critical - Temperature

SNMP Trap ID
0

CIM Information
Prefix: PLAT **ID:** 0147

User Response
No action; information only.

- **816f0a13-0301ffff : System [ComputerSystemElementName] has recovered from a Fatal Bus Error. (CPU 1 PECI)**

  This message is for the use case when an implementation has detected that a system has recovered from a Bus Fatal Error.

  May also be shown as 816f0a130301ffff or 0x816f0a130301ffff

  Severity
  Info

  Serviceable
  No

  Automatically notify support
  No

  Alert Category
  Critical - Other

  SNMP Trap ID
  50

  CIM Information
  Prefix: PLAT **ID:** 0245

  User Response

  1. (Trained technician only) Replace microprocessor n (see Removing a microprocessor and heat sink and Replacing a microprocessor and heat sink).
  2. If the problem persists and there is no other CPU with the same error indication, replace the system board.
  3. (Trained technician only) Replace the system board (see Removing the system board and Replacing the system board). (n = microprocessor number)

- **816f0a13-0302ffff : System [ComputerSystemElementName] has recovered from a Fatal Bus Error. (CPU 2 PECI)**

  This message is for the use case when an implementation has detected that a system has recovered from a Bus Fatal Error.

  May also be shown as 816f0a130302ffff or 0x816f0a130302ffff

  Severity
  Info

  Serviceable
  No

  Automatically notify support
  No

Alert Category

Critical - Other

SNMP Trap ID

50

CIM Information

Prefix: PLAT **ID:** 0245

User Response

1. (Trained technician only) Replace microprocessor n (see Removing a microprocessor and heat sink and Replacing a microprocessor and heat sink).
2. If the problem persists and there is no other CPU with the same error indication, replace the system board.
3. (Trained technician only) Replace the system board (see Removing the system board and Replacing the system board). (n = microprocessor number)

Appendix B. UEFI/POST diagnostic codes

UEFI/POST diagnostic error codes can be generated when the server starts or while the server is running. UEFI/POST codes are logged in the IMM event log in the server.

For each event code, the following fields are displayed:

Event identifier
An identifier that uniquely identifies an event.

Event description
The logged message string that appears for an event.

Explanation
Additional information to explain why the event occurred.

Severity
An indication of the level of concern for the condition. The severity is abbreviated in the event log to the first character. The following severities can be displayed.

Table 34. Event severity levels

Severity	Description
Informational	An informational message is something that was recorded for audit purposes, usually a user action or a change of states that is normal behavior.
Warning	A warning is not as severe as an error, but if possible, the condition should be corrected before it becomes an error. It might also be a condition that requires additional monitoring or maintenance.
Error	An error typically indicates a failure or critical condition that impairs service or an expected function.

User response
The actions that you should take to resolve the event.

Perform the steps in the order shown until the problem is solved. After you perform all of the actions that are described in this field, if you cannot solve the problem, contact Lenovo Support.

Booting server to F1 setup menu
In additional to the normal process in booting the server to the F1 setup menu (pressing F1 when `<F1 Setup>` is displayed), there are two other ways for users to choose.

- Method 1
  1. Proceed to the IMM2 website.
  2. Select **Server Management** tab.
  3. Select **Server Power Action**.
  4. Select **Boot Server to F1 Setup**.
- Method 2Use Advanced Settings Utility (ASU) program. Command line is shown as follows: **asu.exe set IMM.ForceBootToUefi enable**

Attention:

© Copyright Lenovo 2016, 2023

1. When you press `Ctrl+Alt+Delete` on F1 setup menu panel, the system will reboot automatically and ask you to enter password again.
2. Most F1 Setup settings, which can be load default, are chipset related items or less user input required items. However, when adjusting the iSCSI settings, please be aware that the iSCSI configurations cannot be restored to default. This is to avoid iSCSI items losing its configurations, which may result in the system not being able to boot to the operating system.

The following is the list of the UEFI/POST error codes and suggested actions to correct the detected problems.

List of UEFI events

This section lists all messages that can be sent from UEFI.

- **I.11002 A processor mismatch has been detected between one or more processors in the system. One or More Mismatched Processors Detected**

  Explanation:

  Severity
  Error

  User Response
  Complete the following steps:

  1. This message could occur with messages about other Processor configuration problems. Resolve those messages first.
  2. If the problem persists, ensure that matching processors are installed (i.e., matching option part numbers, etc)
  3. Verify that the Processor's are installed in the correct sockets according to the service information for this product. If not, correct that problem.
  4. Check IBM support site for an applicable service bulletin or UEFI firmware update that applies to this processor error.
  5. (Trained Service technician only) Replace mismatching processor. Inspect Processor socket and replace the system board first if socket is damaged.
- **I.1800A A mismatch has been detected between the speed at which a QPI link has trained between two or more processor packages. Processors have mismatched Bus Speed**

  Explanation:

  Severity
  Error

  User Response
  Complete the following steps:

  1. Verify that the processor is a valid option that is listed as a Server Proven device for this system. If not, remove the Processor and install one listed on the Server Proven website.
  2. Verify that matching processors are installed in the correct processor sockets. Correct any mismatch found.
  3. Check the IBM support site for an applicable service bulletin or firmware update that applies to this processor error.
  4. (Trained Service technician only) Replace the Processor. Inspect Processor socket and replace the system board first if socket is damaged

- **I.1800C A cache type mismatch has been detected for one or more processor packages. Processors have one or more cache levels with mismatched type**

  Explanation:

  Severity
  Error

  User Response
  Complete the following steps:

  1. Verify that matching processors are installed in the correct processor sockets. Correct any mismatch found.
  2. Check the IBM support site for an applicable service bulletin or firmware update that applies to this processor error.
  3. (Trained technician only)Replace the system board
- **I.1800D A cache associativity mismatch has been detected for one or more processor packages. Processors have one or more cache levels with mismatched associativity**

  Explanation:

  Severity
  Error

  User Response
  Complete the following steps:

  1. Verify that matching processors are installed in the correct processor sockets. Correct any mismatch found.
  2. Check the IBM support site for an applicable service bulletin or firmware update that applies to this processor error.
  3. (Trained technician only)Replace the system board
- **I.1800E A processor model mismatch has been detected for one or more processor packages. Processors have mismatched Model Number**

  Explanation:

  Severity
  Error

  User Response
  Complete the following steps:

  1. Verify that matching processors are installed in the correct processor sockets. Correct any mismatch found.
  2. Check the IBM support site for an applicable service bulletin or firmware update that applies to this Processor error.
  3. (Trained technician only)Replace the system board
- **I.1800F A processor family mismatch has been detected for one or more processor packages. Processors have mismatched Family**

  Explanation:

  Severity
  Error

  User Response
  Complete the following steps:

1. Verify that matching processors are installed in the correct processor sockets. Correct any mismatch found.
2. Check the IBM support site for an applicable service bulletin or firmware update that applies to this processor error.
3. (Trained technician only)Replace the system board

- **I.18010 A processor stepping mismatch has been detected for one or more processor packages. Processors of the same model have mismatched Stepping ID**

  Explanation:

  Severity
  Error

  User Response
  Complete the following steps:

  1. Verify that matching processors are installed in the correct processor sockets. Correct any mismatch found.
  2. Check the IBM support site for an applicable service bulletin or firmware update that applies to this processor error.
  3. (Trained technician only)Replace the system board

- **I.2018002 The device found at Bus [arg1] Device [arg2] Function [arg3] could not be configured due to resource constraints. The Vendor ID for the device is [arg4] and the Device ID is [arg5]. OUT_OF_RESOURCES (PCI Option ROM)**

  Explanation:

  Severity
  Info

  User Response
  Complete the following steps:

  1. If this PCIe device and/or any attached cables were recently installed, moved, serviced or upgraded, reseat the adapter and any attached cables.
  2. Check IBM support site for any applicable service bulletin or UEFI or adapter firmware update that applies to this error. NOTE: It may be necessary to disable unused option ROMs from UEFI F1 setup or ToolsCenter Suite CLI or using adapter manufacturer utilities so that adapter firmware can be updated.
  3. Move the adapter to a different slot. If a slot is not available or error recurs, replace the adapter.
  4. If the adapter was moved to a different slot and the error did not recur, verify that this is not a system limitation. Then replace the system board. Also, if this is not the initial installation and the error persists after adapter replacement, replace the system board.

- **I.2018003 A bad option ROM checksum was detected for the device found at Bus [arg1] Device [arg2] Function [arg3]. The Vendor ID for the device is [arg4] and the Device ID is [arg5]. ROM CHECKSUM ERROR**

  Explanation:

  Severity
  Error

  User Response
  Complete the following steps:

  1. If this PCIe device and/or any attached cables were recently installed, moved, serviced or upgraded, reseat the adapter and any attached cables.

2. Move the adapter to a different system slot, if available.
3. Check IBM support site for any applicable service bulletin or UEFI or adapter firmware update that applies to this error. NOTE: It may be necessary to configure slot to Gen1 or to use special utility software so that adapter firmware can be upgraded. Gen1/Gen2 settings can be configured via F1 Setup -> System Settings -> Devices and I/O Ports -> PCIe Gen1/Gen2/Gen3 Speed Selection, or the ToolsCenter Suite CLI Utility.
4. Replace the adapter.

- **I.3808004 The IMM System Event log (SEL) is full. IPMI System Event Log is Full**

  Explanation:

  Severity
  Info

  User Response
  Complete the following steps:
  1. Use the IMM Web Interface to clear the event log.
  2. If IMM communication is unavailable, use F1 Setup to access System Event Logs Menu and Choose Clear IMM System Event Log and Restart Server.

- **I.3818001 The firmware image capsule signature for the currently booted flash bank is invalid. Current Bank CRTM Capsule Update Signature Invalid**

  Explanation:

  Severity
  Info

  User Response
  Complete the following steps:
  1. Reboot the system. Will come up on backup UEFI image. Update the primary UEFI image.
  2. If error does not persist no additional recovery action is required.
  3. If error persists, or boot is unsuccessful, (Trained service technician only) Replace the system board.

- **I.3818002 The firmware image capsule signature for the non-booted flash bank is invalid. Opposite Bank CRTM Capsule Update Signature Invalid**

  Explanation:

  Severity
  Info

  User Response
  Complete the following steps:
  1. Update the backup UEFI image.
  2. If error does not persist no additional recovery action is required.
  3. If error persists, or boot is unsuccessful, (Trained service technician only) Replace the system board.

- **I.3818003 The CRTM flash driver could not lock the secure flash region. CRTM Could not lock secure flash region**

  Explanation:

  Severity
  Info

User Response

Complete the following steps:

1. If system failed to boot successfully, DC cycle the system.
2. If system boots to F1 setup, update the UEFI image and reset bank to primary (if required). If the system boots without error, recovery is complete and no additional action is required.
3. If system fails to boot, or if the firmware update attempt fails, (trained service technician only) replace the system board.

- **I.3818009 The TPM could not be properly initialized. TPMINIT: Fail to initialize TPM chip.**

Explanation:

Severity

Info

User Response

Complete the following steps:

1. Check the IBM support site for an applicable service bulletin or firmware update that applies to this error.
2. Reboot the system.
3. If the error continues, replace the system-board assembly (see Removing the system-board assembly and Installing the system-board assembly).

- **I.3868000 IFM: System reset performed to reset adapters. IFM: System reset performed to reset adapters**

Explanation:

Severity

Info

User Response

Complete the following steps:

1. Information only; no action is required.

- **I.3868003 IFM: Configuration to large for compatibility mode. IFM: Configuration too large for compatibility mode**

Explanation:

Severity

Info

User Response

Complete the following steps:

1. Information only; no action is required.

- **I.5100B An unqualified DIMM serial number has been detected: serial number [arg1] found in slot [arg2] of memory card [arg3]. Unqualified DIMM Serial Number Detected**

Explanation:

Severity

Info

User Response

Complete the following steps:

1. If this information event is logged in the IMM event log, the server does not have qualified memory installed.

2. The memory installed may not be covered under warranty.
3. Without qualified memory, speeds supported above industry standards will not be enabled.
4. Please contact your Local Sales Representative or Authorized Business Partner to order qualified memory to replace the unqualified DIMM(s).
5. After you install qualified memory and power up the server, check to make sure this informational event is not logged again.

- **I.58015 Memory spare copy initiated. Spare Copy Started**

  Explanation:

  Severity
  Info

  User Response
  Complete the following steps:

  1. Information only; no action is required.

- **I.580A4 Memory population change detected. DIMM Population Change Detected**

  Explanation:

  Severity
  Info

  User Response
  Complete the following steps:

  1. If you have added or removed DIMMs to the system, and no additional errors were detected, then please ignore this message.
  2. Check system event log for uncorrected DIMM failures and replace those DIMMs.

- **I.580A5 Mirror Fail-over complete. DIMM number [arg1] has failed over to to the mirrored copy. DIMM Mirror Fail-over Detected**

  Explanation:

  Severity
  Info

  User Response
  Complete the following steps:

  1. Check the system-event log for uncorrected DIMM failures and replace those DIMMs.

- **I.580A6 Memory spare copy has completed successfully. Spare Copy Complete**

  Explanation:

  Severity
  Info

  User Response
  Complete the following steps:

  1. If you have added or removed DIMMs to the system, and no additional errors were detected, then please ignore this message.
  2. Check system event log for uncorrected DIMM failures and replace those DIMMs.

- **S.1100B CATERR(IERR) has asserted on processor [arg1]. Processor CATERR(IERR) has asserted**

  Explanation:

  Severity

Error

User Response

Complete the following steps:

1. Check IBM support site for an applicable service bulletin or UEFI firmware update that applies to this Processor error.
2. (Trained service technician only) If there are multiple Processor's, swap Processor's to move affected Processor to another Processor socket and retry. If problem follows the affected Processor, or this is a single Processor system, replace the Processor.
3. (Trained Service technician only) Inspect Processor socket on each Processor removal and replace system board first if damaged or mis-aligned pins are found. Replace the system board.

- **S.1100C An uncorrectable error has been detected on processor [arg1]. Uncorrectable processor error detected**

Explanation:

Severity

Error

User Response

Complete the following steps:

1. Check the IBM support site for an applicable service bulletin or firmware update that applies to this error.
2. (Trained service technician only) If there are multiple Processor's, swap Processor's to move affected Processor to another Processor socket and retry. If problem follows the affected Processor, or this is a single Processor system, replace the Processor.
3. (Trained Service technician only) Inspect Processor socket on each Processor removal and replace system board first if damaged or mis-aligned pins are found. Replace the system board.

- **S.2011001 An Uncorrected PCIe Error has Occurred at Bus [arg1] Device [arg2] Function [arg3]. The Vendor ID for the device is [arg4] and the Device ID is [arg5]. PCI SERR Detected**

Explanation:

Severity

Error

User Response

Complete the following steps:

1. Check IBM support site for an applicable device driver, firmware update, version of service information for this product or other information that applies to this error. Load new device driver and any required firmware updates.
2. If this node and/or any attached cables were recently installed, moved, serviced or upgraded, a. Reseat Adapter and any attached cables. b. Reload Device Driver c. If device is not recognized, reconfiguring slot to Gen1 or Gen2 may be required. Gen1/Gen2 settings can be configured via F1 Setup -> System Settings -> Devices and I/O Ports -> PCIe Gen1/Gen2/Gen3 Speed Selection, or the ToolsCenter Suite CLI Utility.
3. If problem persists, then remove Adapter Card. If system reboots successfully without the adapter, replace that card.
4. (Trained Service technician only) Replace the system board.
5. (Trained Service technician only) Replace the processor.

- **S.2018001 An Uncorrected PCIe Error has Occurred at Bus [arg1] Device [arg2] Function [arg3]. The Vendor ID for the device is [arg4] and the Device ID is [arg5]. PCIe Uncorrected Error Detected**

Explanation:

Severity
Error

User Response
Complete the following steps:

1. Check IBM support site for an applicable device driver, firmware update, version of service information for this product or other information that applies to this error. Load new device driver and any required firmware updates.
2. If this node and/or any attached cables were recently installed, moved, serviced or upgraded, a. Reseat Adapter and any attached cables. b. Reload Device Driver c. If device is not recognized, reconfiguring slot to Gen1 or Gen2 may be required. Gen1/Gen2 settings can be configured via F1 Setup -> System Settings -> Devices and I/O Ports -> PCIe Gen1/Gen2/Gen3 Speed Selection, or the ToolsCenter Suite CLI Utility.
3. If problem persists, then remove Adapter Card. If system reboots successfully without the adapter, replace that card.
4. (Trained Service technician only) Replace the system board.
5. (Trained Service technician only) Replace the processor.

- **S.3020007 A firmware fault has been detected in the UEFI image. Internal UEFI Firmware Fault Detected, System halted**

  Explanation:

  Severity
  Error

  User Response
  Complete the following steps:

  1. Check the IBM support site for an applicable service bulletin or firmware update that applies to this error.
  2. Update the UEFI image.
  3. (Trained service technician only) Replace the system board.

- **S.3028002 Boot permission timeout detected. Boot Permission Negotiation Timeout**

  Explanation:

  Severity
  Error

  User Response
  Complete the following steps:

  1. Check CMM/IMM logs for communication errors and resolve.
  2. Reseat the system
  3. If problem persists contact support

- **S.3030007 A firmware fault has been detected in the UEFI image. Internal UEFI Firmware Fault Detected, System halted**

  Explanation:

  Severity
  Error

  User Response
  Complete the following steps:

1. Check IBM support site for an applicable service bulletin or firmware update that applies to this error.
2. Update the UEFI image.
3. Replace the system board.

- **S.3040007 A firmware fault has been detected in the UEFI image. Internal UEFI Firmware Fault Detected, System halted**

  Explanation:

  Severity
  Error

  User Response
  Complete the following steps:

  1. Check IBM support site for an applicable service bulletin or firmware update that applies to this error.
  2. Update the UEFI image.
  3. Replace the system board.

- **S.3050007 A firmware fault has been detected in the UEFI image. Internal UEFI Firmware Fault Detected, System halted**

  Explanation:

  Severity
  Error

  User Response
  Complete the following steps:

  1. Check IBM support site for an applicable service bulletin or firmware update that applies to this error.
  2. Update the UEFI image.
  3. Replace the system board.

- **S.3058004 A Three Strike boot failure has occurred. The system has booted with default UEFI settings. POST failure has occurred! System booted with default settings.**

  Explanation:

  Severity
  Error

  User Response
  Complete the following steps:

  1. This event resets UEFI to the default settings for the next boot. If successful, the Setup Utility is displayed. The original UEFI settings are still present.
  2. If you did not intentionally trigger the reboots, check logs for probable cause.
  3. Undo recent system changes (settings or devices added). If there were no recent system changes, remove all options, and then remove the CMOS battery for 30 seconds to clear CMOS contents. Verify that the system boots. Then, re-install the options one at a time to locate the problem.
  4. Check the IBM support site for an applicable service bulletin or firmware update that applies to this error.
  5. Update the UEFI firmware.
  6. Remove and re-install CMOS battery for 30 seconds to clear CMOS contents.

7. (Trained service technician only) Replace the system board.

- **S.3060007 A firmware fault has been detected in the UEFI image. Internal UEFI Firmware Fault Detected, System halted**

  Explanation:

  Severity
  Error

  User Response
  Complete the following steps:

  1. Check IBM support site for an applicable service bulletin or firmware update that applies to this error.
  2. Update the UEFI image.
  3. Replace the system board.

- **S.3070007 A firmware fault has been detected in the UEFI image. Internal UEFI Firmware Fault Detected, System halted**

  Explanation:

  Severity
  Error

  User Response
  Complete the following steps:

  1. Check IBM support site for an applicable service bulletin or firmware update that applies to this error.
  2. Update the UEFI image.
  3. Replace the system board.

- **S.3108007 The default system settings have been restored. System Configuration Restored to Defaults**

  Explanation:

  Severity
  Error

  User Response
  Complete the following steps:

  1. Check IBM support site for an applicable service bulletin or firmware update that applies to this error.

- **S.3818004 The CRTM flash driver could not successfully flash the staging area. A failure occurred. CRTM Update Failed**

  Explanation:

  Severity
  Error

  User Response
  Complete the following steps:

  1. Continue booting the system. If the system does not reset, manually reset the system.
  2. If the error is not reported on the subsequent boot, no additional recovery action is required.
  3. If the error persists, continue booting system and update the UEFI image.
  4. (Trained service technician only) Replace the system board.

- **S.3818007 The firmware image capsules for both flash banks could not be verified. CRTM image capsule could not be verified**

  Explanation:

  Severity
  Error

  User Response
  Complete the following steps:

  1. If system failed to boot successfully, DC cycle system.
  2. If system boots to F1 setup, update the UEFI image and reset bank to primary (if required). If the system boots without error, recovery is complete and no additional action is required.
  3. If system fails to boot, or if the firmware update attempt fails, (trained service technician only) replace the system board.
- **S.51003 An uncorrectable memory error was detected in DIMM slot [arg1] on rank [arg2]. An uncorrectable memory error was detected on processor [arg3] channel [arg4]. The failing DIMM within the channel could not be determined. An uncorrectable memory error has been detected. Fatal Memory Error Occurred**

  Explanation:

  Severity
  Error

  User Response
  Complete the following steps:

  1. Check IBM support site for an applicable service bulletin or firmware update that applies to this memory error.
  2. If the node has recently been installed, moved, serviced, or upgraded, verify that the DIMM is properly seated and visually verify that there is no foreign material in any DIMM connector on that memory channel. If either of these conditions is found, correct and retry with the same DIMM. (Note: Event Log may contain a recent 580A4 event denoting detected change in DIMM population that could be related to this problem.)
  3. If no problem is observed on the DIMM connectors and the problem persists, replace the DIMM identified by LightPath and/or event log entry.
  4. If problem re-occurs on the same DIMM connector, swap the other DIMMs on the same memory channel across channels one at a time to a different memory channel or Processor. (check service information for this product/Install guide for population requirements for sparing/paring modes). If problem follows a moved DIMM to a different memory channel, replace that DIMM.
  5. (Trained service technician only) Remove affected Processor and inspect Processor socket pins for damaged or mis-aligned pins. If damage is found, or this is an upgrade Processor, replace the system board. If there are multiple Processor's, swap Processor's to move affected Processor to another Processor socket and retry. If problem follows the affected Processor (or there is only one Processor), replace the affected Processor.
  6. (Trained technician only)If problem stays with the original DIMM connector, re-inspect DIMM connector for foreign material and remove, if found. If connector is damaged, replace system board
- **S.51006 A memory mismatch has been detected. Please verify that the memory configuration is valid. One or More Mismatched DIMMs Detected**

  Explanation:

  Severity

Error

User Response

Complete the following steps:

1. Could follow an uncorrectable memory error or failed memory test. Check the log and service that event first. DIMMs disabled by other errors or actions could cause this event.
2. Verify that the DIMMs are installed in the correct population sequence.
3. Disable memory mirroring and sparing. If this action eliminates the mismatch, check the IBM Support site for information related to this problem.
4. Update UEFI firmware.
5. Replace the DIMM.
6. Replace the processor.

- **S.51009 No system memory has been detected. No Memory Detected**

Explanation:

Severity

Error

User Response

Complete the following steps:

1. If any memory errors are logged other than this one, take actions indicated for those codes first.
2. If no other memory diagnostic codes appear in the logs, verify that all DIMM connectors are enabled using the Setup utility or the ToolsCenter Suite CLI.
3. If the problem remains, shut down and remove node from chassis and physically verify that one or more DIMMs are installed and that all DIMMs are installed in the correct population sequence.
4. If DIMMs are present and properly installed, check for any lit DIMM-connector LEDs, and if found, reseat those DIMMs.
5. Reinstall node in chassis, power on node, then check logs for memory diagnostic codes.
6. (Trained technician only) If the problem remains, replace the processor.
7. (Trained technician only) If the problem remains, replace the system board.

- **S.58008 A DIMM has failed the POST memory test. DIMM Failed Memory Test**

Explanation:

Severity

Error

User Response

Complete the following steps:

1. You must AC-cycle the system to re-enable the affected DIMM connector or re-enable manually using the Setup utility.
2. If the compute node has been recently installed, serviced, moved, or upgraded, check to ensure that DIMMs are firmly seated and that no foreign material can be seen in the DIMM connector. If either condition is observed, correct and retry with the same DIMM. (Note: The event Log might contain a recent 00580A4 event denoting detected change in DIMM population that could be related to this problem.)
3. If problem persists, replace the DIMM identified by LightPath and/or event log entry.
4. If problem recurs on the same DIMM connector, swap the other DIMMs on the same memory channel across channels one at a time to a different memory channel or processor. If problem follows a moved DIMM to a different memory channel, replace that DIMM.

5. Check the IBM support site for an applicable service bulletin or firmware update that applies to this memory error.
6. (Trained service technician only) Remove affected Processor and inspect Processor socket pins for damaged or mis-aligned pins. If damage is found, or this is an upgrade Processor, replace the system board. If there are multiple Processor's, swap Processor's to move affected Processor to another Processor socket and retry. If problem follows the affected Processor (or there is only one Processor), replace the affected Processor.
7. If problem stays with the original DIMM connector, re-inspect DIMM connector for foreign material and remove, if found. If connector is damaged, replace system board

- **S.68005 An error has been detected by the the IIO core logic on Bus [arg1]. The Global Fatal Error Status register contains [arg2]. The Global Non-Fatal Error Status register contains [arg3]. Please check error logs for the presence of additional downstream device error data. Critical IOH-PCI Error**

  Explanation:

  Severity
  Error

  User Response
  Complete the following steps:

  1. Check the log for a separate error related to an associated PCIe device and resolve that error.
  2. Check the IBM support site for an applicable service bulletin or firmware update for the system or adapter that applies to this error.
  3. Replace the I/O device or PCIe adapter
  4. (Trained technician only)Replace the system board reported in the error.

- **S.680B8 Internal QPI Link Failure Detected. Internal QPI Link Failure Detected**

  Explanation:

  Severity
  Error

  User Response
  Complete the following steps:

  1. Check the IBM support site for an applicable service bulletin or firmware update that applies to this error.
  2. Inspect the processor socket for foreign debris or damage. If debris is found, remove the debris.
  3. (Trained technician only)If error recurs, or socket damage is found, replace the system board
  4. (Trained Service Technician Only) Replace the processor.

- **S.680B9 External QPI Link Failure Detected. External QPI Link Failure Detected**

  Explanation:

  Severity
  Error

  User Response
  Complete the following steps:

  1. Check the IBM support site for an applicable service bulletin or firmware update that applies to this error.
  2. Inspect the processor socket for foreign debris or damage. If debris is found, remove the debris.
  3. (Trained technician only)If error recurs, or socket damage is found, replace the system board

- **W.11004 A processor within the system has failed the BIST. Processor Self Test Failure Detected**

  Explanation:

  Severity
  Error

  User Response
  Complete the following steps:

  1. If the processor or firmware was just updated, check the IBM support site for an applicable service bulletin or firmware update that applies to this processor error.
  2. (Trained service technician only) If there are multiple Processor's, swap Processor's to move affected Processor to another Processor socket and retry. If problem follows the affected Processor, or this is a single Processor processor. Inspect the processor socket on each processor removal and replace system board first if the processor socket is damaged or mis-aligned pins are found.
  3. (Trained Service technician only) Inspect Processor socket on each Processor removal and replace system board first if damaged or mis-aligned pins are found. Replace the system board.
- **W.3048006 UEFI has booted from the backup flash bank due to an Automatic Boot Recovery (ABR) event. Automated Boot Recovery, Booting Backup UEFI Image**

  Explanation:

  Severity
  Warning

  User Response
  Complete the following steps:

  1. Check the IBM support site for an applicable service bulletin or firmware update that applies to this error.
  2. Update the primary UEFI image.
  3. Replace the system board.
- **W.305000A An invalid date and time have been detected. RTC Date and Time Incorrect**

  Explanation:

  Severity
  Warning

  User Response
  Complete the following steps:

  1. Check IMM/chassis event log. This event should immediately precede 0068002 error. Resolve that event or any other battery related errors.
  2. Use F1 Setup to reset date and time. If problem returns after a system reset, replace CMOS battery.
  3. If problem persists then check IBM support site for an applicable service bulletin or firmware update that applies to this error.
  4. (Trained service technician only) Replace the system board.
- **W.3058009 DRIVER HEALTH PROTOCOL: Missing Configuration. Requires Change Settings From F1. DRIVER HEALTH PROTOCOL: Missing Configuration. Requires Change Settings From F1**

  Explanation:

  Severity

Warning

User Response

Complete the following steps:

1. Go to F1 Setup > System Settings > Settings > Driver Health Status List and find a driver/controller reporting Configuration Required status.
2. Search for the driver menu from System Settings and change settings appropriately.
3. Save settings and restart system.

- **W.305800A DRIVER HEALTH PROTOCOL: Reports 'Failed' Status Controller. DRIVER HEALTH PROTOCOL: Reports 'Failed' Status Controller**

  Explanation:

  Severity

  Warning

  User Response

  Complete the following steps:

  1. Reboot the system.
  2. If problem persists, switch to backup UEFI or update the current UEFI image.
  3. Replace the system board.

- **W.305800B DRIVER HEALTH PROTOCOL: Reports 'Reboot' Required Controller. DRIVER HEALTH PROTOCOL: Reports 'Reboot' Required Controller**

  Explanation:

  Severity

  Warning

  User Response

  Complete the following steps:

  1. No action required. The system will reboot at the end of POST.
  2. If the problem persists, switch to the backup UEFI image or update the current UEFI image.
  3. Replace the system board.

- **W.305800C DRIVER HEALTH PROTOCOL: Reports 'System Shutdown' Required Controller. DRIVER HEALTH PROTOCOL: Reports 'System Shutdown' Required Controller**

  Explanation:

  Severity

  Warning

  User Response

  Complete the following steps:

  1. No action required. The system will reboot at the end of POST.
  2. If the problem persists, switch to the backup UEFI image or update the current UEFI image.
  3. Replace the system board.

- **W.305800D DRIVER HEALTH PROTOCOL: Disconnect Controller Failed. Requires 'Reboot'. DRIVER HEALTH PROTOCOL: Disconnect Controller Failed. Requires 'Reboot'**

  Explanation:

  Severity

  Warning

User Response

Complete the following steps:

1. No action required. The system will reboot at the end of POST.
2. If the problem persists, switch to the backup UEFI image or update the current UEFI image.
3. Replace the system board.

- **W.305800E DRIVER HEALTH PROTOCOL: Reports Invalid Health Status Driver. DRIVER HEALTH PROTOCOL: Reports Invalid Health Status Driver**

Explanation:

Severity

Warning

User Response

Complete the following steps:

1. No action required. The system will reboot at the end of POST.
2. If the problem persists, switch to the backup UEFI image or update the current UEFI image.
3. Replace the system board.

- **W.3808000 An IMM communication failure has occurred. IMM Communication Failure**

Explanation:

Severity

Warning

User Response

Complete the following steps:

1. Reset the IMM from the CMM.
2. Use the CMM to remove auxiliary power from the compute node. This will reboot the compute node.
3. Check the IBM support site for an applicable service bulletin or firmware update that applies to this error.
4. Update the UEFI Firmware.
5. (Trained service technician only) Replace the system board.

- **W.3808002 An error occurred while saving UEFI settings to the IMM. Error Updating System Configuration to IMM**

Explanation:

Severity

Warning

User Response

Complete the following steps:

1. Use the Setup Utility to verify and save the settings (which will recover the settings).
2. Reset the IMM from the CMM.
3. Use CMM to remove auxiliary power from the compute node. This will reboot the compute node.
4. Check the IBM support site for an applicable service bulletin or firmware update that applies to this error.
5. Update the IMM Firmware.
6. Use CMOS clear jumper to clear CMOS

7. (Trained service technician only) Replace the system board.

- **W.3808003 Unable to retrieve the system configuration from the IMM. Error Retrieving System Configuration from IMM**

  Explanation:

  Severity
  Warning

  User Response
  Complete the following steps:

  1. Use the Setup Utility to verify and save the settings (which will recover the settings).
  2. Reset the IMM from the CMM.
  3. Use CMM to remove auxiliary power from the compute node. This will reboot the compute node.
  4. Check the IBM support site for an applicable service bulletin or firmware update that applies to this error.
  5. Update the IMM Firmware.
  6. Use CMOS clear jumper to clear CMOS
  7. (Trained service technician only) Replace the system board.

- **W.3818005 The CRTM flash driver could not successfully flash the staging area. The update was aborted CRTM Update Aborted**

  Explanation:

  Severity
  Warning

  User Response
  Complete the following steps:

  1. Continue booting the system. If system does not reset, manually reset the system.
  2. If the error is not reported on the subsequent boot, no additional recovery action is required.
  3. If the event persists, continue booting system and update the UEFI image.
  4. (Trained service technician only) Replace the system board.

- **W.3868001 IFM: Reset loop avoided - Multiple resets not allowed. IFM: Reset loop avoided - Multiple resets not allowed**

  Explanation:

  Severity
  Warning

  User Response
  Complete the following steps:

  1. Update all firmware (including adapter firmware) to the latest levels.
  2. If problem persists escalate to the next level of support.

- **W.3868002 IFM: Error communicating with the IMM - IFM may not be deployed correctly. IFM: Error communicating with the IMM - IFM may not be deployed correctly**

  Explanation:

  Severity
  Error

  User Response

Complete the following steps:

1. Update all firmware (including adapter firmware) to the latest levels.
2. If problem persists escalate to the next level of support.

- **W.3938002 A boot configuration error has been detected. Boot Configuration Error**

Explanation:

Severity
Warning

User Response
Complete the following steps:

1. F1 Setup -> Save Settings.
2. Retry OOB configuration update.

- **W.50001 A DIMM has been disabled due to an error detected during POST. DIMM Disabled**

Explanation:

Severity
Info

User Response
Complete the following steps:

1. If the DIMM was disabled because of a memory fault, follow the procedure for that event.
2. If no memory fault is recorded in the logs and no DIMM connector error LEDs are lit, re-enable the DIMM through the Setup utility or the ToolsCenter Suite CLI.
3. If the problem persists, Power cycle the compute node from the management console.
4. Reset the IMM to default settings.
5. Reset UEFI to default settings.
6. Update IMM and UEFI firmware.
7. Swap/reseat the DIMM from the disabled slot with a matching DIMM. If the slot remains disabled, (trained technician only) replace system board

- **W.58001 The PFA Threshold limit (correctable error logging limit) has been exceeded on DIMM number [arg1] at address [arg2]. MC5 Status contains [arg3] and MC5 Misc contains [arg4]. DIMM PFA Threshold Exceeded**

Explanation:

Severity
Error

User Response
Complete the following steps:

1. If the compute node has recently been installed, moved, serviced, or upgraded, verify that the DIMM is properly seated and visually verify that there is no foreign material in any DIMM connector on that memory channel. If either of these conditions is found, correct and retry with the same DIMM. (Note: The event Log might contain a recent 580A4 event denoting detected change in DIMM population that could be related to this problem.)
2. Check the IBM support site for an applicable firmware update that applies to this memory error. The release notes will list the known problems the update addresses.
3. If the previous steps do not resolve the problem, at the next maintenance opportunity, swap the DIMMs on the same memory channel one at a time to a different memory channel or Processor. (check service information for this product/Install guide for population requirements for sparing/

paring modes). If PFA follows a moved DIMM to any DIMM connector on the different memory channel, replace the moved DIMM.

4. If no problem is observed on the DIMM connectors and the problem persists, replace the DIMM identified by LightPath and/or event log entry.
5. If problem re-occurs on the same DIMM connector, swap the other DIMMs on the same memory channel across channels one at a time to a different memory channel or Processor. (check service information for this product/Install guide for population requirements for sparing/paring modes). If problem follows a moved DIMM to a different memory channel, replace that DIMM.
6. (Trained service technician only) Remove affected Processor and inspect Processor socket pins for damaged or mis-aligned pins. If damage is found, or this is an upgrade Processor, replace the system board. If there are multiple Processor's, swap Processor's to move affected Processor to another Processor socket and retry. If problem follows the affected Processor (or there is only one Processor), replace the affected Processor.
7. (Trained technician only)If problem stays with the original DIMM connector, re-inspect DIMM connector for foreign material and remove, if found. If connector is damaged, replace system board

- **W.58007 Invalid memory configuration (Unsupported DIMM Population) detected. Please verify memory configuration is valid. Unsupported DIMM Population**

  Explanation:

  Severity
  Error

  User Response
  Complete the following steps:

  1. Ensure that the DIMM connectors are populated according to the guidelines in the service information for this product.
  2. Ensure all DIMMs are enabled in the uEFI setup menu.
  3. If a DIMM connector error LED is lit, resolve the failure.

- **W.580A1 Invalid memory configuration for Mirror Mode. Please correct memory configuration. Unsupported DIMM Population for Mirror Mode**

  Explanation:

  Severity
  Error

  User Response
  Complete the following steps:

  1. If a DIMM connector error LED is lit, resolve the failure.
  2. Make sure that the DIMM connectors are correctly populated for mirroring mode.

- **W.580A2 Invalid memory configuration for Sparing Mode. Please correct memory configuration. Unsupported DIMM Population for Spare Mode**

  Explanation:

  Severity
  Error

  User Response
  Complete the following steps:

  1. If a DIMM connector error LED is lit, resolve the failure.

2. Make sure that the DIMM connectors are correctly populated for sparing mode, according to the service information for this product.

- **W.68002 A CMOS battery error has been detected CMOS Battery Fault**

  Explanation:

  Severity
  Error

  User Response
  Complete the following steps:

  1. If the system was recently installed, moved, or serviced, make sure the battery is properly seated.
  2. Check the IBM support site for an applicable service bulletin or firmware update that applies to this error.
  3. Replace the CMOS battery.
  4. (Trained technician only)Replace the system board

Appendix C. DSA diagnostic test results

After running the DSA diagnostic tests, use this information to resolve any issues that were found.

DSA Broadcom network test results

The following messages can result when you run the Broadcom network test.

Test results for the DSA Broadcom network test

The following messages can result when you run the DSA Broadcom network test.

- **405-000-000 : BRCM:TestControlRegisters Test Passed**

  The test passed.

  Recoverable
  No

  Severity
  Event

  Serviceable
  No

  Automatically notify support
  No

  Related links
  - IBM Support website
  - Latest level of DSA
  - Latest level of BMC/IMM
- **405-001-000 : BRCM:TestMIIRegisters Test Passed**

  The test passed.

  Recoverable
  No

  Severity
  Event

  Serviceable
  No

  Automatically notify support
  No

  Related links
  - IBM Support website
  - Latest level of DSA
  - Latest level of BMC/IMM
- **405-002-000 : BRCM:TestEEPROM Test Passed**

  The test passed.

  Recoverable
  No

© Copyright Lenovo 2016, 2023

Severity
Event

Serviceable
No

Automatically notify support
No

Related links
- IBM Support website
- Latest level of DSA
- Latest level of BMC/IMM

- **405-003-000 : BRCM:TestInternalMemory Test Passed**

The test passed.

Recoverable
No

Severity
Event

Serviceable
No

Automatically notify support
No

Related links
- IBM Support website
- Latest level of DSA
- Latest level of BMC/IMM

- **405-004-000 : BRCM:TestInterrupt Test Passed**

The test passed.

Recoverable
No

Severity
Event

Serviceable
No

Automatically notify support
No

Related links
- IBM Support website
- Latest level of DSA
- Latest level of BMC/IMM

- **405-005-000 : BRCM:TestLoopbackMAC Test Passed**

The test passed.

Recoverable
No

Severity
Event

Serviceable
No

Automatically notify support
No

Related links
- IBM Support website
- Latest level of DSA
- Latest level of BMC/IMM

- **405-006-000 : BRCM:TestLoopbackPhysical Test Passed**

The test passed.

Recoverable
No

Severity
Event

Serviceable
No

Automatically notify support
No

Related links
- IBM Support website
- Latest level of DSA
- Latest level of BMC/IMM

- **405-007-000 : BRCM:TestLEDs Test Passed**

The test passed.

Recoverable
No

Severity
Event

Serviceable
No

Automatically notify support
No

Related links
- IBM Support website
- Latest level of DSA
- Latest level of BMC/IMM

- **405-800-000 : BRCM:TestControlRegisters Test Aborted**

The control registers test was canceled.

Recoverable
No

Severity
Warning

Serviceable
No

Automatically notify support
No

Related links
- IBM Support website
- Latest level of DSA
- Latest level of BMC/IMM

- **405-801-000 : BRCM:TestMIIRegisters Test Aborted**

The MII register test was canceled.

Recoverable
No

Severity
Warning

Serviceable
No

Automatically notify support
No

Related links
- IBM Support website
- Latest level of DSA
- Latest level of BMC/IMM

- **405-802-000 : BRCM:TestEEPROM Test Aborted**

The EEPROM test was canceled.

Recoverable
No

Severity
Warning

Serviceable
No

Automatically notify support
No

Related links
- IBM Support website
- Latest level of DSA
- Latest level of BMC/IMM

- **405-803-000 : BRCM:TestInternalMemory Test Aborted**

The internal memory test was canceled.

Recoverable
No

Severity
Warning

Serviceable
No

Automatically notify support
No

Related links
- IBM Support website
- Latest level of DSA
- Latest level of BMC/IMM

- **405-804-000 : BRCM:TestInterrupt Test Aborted**

The interrupt test was canceled.

Recoverable
No

Severity
Warning

Serviceable
No

Automatically notify support
No

Related links
- IBM Support website
- Latest level of DSA
- Latest level of BMC/IMM

- **405-805-000 : BRCM:TestLoopbackMAC Test Aborted**

Loopback testing at the MAC layer was canceled.

Recoverable
No

Severity
Warning

Serviceable
No

Automatically notify support
No

Related links
- IBM Support website
- Latest level of DSA
- Latest level of BMC/IMM

- **405-806-000 : BRCM:TestLoopbackPhysical Test Aborted**

Loopback testing at the physical layer was canceled.

Recoverable
No

Severity
Warning

Serviceable
No

Automatically notify support
No

Related links
- IBM Support website

- Latest level of DSA
- Latest level of BMC/IMM

- **405-807-000 : BRCM:TestLEDs Test Aborted**

  Verification of status LEDs was canceled.

  Recoverable
  No

  Severity
  Warning

  Serviceable
  No

  Automatically notify support
  No

  Related links
  - IBM Support website
  - Latest level of DSA
  - Latest level of BMC/IMM

- **405-900-000 : BRCM:TestControlRegisters Test Failed**

  A failure was detected while testing internal MAC registers

  Recoverable
  No

  Severity
  Error

  Serviceable
  Yes

  Automatically notify support
  No

  User Response
  Complete the following steps:

  1. Check component firmware level and upgrade if necessary. The installed firmware level can be found in the DSA Diagnostic Event Log within the Firmware/VPD section for this component.
  2. Rerun the test.
  3. If failure remains, refer to "Troubleshooting by symptom" in the system "Installation and Service Guide" for the next corrective action.

  Related links
  - IBM Support website
  - Latest level of DSA
  - Latest level of BMC/IMM

- **405-901-000 : BRCM:TestMIIRegisters Test Failed**

  A failure was detected while testing internal PHY registers.

  Recoverable
  No

  Severity
  Error

  Serviceable

Yes

Automatically notify support
No

User Response
Complete the following steps:

1. Check component firmware level and upgrade if necessary. The installed firmware level can be found in the DSA Diagnostic Event Log within the Firmware/VPD section for this component.
2. Rerun the test.
3. If failure remains, refer to "Troubleshooting by symptom" in the system "Installation and Service Guide" for the next corrective action.

Related links
- IBM Support website
- Latest level of DSA
- Latest level of BMC/IMM

- **405-902-000 : BRCM:TestEEPROM Test Failed**

A failure was detected while testing non-volatile RAM.

Recoverable
No

Severity
Error

Serviceable
Yes

Automatically notify support
No

User Response
Complete the following steps:

1. Check component firmware level and upgrade if necessary. The installed firmware level can be found in the DSA Diagnostic Event Log within the Firmware/VPD section for this component.
2. Rerun the test.
3. If failure remains, refer to "Troubleshooting by symptom" in the system "Installation and Service Guide" for the next corrective action.

Related links
- IBM Support website
- Latest level of DSA
- Latest level of BMC/IMM

- **405-903-000 : BRCM:TestInternalMemory Test Failed**

A failure was detected while testing internal memory.

Recoverable
No

Severity
Error

Serviceable
Yes

Automatically notify support

No

User Response

Complete the following steps:

1. Check component firmware level and upgrade if necessary. The installed firmware level can be found in the DSA Diagnostic Event Log within the Firmware/VPD section for this component.
2. Rerun the test.
3. If failure remains, refer to "Troubleshooting by symptom" in the system "Installation and Service Guide" for the next corrective action.

Related links

- IBM Support website
- Latest level of DSA
- Latest level of BMC/IMM

- **405-904-000 : BRCM:TestInterrupt Test Failed**

A failure was detected while testing interrupts.

Recoverable

No

Severity

Error

Serviceable

Yes

Automatically notify support

No

User Response

Complete the following steps:

1. Check component firmware level and upgrade if necessary. The installed firmware level can be found in the DSA Diagnostic Event Log within the Firmware/VPD section for this component.
2. Rerun the test.
3. If failure remains, refer to "Troubleshooting by symptom" in the system "Installation and Service Guide" for the next corrective action.

Related links

- IBM Support website
- Latest level of DSA
- Latest level of BMC/IMM

- **405-905-000 : BRCM:TestLoopbackMAC Test Failed**

BRCM:TestLoopbackMAC Test Failed.

Recoverable

No

Severity

Error

Serviceable

Yes

Automatically notify support

No

User Response

Complete the following steps:

1. Check component firmware level and upgrade if necessary. The installed firmware level can be found in the DSA Diagnostic Event Log within the Firmware/VPD section for this component.
2. Rerun the test.
3. If failure remains, refer to "Troubleshooting by symptom" in the system "Installation and Service Guide" for the next corrective action.

Related links

- IBM Support website
- Latest level of DSA
- Latest level of BMC/IMM

- **405-906-000 : BRCM:TestLoopbackPhysical Test Failed**

A failure was detected during the loopback test at the physical layer.

Recoverable
No

Severity
Error

Serviceable
Yes

Automatically notify support
No

User Response
Complete the following steps:

1. Check component firmware level and upgrade if necessary. The installed firmware level can be found in the DSA Diagnostic Event Log within the Firmware/VPD section for this component.
2. Rerun the test.
3. If failure remains, refer to "Troubleshooting by symptom" in the system "Installation and Service Guide" for the next corrective action.

Related links

- IBM Support website
- Latest level of DSA
- Latest level of BMC/IMM

- **405-907-000 : BRCM:TestLEDs Test Failed**

A failure was detected while verifying operation of the status LEDs.

Recoverable
No

Severity
Error

Serviceable
Yes

Automatically notify support
No

User Response
Complete the following steps:

1. Check component firmware level and upgrade if necessary. The installed firmware level can be found in the DSA Diagnostic Event Log within the Firmware/VPD section for this component.
2. Rerun the test.
3. If failure remains, refer to "Troubleshooting by symptom" in the system "Installation and Service Guide" for the next corrective action.

Related links
- IBM Support website
- Latest level of DSA
- Latest level of BMC/IMM

DSA checkpoint panel test results

The following messages can result when you run the checkpoint panel test.

Test results for the DSA checkpoint panel test

The following messages can result when you run the DSA checkpoint panel test.

- **180-000-000 : Check-point Panel Test Passed**

  Check-point Panel Test Passed.

  Recoverable
  No

  Severity
  Event

  Serviceable
  No

  Automatically notify support
  No

  Related links
  - IBM Support website
  - Latest level of DSA
  - Latest level of BMC/IMM
- **180-801-000 : Check-point Panel Test Aborted**

  Check-point Panel Test Aborted. BMC is unable to verify that the operator information panel cable is connected.

  Recoverable
  No

  Severity
  Warning

  Serviceable
  Yes

  Automatically notify support
  No

  User Response
  Complete the following steps:

  1. Inspect and reseat operator information panel cable at both ends.

2. Verify that the Baseboard Management Controller (BMC) is working.
3. Run the test again.
4. If failure remains, refer to "Troubleshooting by symptom" in the system "Installation and Service Guide" for the next corrective action.

Related links

- IBM Support website
- Latest level of DSA
- Latest level of BMC/IMM

- **180-901-000 : Check-point Panel Test Failed**

  Check-point Panel Test Failed. Operator reported incorrect display.

  Recoverable
  No

  Severity
  Error

  Serviceable
  Yes

  Automatically notify support
  No

  User Response
  Complete the following steps:

  1. Check the operator information panel cabling for loose or broken connections at both ends or damage to the cable.
  2. Replace the information panel cable if damage is present.
  3. Run the test again.
  4. Replace the operator information panel assembly.
  5. Run the test again.
  6. If failure remains, refer to "Troubleshooting by symptom" in the system "Installation and Service Guide" for the next corrective action.

  Related links

  - IBM Support website
  - Latest level of DSA
  - Latest level of BMC/IMM

DSA CPU stress test results

The following messages can result when you run the CPU stress test.

Test results for the DSA CPU stress test

The following messages can result when you run the DSA CPU stress test.

- **089-000-000 : CPU Stress Test Passed**

  CPU Stress Test Passed.

  Recoverable
  No

Severity
Event

Serviceable
No

Automatically notify support
No

Related links
- IBM Support website
- Latest level of DSA
- Latest level of BMC/IMM

- **089-801-000 : CPU Stress Test Aborted**

CPU Stress Test Aborted. Internal Program Error.

Recoverable
No

Severity
Warning

Serviceable
Yes

Automatically notify support
No

User Response
Complete the following steps:

1. Turn off and restart the system.
2. Make sure that the DSA Diagnostic code is at the latest level.
3. Run the test again.
4. Check system firmware level and upgrade if necessary. The installed firmware level can be found in the DSA Diagnostic Event Log within the Firmware/VPD section for this component. The latest level firmware for this component can be found in reference to this system type at the IBM Support website.
5. Run the test again.
6. If the system has stopped responding, turn off and restart the system and then run the test again.
7. If failure remains, refer to "Troubleshooting by symptom" in the system "Installation and Service Guide" for the next corrective action.

Related links
- IBM Support website
- Latest level of DSA
- Latest level of BMC/IMM

- **089-802-000 : CPU Stress Test Aborted**

CPU Stress Test Aborted. System resource unavailability error.

Recoverable
No

Severity
Warning

Serviceable

Yes

Automatically notify support
No

User Response
Complete the following steps:

1. Turn off and restart the system.
2. Make sure that the DSA Diagnostic code is at the latest level.
3. Run the test again.
4. Check system firmware level and upgrade if necessary. The installed firmware level can be found in the DSA Diagnostic Event Log within the Firmware/VPD section for this component.
5. Run the test again.
6. If the system has stopped responding, turn off and restart the system and then run the test again.
7. If failure remains, refer to "Troubleshooting by symptom" in the system "Installation and Service Guide" for the next corrective action.

Related links
- IBM Support website
- Latest level of DSA
- Latest level of BMC/IMM

- **089-803-000 : CPU Stress Test Aborted**

CPU Stress Test Aborted. Memory size is insufficient to run the test. At least 1GB is required.

Recoverable
No

Severity
Warning

Serviceable
Yes

Automatically notify support
No

Related links
- IBM Support website
- Latest level of DSA
- Latest level of BMC/IMM

- **089-804-000 : CPU Stress Test Aborted**

CPU Stress Test Aborted. User pressed Ctrl-C.

Recoverable
No

Severity
Warning

Serviceable
Yes

Automatically notify support
No

Related links
- IBM Support website

- Latest level of DSA
- Latest level of BMC/IMM

- **089-901-000 : CPU Stress Test Failed**

  CPU Stress Test Failed.

  Recoverable
  No

  Severity
  Error

  Serviceable
  Yes

  Automatically notify support
  No

  User Response
  Complete the following steps:

  1. If the system has stopped responding, turn off and restart the system and then run the test again.
  2. Make sure that the DSA Diagnostic code is at the latest level.
  3. Run the test again.
  4. Check system firmware level and upgrade if necessary. The installed firmware level can be found in the DSA Diagnostic Event Log within the Firmware/VPD section for this component.
  5. Run the test again.
  6. If the system has stopped responding, turn off and restart the system and then run the test again.
  7. If failure remains, refer to "Troubleshooting by symptom" in the system "Installation and Service Guide" for the next corrective action.

  Related links
  - IBM Support website
  - Latest level of DSA
  - Latest level of BMC/IMM

DSA EXA port ping test results

The following messages can result when you run the EXA port ping test.

Test results for the DSA EXA port ping test

The following messages can result when you run the DSA EXA port ping test.

- **401-000-000 : EXA Port Ping Test Passed**

  EXA Port Ping Test Passed.

  Recoverable
  No

  Severity
  Event

  Serviceable
  No

  Automatically notify support

No

Related links

- IBM Support website
- Latest level of DSA
- Latest level of BMC/IMM

- **401-801-000 : EXA Port Ping Test Aborted**

EXA Port Ping Test Aborted. Unable to get device base address.

Recoverable
No

Severity
Warning

Serviceable
Yes

Automatically notify support
No

User Response
Complete the following steps:

1. Remove power cables, wait for 45 seconds, reconnect and rerun the test.
2. Make sure that the scalability cable connections are as per specification.
3. Make sure that DSA and BIOS/uEFI are at the latest level.
4. If the problem remains, contact your technical-service representative.

Related links

- IBM Support website
- Latest level of DSA
- Latest level of BMC/IMM

- **401-802-000 : EXA Port Ping Test Aborted**

EXA Port Ping Test Aborted. Port connections may not be correct.

Recoverable
No

Severity
Warning

Serviceable
Yes

Automatically notify support
No

User Response
Complete the following steps:

1. Remove power cables, wait for 45 seconds, reconnect and rerun the test.
2. Make sure that the scalability cable connections are as per specification.
3. Make sure that DSA and BIOS/uEFI are at the latest level.
4. If the problem remains, contact your technical-service representative.

Related links

- IBM Support website

- Latest level of DSA
- Latest level of BMC/IMM

- **401-901-001 : EXA Port Ping Test Failed**

  EXA Port Ping Test Failed.

  Recoverable
  No

  Severity
  Error

  Serviceable
  Yes

  Automatically notify support
  No

  User Response
  Complete the following steps:

  1. Remove power cables, wait for 45 seconds, reconnect and rerun the test.
  2. Make sure that the scalability cable connections are as per specification.
  3. Check scalability cables for loose connections.
  4. Replace the scalability cable(s) for specified port(s).
  5. If the problem remains, contact your technical-service representative.

  Related links
  - IBM Support website
  - Latest level of DSA
  - Latest level of BMC/IMM

DSA hard drive test results

The following messages can result when you run the hard drive test.

Test results for the DSA hard drive test

The following messages can result when you run the DSA hard drive test.

- **217-000-000 : HDD Test Passed**

  HDD Stress Test Passed.

  Recoverable
  No

  Severity
  Event

  Serviceable
  No

  Automatically notify support
  No

  Related links
  - IBM Support website
  - Latest level of DSA
  - Latest level of BMC/IMM

- **217-800-000 : HDD Test Aborted**

  HDD Test Aborted. The test was canceled.

  Recoverable
  No

  Severity
  Warning

  Serviceable
  Yes

  Automatically notify support
  No

  User Response
  Complete the following steps:

  1. Check cable connections.
  2. Rerun the test.
  3. Verify that Hard drive supports self test and self test logging.
  4. If the problem remains, contact your technical-support representative.

  Related links
  - IBM Support website
  - Latest level of DSA
  - Latest level of BMC/IMM

- **217-900-000 : HDD Test Failed**

  HDD Test Failed. The hard drive self-test detected a failure.

  Recoverable
  No

  Severity
  Error

  Serviceable
  Yes

  Automatically notify support
  No

  User Response
  Complete the following steps:

  1. Check cable connections.
  2. Rerun the test.
  3. Verify the firmware is at the latest level.
  4. Rerun the test.
  5. If the problem remains, contact your technical-support representative.

  Related links
  - IBM Support website
  - Latest level of DSA
  - Latest level of BMC/IMM

DSA Intel network test results

The following messages can result when you run the Intel network test.

Test results for the DSA Intel network test

The following messages can result when you run the DSA Intel network test.

- **406-000-000 : IANet:Registers Test Passed**

  The test passed.

  Recoverable
  No

  Severity
  Event

  Serviceable
  No

  Automatically notify support
  No

  Related links
  - IBM Support website
  - Latest level of DSA
  - Latest level of BMC/IMM
- **406-001-000 : IANet:EEPROM Test Passed**

  The test passed.

  Recoverable
  No

  Severity
  Event

  Serviceable
  No

  Automatically notify support
  No

  Related links
  - IBM Support website
  - Latest level of DSA
  - Latest level of BMC/IMM
- **406-002-000 : IANet:FIFO Test Passed**

  The test passed.

  Recoverable
  No

  Severity
  Event

  Serviceable
  No

Automatically notify support
No

Related links
- IBM Support website
- Latest level of DSA
- Latest level of BMC/IMM

- **406-003-000 : IANet:Interrupts Test Passed**

The test passed.

Recoverable
No

Severity
Event

Serviceable
No

Automatically notify support
No

Related links
- IBM Support website
- Latest level of DSA
- Latest level of BMC/IMM

- **406-004-000 : IANet:Loopback Test Passed**

The test passed.

Recoverable
No

Severity
Event

Serviceable
No

Automatically notify support
No

Related links
- IBM Support website
- Latest level of DSA
- Latest level of BMC/IMM

- **406-800-000 : IANet:Registers Test Aborted**

Registers test was canceled.

Recoverable
No

Severity
Warning

Serviceable
No

Automatically notify support
No

Related links
- IBM Support website
- Latest level of DSA
- Latest level of BMC/IMM

- **406-801-000 : IANet:EEPROM Test Aborted**

EEPROM test was canceled.

Recoverable
No

Severity
Warning

Serviceable
No

Automatically notify support
No

Related links
- IBM Support website
- Latest level of DSA
- Latest level of BMC/IMM

- **406-802-000 : IANet:FIFO Test Aborted**

FIFO test was canceled.

Recoverable
No

Severity
Warning

Serviceable
No

Automatically notify support
No

Related links
- IBM Support website
- Latest level of DSA
- Latest level of BMC/IMM

- **406-803-000 : IANet:Interrupts Test Aborted**

Interrupt test was canceled.

Recoverable
No

Severity
Warning

Serviceable
No

Automatically notify support
No

Related links
- IBM Support website

- Latest level of DSA
- Latest level of BMC/IMM

- **406-804-000 : IANet:Loopback Test Aborted**

  Loopback test was canceled.

  Recoverable
  No

  Severity
  Warning

  Serviceable
  No

  Automatically notify support
  No

  Related links
  - IBM Support website
  - Latest level of DSA
  - Latest level of BMC/IMM

- **406-900-000 : IANet:Registers Test Failed**

  A failure was detected during the Registers test.

  Recoverable
  No

  Severity
  Error

  Serviceable
  Yes

  Automatically notify support
  No

  User Response
  Complete the following steps:

  1. Check component firmware level and upgrade if necessary. The installed firmware level can be found in the DSA Diagnostic Event Log within the Firmware/VPD section for this component.
  2. Rerun the test.
  3. If failure remains, refer to "Troubleshooting by symptom" in the system "Installation and Service Guide" for the next corrective action.

  Related links
  - IBM Support website
  - Latest level of DSA
  - Latest level of BMC/IMM

- **406-901-000 : IANet:EEPROM Test Failed**

  A failure was detected during the EEPROM test.

  Recoverable
  No

  Severity
  Error

  Serviceable

Yes

Automatically notify support
No

User Response
Complete the following steps:

1. Check component firmware level and upgrade if necessary. The installed firmware level can be found in the DSA Diagnostic Event Log within the Firmware/VPD section for this component.
2. Rerun the test.
3. If failure remains, refer to "Troubleshooting by symptom" in the system "Installation and Service Guide" for the next corrective action.

Related links
- IBM Support website
- Latest level of DSA
- Latest level of BMC/IMM

- **406-902-000 : IANet:FIFO Test Failed**

A failure was detected during the FIFO test.

Recoverable
No

Severity
Error

Serviceable
Yes

Automatically notify support
No

User Response
Complete the following steps:

1. Check component firmware level and upgrade if necessary. The installed firmware level can be found in the DSA Diagnostic Event Log within the Firmware/VPD section for this component.
2. Rerun the test.
3. If failure remains, refer to "Troubleshooting by symptom" in the system "Installation and Service Guide" for the next corrective action.

Related links
- IBM Support website
- Latest level of DSA
- Latest level of BMC/IMM

- **406-903-000 : IANet:Interrupts Test Failed**

A failure was detected during the Interrupt test.

Recoverable
No

Severity
Error

Serviceable
Yes

Automatically notify support

No

User Response

Complete the following steps:

1. Check component firmware level and upgrade if necessary. The installed firmware level can be found in the DSA Diagnostic Event Log within the Firmware/VPD section for this component.
2. Rerun the test.
3. Check interrupt assignments in the PCI Hardware section of the DSA Diagnostic Log. If the ethernet device is sharing interrupts, if possible modify the interrupt assignments using F1 Setup to assign a unique interrupt to the device.
4. Rerun the test.
5. If failure remains, refer to "Troubleshooting by symptom" in the system "Installation and Service Guide" for the next corrective action.

Related links

- IBM Support website
- Latest level of DSA
- Latest level of BMC/IMM

- **406-904-000 : IANet:Loopback Test Failed**

A failure was detected during the Loopback test.

Recoverable

No

Severity

Error

Serviceable

Yes

Automatically notify support

No

User Response

Complete the following steps:

1. Check the Ethernet cable for damage and ensure correct cable type and attachment.
2. Check component firmware level and upgrade if necessary. The installed firmware level can be found in the DSA Diagnostic Event Log within the Firmware/VPD section for this component.
3. Rerun the test.
4. If failure remains, refer to "Troubleshooting by symptom" in the system "Installation and Service Guide" for the next corrective action.

Related links

- IBM Support website
- Latest level of DSA
- Latest level of BMC/IMM

DSA LSI hard drive test results

The following messages can result when you run the LSI hard drive test.

Test results for the DSA LSI hard drive test

The following messages can result when you run the DSA LSI hard drive test.

- **407-000-000 : LSIESG:DiskDefaultDiagnostic Test Passed**

  The test passed.

  Recoverable
  No

  Severity
  Event

  Serviceable
  No

  Automatically notify support
  No

  Related links
  - IBM Support website
  - Latest level of DSA
  - Latest level of BMC/IMM
- **407-800-000 : LSIESG:DiskDefaultDiagnostic Test Aborted**

  The test was canceled.

  Recoverable
  No

  Severity
  Warning

  Serviceable
  No

  Automatically notify support
  No

  Related links
  - IBM Support website
  - Latest level of DSA
  - Latest level of BMC/IMM
- **407-900-000 : LSIESG:DiskDefaultDiagnostic Test Failed**

  The hard drive self-test detected a failure.

  Recoverable
  No

  Severity
  Error

  Serviceable
  Yes

  Automatically notify support
  No

  User Response
  Complete the following steps:

  1. Check cable connections.
  2. Rerun the test.
  3. Verify whether the firmware is at the latest level.

4. Rerun the test.
5. If the problem remains, contact your IBM technical-support representative.

Related links
- IBM Support website
- Latest level of DSA
- Latest level of BMC/IMM

DSA memory isolation test results

The following messages can result when you run the memory isolation test.

Test results for the DSA memory isolation test

The following messages can result when you run the DSA memory isolation test.

- **201-000-000 : Standalone Memory Test Passed**

  Quick/Full Memory Test All CPUs Passed.

  Recoverable
  No

  Severity
  Event

  Serviceable
  No

  Automatically notify support
  No

  Related links
  - IBM Support website
  - Latest level of DSA
  - Latest level of BMC/IMM
- **201-000-001 : Standalone Memory Test Passed**

  Quick/Full Memory Test CPU 1 Passed.

  Recoverable
  No

  Severity
  Event

  Serviceable
  No

  Automatically notify support
  No

  Related links
  - IBM Support website
  - Latest level of DSA
  - Latest level of BMC/IMM
- **201-000-002 : Standalone Memory Test Passed**

  Quick/Full Memory Test CPU 2 Passed.

Recoverable
No

Severity
Event

Serviceable
No

Automatically notify support
No

Related links
- IBM Support website
- Latest level of DSA
- Latest level of BMC/IMM

- **201-000-003 : Standalone Memory Test Passed**

  Quick/Full Memory Test CPU 3 Passed.

  Recoverable
  No

  Severity
  Event

  Serviceable
  No

  Automatically notify support
  No

  Related links
  - IBM Support website
  - Latest level of DSA
  - Latest level of BMC/IMM

- **201-000-004 : Standalone Memory Test Passed**

  Quick/Full Memory Test CPU 4 Passed.

  Recoverable
  No

  Severity
  Event

  Serviceable
  No

  Automatically notify support
  No

  Related links
  - IBM Support website
  - Latest level of DSA
  - Latest level of BMC/IMM

- **201-811-000 : Standalone Memory Test Aborted**

  Unable to Locate SMBIOS key "_SM_".

  Recoverable
  No

Severity
Warning

Serviceable
No

Automatically notify support
No

User Response
Complete the following steps:

1. Perform the actions mentioned one at a time and try the test after each action.
2. If the problem remains, contact your technical-service representative.
3. Turn off the system and disconnect it from power. Wait for 45 seconds. Reseat DIMM(s). Reconnect it to power.
4. Make sure that DSA and BIOS/uEFI are at the latest level.

Related links
- IBM Support website
- Latest level of DSA
- Latest level of BMC/IMM

- **201-811-001 : Standalone Memory Test Aborted**

Unable to Locate SMBIOS key "_SM_".

Recoverable
No

Severity
Warning

Serviceable
No

Automatically notify support
No

User Response
Complete the following steps:

1. Perform the actions mentioned one at a time and try the test after each action.
2. If the problem remains, contact your technical-service representative.
3. Turn off the system and disconnect it from power. Wait for 45 seconds. Reseat DIMM(s). Reconnect it to power.
4. Make sure that DSA and BIOS/uEFI are at the latest level.

Related links
- IBM Support website
- Latest level of DSA
- Latest level of BMC/IMM

- **201-811-002 : Standalone Memory Test Aborted**

Unable to Locate SMBIOS key "_SM_".

Recoverable
No

Severity
Warning

Serviceable
No

Automatically notify support
No

User Response
Complete the following steps:

1. Perform the actions mentioned one at a time and try the test after each action.
2. If the problem remains, contact your technical-service representative.
3. Turn off the system and disconnect it from power. Wait for 45 seconds. Reseat DIMM(s). Reconnect it to power.
4. Make sure that DSA and BIOS/uEFI are at the latest level.

Related links
- IBM Support website
- Latest level of DSA
- Latest level of BMC/IMM

- **201-811-003 : Standalone Memory Test Aborted**

Unable to Locate SMBIOS key "_SM_".

Recoverable
No

Severity
Warning

Serviceable
No

Automatically notify support
No

User Response
Complete the following steps:

1. Perform the actions mentioned one at a time and try the test after each action.
2. If the problem remains, contact your technical-service representative.
3. Turn off the system and disconnect it from power. Wait for 45 seconds. Reseat DIMM(s). Reconnect it to power.
4. Make sure that DSA and BIOS/uEFI are at the latest level.

Related links
- IBM Support website
- Latest level of DSA
- Latest level of BMC/IMM

- **201-812-000 : Standalone Memory Test Aborted**

Memory test is not supported for this system.

Recoverable
No

Severity
Warning

Serviceable
No

Automatically notify support
No

User Response
Complete the following steps:

1. Perform the actions mentioned one at a time and try the test after each action.
2. If the problem remains, contact your technical-service representative.
3. Turn off the system and disconnect it from power. Wait for 45 seconds. Reseat DIMM(s). Reconnect it to power.
4. Make sure that DSA and BIOS/uEFI are at the latest level.

Related links
- IBM Support website
- Latest level of DSA
- Latest level of BMC/IMM

- **201-812-001 : Standalone Memory Test Aborted**

Memory test is not supported for this system.

Recoverable
No

Severity
Warning

Serviceable
No

Automatically notify support
No

User Response
Complete the following steps:

1. Perform the actions mentioned one at a time and try the test after each action.
2. If the problem remains, contact your technical-service representative.
3. Turn off the system and disconnect it from power. Wait for 45 seconds. Reseat DIMM(s). Reconnect it to power.
4. Make sure that DSA and BIOS/uEFI are at the latest level.

Related links
- IBM Support website
- Latest level of DSA
- Latest level of BMC/IMM

- **201-812-002 : Standalone Memory Test Aborted**

Memory test is not supported for this system.

Recoverable
No

Severity
Warning

Serviceable
No

Automatically notify support
No

User Response

Complete the following steps:

1. Perform the actions mentioned one at a time and try the test after each action.
2. If the problem remains, contact your technical-service representative.
3. Turn off the system and disconnect it from power. Wait for 45 seconds. Reseat DIMM(s). Reconnect it to power.
4. Make sure that DSA and BIOS/uEFI are at the latest level.

Related links

- IBM Support website
- Latest level of DSA
- Latest level of BMC/IMM

- **201-812-003 : Standalone Memory Test Aborted**

Memory test is not supported for this system.

Recoverable

No

Severity

Warning

Serviceable

No

Automatically notify support

No

User Response

Complete the following steps:

1. Perform the actions mentioned one at a time and try the test after each action.
2. If the problem remains, contact your technical-service representative.
3. Turn off the system and disconnect it from power. Wait for 45 seconds. Reseat DIMM(s). Reconnect it to power.
4. Make sure that DSA and BIOS/uEFI are at the latest level.

Related links

- IBM Support website
- Latest level of DSA
- Latest level of BMC/IMM

- **201-813-000 : Standalone Memory Test Aborted**

Chipset Error: Can not turn OFF ECC error reporting in CPU.

Recoverable

No

Severity

Warning

Serviceable

No

Automatically notify support

No

User Response

Complete the following steps:

1. Perform the actions mentioned one at a time and try the test after each action.
2. If the problem remains, contact your technical-service representative.
3. Turn off the system and disconnect it from power. Wait for 45 seconds. Reseat DIMM(s). Reconnect it to power.
4. Make sure that DSA and BIOS/uEFI are at the latest level.

Related links
- IBM Support website
- Latest level of DSA
- Latest level of BMC/IMM

- **201-813-001 : Standalone Memory Test Aborted**

Chipset Error: Can not turn OFF ECC error reporting in CPU.

Recoverable
No

Severity
Warning

Serviceable
No

Automatically notify support
No

User Response
Complete the following steps:

1. Perform the actions mentioned one at a time and try the test after each action.
2. If the problem remains, contact your technical-service representative.
3. Turn off the system and disconnect it from power. Wait for 45 seconds. Reseat DIMM(s). Reconnect it to power.
4. Make sure that DSA and BIOS/uEFI are at the latest level.

Related links
- IBM Support website
- Latest level of DSA
- Latest level of BMC/IMM

- **201-813-002 : Standalone Memory Test Aborted**

Chipset Error: Can not turn OFF ECC error reporting in CPU.

Recoverable
No

Severity
Warning

Serviceable
No

Automatically notify support
No

User Response
Complete the following steps:

1. Perform the actions mentioned one at a time and try the test after each action.

2. If the problem remains, contact your technical-service representative.
3. Turn off the system and disconnect it from power. Wait for 45 seconds. Reseat DIMM(s). Reconnect it to power.
4. Make sure that DSA and BIOS/uEFI are at the latest level.

Related links

- IBM Support website
- Latest level of DSA
- Latest level of BMC/IMM

- **201-813-003 : Standalone Memory Test Aborted**

Chipset Error: Can not turn OFF ECC error reporting in CPU.

Recoverable
No

Severity
Warning

Serviceable
No

Automatically notify support
No

User Response
Complete the following steps:

1. Perform the actions mentioned one at a time and try the test after each action.
2. If the problem remains, contact your technical-service representative.
3. Turn off the system and disconnect it from power. Wait for 45 seconds. Reseat DIMM(s). Reconnect it to power.
4. Make sure that DSA and BIOS/uEFI are at the latest level.

Related links

- IBM Support website
- Latest level of DSA
- Latest level of BMC/IMM

- **201-814-000 : Standalone Memory Test Aborted**

Chipset Error: Can not disable Scubbing feature for CPU.

Recoverable
No

Severity
Warning

Serviceable
No

Automatically notify support
No

User Response
Complete the following steps:

1. Perform the actions mentioned one at a time and try the test after each action.
2. If the problem remains, contact your technical-service representative.

3. Turn off the system and disconnect it from power. Wait for 45 seconds. Reseat DIMM(s). Reconnect it to power.
4. Make sure that DSA and BIOS/uEFI are at the latest level.

Related links
- IBM Support website
- Latest level of DSA
- Latest level of BMC/IMM

- **201-814-001 : Standalone Memory Test Aborted**

Chipset Error: Can not disable Scubbing feature for CPU.

Recoverable
No

Severity
Warning

Serviceable
No

Automatically notify support
No

User Response
Complete the following steps:

1. Perform the actions mentioned one at a time and try the test after each action.
2. If the problem remains, contact your technical-service representative.
3. Turn off the system and disconnect it from power. Wait for 45 seconds. Reseat DIMM(s). Reconnect it to power.
4. Make sure that DSA and BIOS/uEFI are at the latest level.

Related links
- IBM Support website
- Latest level of DSA
- Latest level of BMC/IMM

- **201-814-002 : Standalone Memory Test Aborted**

Chipset Error: Can not disable Scubbing feature for CPU.

Recoverable
No

Severity
Warning

Serviceable
No

Automatically notify support
No

User Response
Complete the following steps:

1. Perform the actions mentioned one at a time and try the test after each action.
2. If the problem remains, contact your technical-service representative.
3. Turn off the system and disconnect it from power. Wait for 45 seconds. Reseat DIMM(s). Reconnect it to power.

4. Make sure that DSA and BIOS/uEFI are at the latest level.

Related links

- IBM Support website
- Latest level of DSA
- Latest level of BMC/IMM

- **201-814-003 : Standalone Memory Test Aborted**

Chipset Error: Can not disable Scubbing feature for CPU.

Recoverable
No

Severity
Warning

Serviceable
No

Automatically notify support
No

User Response
Complete the following steps:

1. Perform the actions mentioned one at a time and try the test after each action.
2. If the problem remains, contact your technical-service representative.
3. Turn off the system and disconnect it from power. Wait for 45 seconds. Reseat DIMM(s). Reconnect it to power.
4. Make sure that DSA and BIOS/uEFI are at the latest level.

Related links

- IBM Support website
- Latest level of DSA
- Latest level of BMC/IMM

- **201-815-000 : Standalone Memory Test Aborted**

Program Error with Quick Memory Menu Option Selection.

Recoverable
No

Severity
Warning

Serviceable
No

Automatically notify support
No

User Response
Complete the following steps:

1. Perform the actions mentioned one at a time and try the test after each action.
2. If the problem remains, contact your technical-service representative.
3. Turn off the system and disconnect it from power. Wait for 45 seconds. Reseat DIMM(s). Reconnect it to power.
4. Make sure that DSA and BIOS/uEFI are at the latest level.

Related links

- IBM Support website
- Latest level of DSA
- Latest level of BMC/IMM

- **201-815-001 : Standalone Memory Test Aborted**

Program Error with Quick Memory Menu Option Selection.

Recoverable
No

Severity
Warning

Serviceable
No

Automatically notify support
No

User Response
Complete the following steps:

1. Perform the actions mentioned one at a time and try the test after each action.
2. If the problem remains, contact your technical-service representative.
3. Turn off the system and disconnect it from power. Wait for 45 seconds. Reseat DIMM(s). Reconnect it to power.
4. Make sure that DSA and BIOS/uEFI are at the latest level.

Related links

- IBM Support website
- Latest level of DSA
- Latest level of BMC/IMM

- **201-815-002 : Standalone Memory Test Aborted**

Program Error with Quick Memory Menu Option Selection.

Recoverable
No

Severity
Warning

Serviceable
No

Automatically notify support
No

User Response
Complete the following steps:

1. Perform the actions mentioned one at a time and try the test after each action.
2. If the problem remains, contact your technical-service representative.
3. Turn off the system and disconnect it from power. Wait for 45 seconds. Reseat DIMM(s). Reconnect it to power.
4. Make sure that DSA and BIOS/uEFI are at the latest level.

Related links

- IBM Support website

- Latest level of DSA
- Latest level of BMC/IMM

- **201-815-003 : Standalone Memory Test Aborted**

  Program Error with Quick Memory Menu Option Selection.

  Recoverable
  No

  Severity
  Warning

  Serviceable
  No

  Automatically notify support
  No

  User Response
  Complete the following steps:

  1. Perform the actions mentioned one at a time and try the test after each action.
  2. If the problem remains, contact your technical-service representative.
  3. Turn off the system and disconnect it from power. Wait for 45 seconds. Reseat DIMM(s). Reconnect it to power.
  4. Make sure that DSA and BIOS/uEFI are at the latest level.

  Related links
  - IBM Support website
  - Latest level of DSA
  - Latest level of BMC/IMM

- **201-816-000 : Standalone Memory Test Aborted**

  Program Error with Full Memory Menu Option Selection.

  Recoverable
  No

  Severity
  Warning

  Serviceable
  No

  Automatically notify support
  No

  User Response
  Complete the following steps:

  1. Perform the actions mentioned one at a time and try the test after each action.
  2. If the problem remains, contact your technical-service representative.
  3. Turn off the system and disconnect it from power. Wait for 45 seconds. Reseat DIMM(s). Reconnect it to power.
  4. Make sure that DSA and BIOS/uEFI are at the latest level.

  Related links
  - IBM Support website
  - Latest level of DSA
  - Latest level of BMC/IMM

- **201-816-001 : Standalone Memory Test Aborted**

  Program Error with Full Memory Menu Option Selection.

  Recoverable
  No

  Severity
  Warning

  Serviceable
  No

  Automatically notify support
  No

  User Response
  Complete the following steps:

  1. Perform the actions mentioned one at a time and try the test after each action.
  2. If the problem remains, contact your technical-service representative.
  3. Turn off the system and disconnect it from power. Wait for 45 seconds. Reseat DIMM(s). Reconnect it to power.
  4. Make sure that DSA and BIOS/uEFI are at the latest level.

  Related links
  - IBM Support website
  - Latest level of DSA
  - Latest level of BMC/IMM
- **201-816-002 : Standalone Memory Test Aborted**

  Program Error with Full Memory Menu Option Selection.

  Recoverable
  No

  Severity
  Warning

  Serviceable
  No

  Automatically notify support
  No

  User Response
  Complete the following steps:

  1. Perform the actions mentioned one at a time and try the test after each action.
  2. If the problem remains, contact your technical-service representative.
  3. Turn off the system and disconnect it from power. Wait for 45 seconds. Reseat DIMM(s). Reconnect it to power.
  4. Make sure that DSA and BIOS/uEFI are at the latest level.

  Related links
  - IBM Support website
  - Latest level of DSA
  - Latest level of BMC/IMM
- **201-816-003 : Standalone Memory Test Aborted**

Program Error with Full Memory Menu Option Selection.

Recoverable
No

Severity
Warning

Serviceable
No

Automatically notify support
No

User Response
Complete the following steps:

1. Perform the actions mentioned one at a time and try the test after each action.
2. If the problem remains, contact your technical-service representative.
3. Turn off the system and disconnect it from power. Wait for 45 seconds. Reseat DIMM(s). Reconnect it to power.
4. Make sure that DSA and BIOS/uEFI are at the latest level.

Related links
- IBM Support website
- Latest level of DSA
- Latest level of BMC/IMM

- **201-818-000 : Standalone Memory Test Aborted**

Unable to Locate SMBIOS key "_SM_".

Recoverable
No

Severity
Warning

Serviceable
No

Automatically notify support
No

User Response
Complete the following steps:

1. Perform the actions mentioned one at a time and try the test after each action.
2. If the problem remains, contact your technical-service representative.
3. Turn off the system and disconnect it from power. Wait for 45 seconds. Reseat DIMM(s). Reconnect it to power.
4. Make sure that DSA and BIOS/uEFI are at the latest level.

Related links
- IBM Support website
- Latest level of DSA
- Latest level of BMC/IMM

- **201-818-001 : Standalone Memory Test Aborted**

Unable to Locate SMBIOS key "_SM_".

Recoverable
No

Severity
Warning

Serviceable
No

Automatically notify support
No

User Response
Complete the following steps:

1. Perform the actions mentioned one at a time and try the test after each action.
2. If the problem remains, contact your technical-service representative.
3. Turn off the system and disconnect it from power. Wait for 45 seconds. Reseat DIMM(s). Reconnect it to power.
4. Make sure that DSA and BIOS/uEFI are at the latest level.

Related links
- IBM Support website
- Latest level of DSA
- Latest level of BMC/IMM

- **201-818-002 : Standalone Memory Test Aborted**

Unable to Locate SMBIOS key "_SM_".

Recoverable
No

Severity
Warning

Serviceable
No

Automatically notify support
No

User Response
Complete the following steps:

1. Perform the actions mentioned one at a time and try the test after each action.
2. If the problem remains, contact your technical-service representative.
3. Turn off the system and disconnect it from power. Wait for 45 seconds. Reseat DIMM(s). Reconnect it to power.
4. Make sure that DSA and BIOS/uEFI are at the latest level.

Related links
- IBM Support website
- Latest level of DSA
- Latest level of BMC/IMM

- **201-818-003 : Standalone Memory Test Aborted**

Unable to Locate SMBIOS key "_SM_".

Recoverable
No

Severity
Warning

Serviceable
No

Automatically notify support
No

User Response
Complete the following steps:

1. Perform the actions mentioned one at a time and try the test after each action.
2. If the problem remains, contact your technical-service representative.
3. Turn off the system and disconnect it from power. Wait for 45 seconds. Reseat DIMM(s). Reconnect it to power.
4. Make sure that DSA and BIOS/uEFI are at the latest level.

Related links
- IBM Support website
- Latest level of DSA
- Latest level of BMC/IMM

- **201-819-000 : Standalone Memory Test Aborted**

The start-end address ranges in the restricted area of the memory.

Recoverable
No

Severity
Warning

Serviceable
No

Automatically notify support
No

User Response
Complete the following steps:

1. Perform the actions mentioned one at a time and try the test after each action.
2. If the problem remains, contact your technical-service representative.
3. Turn off the system and disconnect it from power. Wait for 45 seconds. Reseat DIMM(s). Reconnect it to power.
4. Make sure that DSA and BIOS/uEFI are at the latest level.

Related links
- IBM Support website
- Latest level of DSA
- Latest level of BMC/IMM

- **201-819-001 : Standalone Memory Test Aborted**

The start-end address ranges in the restricted area of the memory.

Recoverable
No

Severity
Warning

Serviceable
No

Automatically notify support
No

User Response
Complete the following steps:

1. Perform the actions mentioned one at a time and try the test after each action.
2. If the problem remains, contact your technical-service representative.
3. Turn off the system and disconnect it from power. Wait for 45 seconds. Reseat DIMM(s). Reconnect it to power.
4. Make sure that DSA and BIOS/uEFI are at the latest level.

Related links
- IBM Support website
- Latest level of DSA
- Latest level of BMC/IMM

- **201-819-002 : Standalone Memory Test Aborted**

The start-end address ranges in the restricted area of the memory.

Recoverable
No

Severity
Warning

Serviceable
No

Automatically notify support
No

User Response
Complete the following steps:

1. Perform the actions mentioned one at a time and try the test after each action.
2. If the problem remains, contact your technical-service representative.
3. Turn off the system and disconnect it from power. Wait for 45 seconds. Reseat DIMM(s). Reconnect it to power.
4. Make sure that DSA and BIOS/uEFI are at the latest level.

Related links
- IBM Support website
- Latest level of DSA
- Latest level of BMC/IMM

- **201-819-003 : Standalone Memory Test Aborted**

The start-end address ranges in the restricted area of the memory.

Recoverable
No

Severity
Warning

Serviceable
No

Automatically notify support
No

User Response
Complete the following steps:

1. Perform the actions mentioned one at a time and try the test after each action.
2. If the problem remains, contact your technical-service representative.
3. Turn off the system and disconnect it from power. Wait for 45 seconds. Reseat DIMM(s). Reconnect it to power.
4. Make sure that DSA and BIOS/uEFI are at the latest level.

Related links
- IBM Support website
- Latest level of DSA
- Latest level of BMC/IMM

- **201-820-000 : Standalone Memory Test Aborted**

Memory Upper limit is less than 16 Mbytes.

Recoverable
No

Severity
Warning

Serviceable
No

Automatically notify support
No

User Response
Complete the following steps:

1. Perform the actions mentioned one at a time and try the test after each action.
2. If the problem remains, contact your technical-service representative.
3. Turn off the system and disconnect it from power. Wait for 45 seconds. Reseat DIMM(s). Reconnect it to power.
4. Make sure that DSA and BIOS/uEFI are at the latest level.

Related links
- IBM Support website
- Latest level of DSA
- Latest level of BMC/IMM

- **201-820-001 : Standalone Memory Test Aborted**

Memory Upper limit is less than 16 Mbytes.

Recoverable
No

Severity
Warning

Serviceable
No

Automatically notify support
No

User Response

Complete the following steps:

1. Perform the actions mentioned one at a time and try the test after each action.
2. If the problem remains, contact your technical-service representative.
3. Turn off the system and disconnect it from power. Wait for 45 seconds. Reseat DIMM(s). Reconnect it to power.
4. Make sure that DSA and BIOS/uEFI are at the latest level.

Related links

- IBM Support website
- Latest level of DSA
- Latest level of BMC/IMM

- **201-820-002 : Standalone Memory Test Aborted**

Memory Upper limit is less than 16 Mbytes.

Recoverable

No

Severity

Warning

Serviceable

No

Automatically notify support

No

User Response

Complete the following steps:

1. Perform the actions mentioned one at a time and try the test after each action.
2. If the problem remains, contact your technical-service representative.
3. Turn off the system and disconnect it from power. Wait for 45 seconds. Reseat DIMM(s). Reconnect it to power.
4. Make sure that DSA and BIOS/uEFI are at the latest level.

Related links

- IBM Support website
- Latest level of DSA
- Latest level of BMC/IMM

- **201-820-003 : Standalone Memory Test Aborted**

Memory Upper limit is less than 16 Mbytes.

Recoverable

No

Severity

Warning

Serviceable

No

Automatically notify support

No

User Response

Complete the following steps:

1. Perform the actions mentioned one at a time and try the test after each action.
2. If the problem remains, contact your technical-service representative.
3. Turn off the system and disconnect it from power. Wait for 45 seconds. Reseat DIMM(s). Reconnect it to power.
4. Make sure that DSA and BIOS/uEFI are at the latest level.

Related links
- IBM Support website
- Latest level of DSA
- Latest level of BMC/IMM

- **201-821-000 : Standalone Memory Test Aborted**

Variable range MTRR registers are larger than fixed range MTRR registers.

Recoverable
No

Severity
Warning

Serviceable
No

Automatically notify support
No

User Response
Complete the following steps:

1. Perform the actions mentioned one at a time and try the test after each action.
2. If the problem remains, contact your technical-service representative.
3. Turn off the system and disconnect it from power. Wait for 45 seconds. Reseat DIMM(s). Reconnect it to power.
4. Make sure that DSA and BIOS/uEFI are at the latest level.

Related links
- IBM Support website
- Latest level of DSA
- Latest level of BMC/IMM

- **201-821-001 : Standalone Memory Test Aborted**

Variable range MTRR registers are larger than fixed range MTRR registers.

Recoverable
No

Severity
Warning

Serviceable
No

Automatically notify support
No

User Response
Complete the following steps:

1. Perform the actions mentioned one at a time and try the test after each action.

2. If the problem remains, contact your technical-service representative.
3. Turn off the system and disconnect it from power. Wait for 45 seconds. Reseat DIMM(s). Reconnect it to power.
4. Make sure that DSA and BIOS/uEFI are at the latest level.

Related links

- IBM Support website
- Latest level of DSA
- Latest level of BMC/IMM

- **201-821-002 : Standalone Memory Test Aborted**

Variable range MTRR registers are larger than fixed range MTRR registers.

Recoverable
No

Severity
Warning

Serviceable
No

Automatically notify support
No

User Response
Complete the following steps:

1. Perform the actions mentioned one at a time and try the test after each action.
2. If the problem remains, contact your technical-service representative.
3. Turn off the system and disconnect it from power. Wait for 45 seconds. Reseat DIMM(s). Reconnect it to power.
4. Make sure that DSA and BIOS/uEFI are at the latest level.

Related links

- IBM Support website
- Latest level of DSA
- Latest level of BMC/IMM

- **201-821-003 : Standalone Memory Test Aborted**

Variable range MTRR registers are larger than fixed range MTRR registers.

Recoverable
No

Severity
Warning

Serviceable
No

Automatically notify support
No

User Response
Complete the following steps:

1. Perform the actions mentioned one at a time and try the test after each action.
2. If the problem remains, contact your technical-service representative.

3. Turn off the system and disconnect it from power. Wait for 45 seconds. Reseat DIMM(s). Reconnect it to power.
4. Make sure that DSA and BIOS/uEFI are at the latest level.

Related links
- IBM Support website
- Latest level of DSA
- Latest level of BMC/IMM

- **201-822-000 : Standalone Memory Test Aborted**

Invalid MTRR service request.

Recoverable
No

Severity
Warning

Serviceable
No

Automatically notify support
No

User Response
Complete the following steps:

1. Perform the actions mentioned one at a time and try the test after each action.
2. If the problem remains, contact your technical-service representative.
3. Turn off the system and disconnect it from power. Wait for 45 seconds. Reseat DIMM(s). Reconnect it to power.
4. Make sure that DSA and BIOS/uEFI are at the latest level.

Related links
- IBM Support website
- Latest level of DSA
- Latest level of BMC/IMM

- **201-822-001 : Standalone Memory Test Aborted**

Invalid MTRR service request.

Recoverable
No

Severity
Warning

Serviceable
No

Automatically notify support
No

User Response
Complete the following steps:

1. Perform the actions mentioned one at a time and try the test after each action.
2. If the problem remains, contact your technical-service representative.
3. Turn off the system and disconnect it from power. Wait for 45 seconds. Reseat DIMM(s). Reconnect it to power.

4. Make sure that DSA and BIOS/uEFI are at the latest level.

Related links

- IBM Support website
- Latest level of DSA
- Latest level of BMC/IMM

- **201-822-002 : Standalone Memory Test Aborted**

Invalid MTRR service request.

Recoverable
No

Severity
Warning

Serviceable
No

Automatically notify support
No

User Response
Complete the following steps:

1. Perform the actions mentioned one at a time and try the test after each action.
2. If the problem remains, contact your technical-service representative.
3. Turn off the system and disconnect it from power. Wait for 45 seconds. Reseat DIMM(s). Reconnect it to power.
4. Make sure that DSA and BIOS/uEFI are at the latest level.

Related links

- IBM Support website
- Latest level of DSA
- Latest level of BMC/IMM

- **201-822-003 : Standalone Memory Test Aborted**

Invalid MTRR service request.

Recoverable
No

Severity
Warning

Serviceable
No

Automatically notify support
No

User Response
Complete the following steps:

1. Perform the actions mentioned one at a time and try the test after each action.
2. If the problem remains, contact your technical-service representative.
3. Turn off the system and disconnect it from power. Wait for 45 seconds. Reseat DIMM(s). Reconnect it to power.
4. Make sure that DSA and BIOS/uEFI are at the latest level.

Related links

- IBM Support website
- Latest level of DSA
- Latest level of BMC/IMM

- **201-824-000 : Standalone Memory Test Aborted**

Node Interleave feature must be OFF. Go to Setup and disable Node Interleave option and then re-run the test.

Recoverable
No

Severity
Warning

Serviceable
No

Automatically notify support
No

User Response
Complete the following steps:

1. Perform the actions mentioned one at a time and try the test after each action.
2. If the problem remains, contact your technical-service representative.
3. Turn off the system and disconnect it from power. Wait for 45 seconds. Reseat DIMM(s). Reconnect it to power.
4. Make sure that DSA and BIOS/uEFI are at the latest level.

Related links

- IBM Support website
- Latest level of DSA
- Latest level of BMC/IMM

- **201-824-001 : Standalone Memory Test Aborted**

Node Interleave feature must be OFF. Go to Setup and disable Node Interleave option and then re-run the test.

Recoverable
No

Severity
Warning

Serviceable
No

Automatically notify support
No

User Response
Complete the following steps:

1. Perform the actions mentioned one at a time and try the test after each action.
2. If the problem remains, contact your technical-service representative.
3. Turn off the system and disconnect it from power. Wait for 45 seconds. Reseat DIMM(s). Reconnect it to power.
4. Make sure that DSA and BIOS/uEFI are at the latest level.

Related links

- IBM Support website
- Latest level of DSA
- Latest level of BMC/IMM

- **201-824-002 : Standalone Memory Test Aborted**

Node Interleave feature must be OFF. Go to Setup and disable Node Interleave option and then re-run the test.

Recoverable
No

Severity
Warning

Serviceable
No

Automatically notify support
No

User Response
Complete the following steps:

1. Perform the actions mentioned one at a time and try the test after each action.
2. If the problem remains, contact your technical-service representative.
3. Turn off the system and disconnect it from power. Wait for 45 seconds. Reseat DIMM(s). Reconnect it to power.
4. Make sure that DSA and BIOS/uEFI are at the latest level.

Related links

- IBM Support website
- Latest level of DSA
- Latest level of BMC/IMM

- **201-824-003 : Standalone Memory Test Aborted**

Node Interleave feature must be OFF. Go to Setup and disable Node Interleave option and then re-run the test.

Recoverable
No

Severity
Warning

Serviceable
No

Automatically notify support
No

User Response
Complete the following steps:

1. Perform the actions mentioned one at a time and try the test after each action.
2. If the problem remains, contact your technical-service representative.
3. Turn off the system and disconnect it from power. Wait for 45 seconds. Reseat DIMM(s). Reconnect it to power.
4. Make sure that DSA and BIOS/uEFI are at the latest level.

Related links
- IBM Support website
- Latest level of DSA
- Latest level of BMC/IMM

- **201-826-000 : Standalone Memory Test Aborted**

BIOS: Memory Controller has been disabled. Go to Setup and Enable Memory Controller.

Recoverable
No

Severity
Warning

Serviceable
No

Automatically notify support
No

User Response
Complete the following steps:

1. Perform the actions mentioned one at a time and try the test after each action.
2. If the problem remains, contact your technical-service representative.
3. Turn off the system and disconnect it from power. Wait for 45 seconds. Reseat DIMM(s). Reconnect it to power.
4. Make sure that DSA and BIOS/uEFI are at the latest level.

Related links
- IBM Support website
- Latest level of DSA
- Latest level of BMC/IMM

- **201-826-001 : Standalone Memory Test Aborted**

BIOS: Memory Controller has been disabled. Go to Setup and Enable Memory Controller.

Recoverable
No

Severity
Warning

Serviceable
No

Automatically notify support
No

User Response
Complete the following steps:

1. Perform the actions mentioned one at a time and try the test after each action.
2. If the problem remains, contact your technical-service representative.
3. Turn off the system and disconnect it from power. Wait for 45 seconds. Reseat DIMM(s). Reconnect it to power.
4. Make sure that DSA and BIOS/uEFI are at the latest level.

Related links
- IBM Support website

- Latest level of DSA
- Latest level of BMC/IMM

- **201-826-002 : Standalone Memory Test Aborted**

  BIOS: Memory Controller has been disabled. Go to Setup and Enable Memory Controller.

  Recoverable
  No

  Severity
  Warning

  Serviceable
  No

  Automatically notify support
  No

  User Response
  Complete the following steps:

  1. Perform the actions mentioned one at a time and try the test after each action.
  2. If the problem remains, contact your technical-service representative.
  3. Turn off the system and disconnect it from power. Wait for 45 seconds. Reseat DIMM(s). Reconnect it to power.
  4. Make sure that DSA and BIOS/uEFI are at the latest level.

  Related links
  - IBM Support website
  - Latest level of DSA
  - Latest level of BMC/IMM

- **201-826-003 : Standalone Memory Test Aborted**

  BIOS: Memory Controller has been disabled. Go to Setup and Enable Memory Controller.

  Recoverable
  No

  Severity
  Warning

  Serviceable
  No

  Automatically notify support
  No

  User Response
  Complete the following steps:

  1. Perform the actions mentioned one at a time and try the test after each action.
  2. If the problem remains, contact your technical-service representative.
  3. Turn off the system and disconnect it from power. Wait for 45 seconds. Reseat DIMM(s). Reconnect it to power.
  4. Make sure that DSA and BIOS/uEFI are at the latest level.

  Related links
  - IBM Support website
  - Latest level of DSA
  - Latest level of BMC/IMM

- **201-827-000 : Standalone Memory Test Aborted**

  BIOS: ECC function has been disabled by BIOS. Go to Setup and enable ECC generation.

  Recoverable
  No

  Severity
  Warning

  Serviceable
  No

  Automatically notify support
  No

  User Response
  Complete the following steps:

  1. Perform the actions mentioned one at a time and try the test after each action.
  2. If the problem remains, contact your technical-service representative.
  3. Turn off the system and disconnect it from power. Wait for 45 seconds. Reseat DIMM(s). Reconnect it to power.
  4. Make sure that DSA and BIOS/uEFI are at the latest level.

  Related links
  - IBM Support website
  - Latest level of DSA
  - Latest level of BMC/IMM
- **201-827-001 : Standalone Memory Test Aborted**

  BIOS: ECC function has been disabled by BIOS. Go to Setup and enable ECC generation.

  Recoverable
  No

  Severity
  Warning

  Serviceable
  No

  Automatically notify support
  No

  User Response
  Complete the following steps:

  1. Perform the actions mentioned one at a time and try the test after each action.
  2. If the problem remains, contact your technical-service representative.
  3. Turn off the system and disconnect it from power. Wait for 45 seconds. Reseat DIMM(s). Reconnect it to power.
  4. Make sure that DSA and BIOS/uEFI are at the latest level.

  Related links
  - IBM Support website
  - Latest level of DSA
  - Latest level of BMC/IMM
- **201-827-002 : Standalone Memory Test Aborted**

BIOS: ECC function has been disabled by BIOS. Go to Setup and enable ECC generation.

Recoverable
No

Severity
Warning

Serviceable
No

Automatically notify support
No

User Response
Complete the following steps:

1. Perform the actions mentioned one at a time and try the test after each action.
2. If the problem remains, contact your technical-service representative.
3. Turn off the system and disconnect it from power. Wait for 45 seconds. Reseat DIMM(s). Reconnect it to power.
4. Make sure that DSA and BIOS/uEFI are at the latest level.

Related links
- IBM Support website
- Latest level of DSA
- Latest level of BMC/IMM

- **201-827-003 : Standalone Memory Test Aborted**

BIOS: ECC function has been disabled by BIOS. Go to Setup and enable ECC generation.

Recoverable
No

Severity
Warning

Serviceable
No

Automatically notify support
No

User Response
Complete the following steps:

1. Perform the actions mentioned one at a time and try the test after each action.
2. If the problem remains, contact your technical-service representative.
3. Turn off the system and disconnect it from power. Wait for 45 seconds. Reseat DIMM(s). Reconnect it to power.
4. Make sure that DSA and BIOS/uEFI are at the latest level.

Related links
- IBM Support website
- Latest level of DSA
- Latest level of BMC/IMM

- **201-844-000 : Standalone Memory Test Aborted**

Chipset Error: Problem in masking MSR machine check control MASK registers.

Recoverable
No

Severity
Warning

Serviceable
No

Automatically notify support
No

User Response
Complete the following steps:

1. Perform the actions mentioned one at a time and try the test after each action.
2. If the problem remains, contact your technical-service representative.
3. Turn off the system and disconnect it from power. Wait for 45 seconds. Reseat DIMM(s). Reconnect it to power.
4. Make sure that DSA and BIOS/uEFI are at the latest level.

Related links
- IBM Support website
- Latest level of DSA
- Latest level of BMC/IMM

- **201-844-001 : Standalone Memory Test Aborted**

Chipset Error: Problem in masking MSR machine check control MASK registers.

Recoverable
No

Severity
Warning

Serviceable
No

Automatically notify support
No

User Response
Complete the following steps:

1. Perform the actions mentioned one at a time and try the test after each action.
2. If the problem remains, contact your technical-service representative.
3. Turn off the system and disconnect it from power. Wait for 45 seconds. Reseat DIMM(s). Reconnect it to power.
4. Make sure that DSA and BIOS/uEFI are at the latest level.

Related links
- IBM Support website
- Latest level of DSA
- Latest level of BMC/IMM

- **201-844-002 : Standalone Memory Test Aborted**

Chipset Error: Problem in masking MSR machine check control MASK registers.

Recoverable
No

Severity
Warning

Serviceable
No

Automatically notify support
No

User Response
Complete the following steps:

1. Perform the actions mentioned one at a time and try the test after each action.
2. If the problem remains, contact your technical-service representative.
3. Turn off the system and disconnect it from power. Wait for 45 seconds. Reseat DIMM(s). Reconnect it to power.
4. Make sure that DSA and BIOS/uEFI are at the latest level.

Related links
- IBM Support website
- Latest level of DSA
- Latest level of BMC/IMM

- **201-844-003 : Standalone Memory Test Aborted**

Chipset Error: Problem in masking MSR machine check control MASK registers.

Recoverable
No

Severity
Warning

Serviceable
No

Automatically notify support
No

User Response
Complete the following steps:

1. Perform the actions mentioned one at a time and try the test after each action.
2. If the problem remains, contact your technical-service representative.
3. Turn off the system and disconnect it from power. Wait for 45 seconds. Reseat DIMM(s). Reconnect it to power.
4. Make sure that DSA and BIOS/uEFI are at the latest level.

Related links
- IBM Support website
- Latest level of DSA
- Latest level of BMC/IMM

- **201-845-000 : Standalone Memory Test Aborted**

Chipset Error: Problem clearing MSR machine check control registers.

Recoverable
No

Severity
Warning

Serviceable
No

Automatically notify support
No

User Response
Complete the following steps:

1. Perform the actions mentioned one at a time and try the test after each action.
2. If the problem remains, contact your technical-service representative.
3. Turn off the system and disconnect it from power. Wait for 45 seconds. Reseat DIMM(s). Reconnect it to power.
4. Make sure that DSA and BIOS/uEFI are at the latest level.

Related links
- IBM Support website
- Latest level of DSA
- Latest level of BMC/IMM

- **201-845-001 : Standalone Memory Test Aborted**

Chipset Error: Problem clearing MSR machine check control registers.

Recoverable
No

Severity
Warning

Serviceable
No

Automatically notify support
No

User Response
Complete the following steps:

1. Perform the actions mentioned one at a time and try the test after each action.
2. If the problem remains, contact your technical-service representative.
3. Turn off the system and disconnect it from power. Wait for 45 seconds. Reseat DIMM(s). Reconnect it to power.
4. Make sure that DSA and BIOS/uEFI are at the latest level.

Related links
- IBM Support website
- Latest level of DSA
- Latest level of BMC/IMM

- **201-845-002 : Standalone Memory Test Aborted**

Chipset Error: Problem clearing MSR machine check control registers.

Recoverable
No

Severity
Warning

Serviceable
No

Automatically notify support
No

User Response
Complete the following steps:

1. Perform the actions mentioned one at a time and try the test after each action.
2. If the problem remains, contact your technical-service representative.
3. Turn off the system and disconnect it from power. Wait for 45 seconds. Reseat DIMM(s). Reconnect it to power.
4. Make sure that DSA and BIOS/uEFI are at the latest level.

Related links
- IBM Support website
- Latest level of DSA
- Latest level of BMC/IMM

- **201-845-003 : Standalone Memory Test Aborted**

Chipset Error: Problem clearing MSR machine check control registers.

Recoverable
No

Severity
Warning

Serviceable
No

Automatically notify support
No

User Response
Complete the following steps:

1. Perform the actions mentioned one at a time and try the test after each action.
2. If the problem remains, contact your technical-service representative.
3. Turn off the system and disconnect it from power. Wait for 45 seconds. Reseat DIMM(s). Reconnect it to power.
4. Make sure that DSA and BIOS/uEFI are at the latest level.

Related links
- IBM Support website
- Latest level of DSA
- Latest level of BMC/IMM

- **201-859-000 : Standalone Memory Test Aborted**

INVALID XSECSRAT type.

Recoverable
No

Severity
Warning

Serviceable
No

Automatically notify support
No

User Response

Complete the following steps:

1. Perform the actions mentioned one at a time and try the test after each action.
2. If the problem remains, contact your technical-service representative.
3. Turn off the system and disconnect it from power. Wait for 45 seconds. Reseat DIMM(s). Reconnect it to power.
4. Make sure that DSA and BIOS/uEFI are at the latest level.

Related links

- IBM Support website
- Latest level of DSA
- Latest level of BMC/IMM

- **201-859-001 : Standalone Memory Test Aborted**

INVALID XSECSRAT type.

Recoverable

No

Severity

Warning

Serviceable

No

Automatically notify support

No

User Response

Complete the following steps:

1. Perform the actions mentioned one at a time and try the test after each action.
2. If the problem remains, contact your technical-service representative.
3. Turn off the system and disconnect it from power. Wait for 45 seconds. Reseat DIMM(s). Reconnect it to power.
4. Make sure that DSA and BIOS/uEFI are at the latest level.

Related links

- IBM Support website
- Latest level of DSA
- Latest level of BMC/IMM

- **201-859-002 : Standalone Memory Test Aborted**

INVALID XSECSRAT type.

Recoverable

No

Severity

Warning

Serviceable

No

Automatically notify support

No

User Response

Complete the following steps:

1. Perform the actions mentioned one at a time and try the test after each action.
2. If the problem remains, contact your technical-service representative.
3. Turn off the system and disconnect it from power. Wait for 45 seconds. Reseat DIMM(s). Reconnect it to power.
4. Make sure that DSA and BIOS/uEFI are at the latest level.

Related links
- IBM Support website
- Latest level of DSA
- Latest level of BMC/IMM

- **201-859-003 : Standalone Memory Test Aborted**

INVALID XSECSRAT type.

Recoverable
No

Severity
Warning

Serviceable
No

Automatically notify support
No

User Response
Complete the following steps:

1. Perform the actions mentioned one at a time and try the test after each action.
2. If the problem remains, contact your technical-service representative.
3. Turn off the system and disconnect it from power. Wait for 45 seconds. Reseat DIMM(s). Reconnect it to power.
4. Make sure that DSA and BIOS/uEFI are at the latest level.

Related links
- IBM Support website
- Latest level of DSA
- Latest level of BMC/IMM

- **201-860-000 : Standalone Memory Test Aborted**

No OEM0 type 1 found.

Recoverable
No

Severity
Warning

Serviceable
No

Automatically notify support
No

User Response
Complete the following steps:

1. Perform the actions mentioned one at a time and try the test after each action.

2. If the problem remains, contact your technical-service representative.
3. Turn off the system and disconnect it from power. Wait for 45 seconds. Reseat DIMM(s). Reconnect it to power.
4. Make sure that DSA and BIOS/uEFI are at the latest level.

Related links

- IBM Support website
- Latest level of DSA
- Latest level of BMC/IMM

- **201-860-001 : Standalone Memory Test Aborted**

No OEM0 type 1 found.

Recoverable
No

Severity
Warning

Serviceable
No

Automatically notify support
No

User Response
Complete the following steps:

1. Perform the actions mentioned one at a time and try the test after each action.
2. If the problem remains, contact your technical-service representative.
3. Turn off the system and disconnect it from power. Wait for 45 seconds. Reseat DIMM(s). Reconnect it to power.
4. Make sure that DSA and BIOS/uEFI are at the latest level.

Related links

- IBM Support website
- Latest level of DSA
- Latest level of BMC/IMM

- **201-860-002 : Standalone Memory Test Aborted**

No OEM0 type 1 found.

Recoverable
No

Severity
Warning

Serviceable
No

Automatically notify support
No

User Response
Complete the following steps:

1. Perform the actions mentioned one at a time and try the test after each action.
2. If the problem remains, contact your technical-service representative.

3. Turn off the system and disconnect it from power. Wait for 45 seconds. Reseat DIMM(s). Reconnect it to power.
4. Make sure that DSA and BIOS/uEFI are at the latest level.

Related links
- IBM Support website
- Latest level of DSA
- Latest level of BMC/IMM

- **201-860-003 : Standalone Memory Test Aborted**

No OEM0 type 1 found.

Recoverable
No

Severity
Warning

Serviceable
No

Automatically notify support
No

User Response
Complete the following steps:

1. Perform the actions mentioned one at a time and try the test after each action.
2. If the problem remains, contact your technical-service representative.
3. Turn off the system and disconnect it from power. Wait for 45 seconds. Reseat DIMM(s). Reconnect it to power.
4. Make sure that DSA and BIOS/uEFI are at the latest level.

Related links
- IBM Support website
- Latest level of DSA
- Latest level of BMC/IMM

- **201-861-000 : Standalone Memory Test Aborted**

No SRAT type 1 found.

Recoverable
No

Severity
Warning

Serviceable
No

Automatically notify support
No

User Response
Complete the following steps:

1. Perform the actions mentioned one at a time and try the test after each action.
2. If the problem remains, contact your technical-service representative.
3. Turn off the system and disconnect it from power. Wait for 45 seconds. Reseat DIMM(s). Reconnect it to power.

4. Make sure that DSA and BIOS/uEFI are at the latest level.

Related links

- IBM Support website
- Latest level of DSA
- Latest level of BMC/IMM

- **201-861-001 : Standalone Memory Test Aborted**

No SRAT type 1 found.

Recoverable
No

Severity
Warning

Serviceable
No

Automatically notify support
No

User Response
Complete the following steps:

1. Perform the actions mentioned one at a time and try the test after each action.
2. If the problem remains, contact your technical-service representative.
3. Turn off the system and disconnect it from power. Wait for 45 seconds. Reseat DIMM(s). Reconnect it to power.
4. Make sure that DSA and BIOS/uEFI are at the latest level.

Related links

- IBM Support website
- Latest level of DSA
- Latest level of BMC/IMM

- **201-861-002 : Standalone Memory Test Aborted**

No SRAT type 1 found.

Recoverable
No

Severity
Warning

Serviceable
No

Automatically notify support
No

User Response
Complete the following steps:

1. Perform the actions mentioned one at a time and try the test after each action.
2. If the problem remains, contact your technical-service representative.
3. Turn off the system and disconnect it from power. Wait for 45 seconds. Reseat DIMM(s). Reconnect it to power.
4. Make sure that DSA and BIOS/uEFI are at the latest level.

Related links

- IBM Support website
- Latest level of DSA
- Latest level of BMC/IMM

- **201-861-003 : Standalone Memory Test Aborted**

No SRAT type 1 found.

Recoverable
No

Severity
Warning

Serviceable
No

Automatically notify support
No

User Response
Complete the following steps:

1. Perform the actions mentioned one at a time and try the test after each action.
2. If the problem remains, contact your technical-service representative.
3. Turn off the system and disconnect it from power. Wait for 45 seconds. Reseat DIMM(s). Reconnect it to power.
4. Make sure that DSA and BIOS/uEFI are at the latest level.

Related links

- IBM Support website
- Latest level of DSA
- Latest level of BMC/IMM

- **201-862-000 : Standalone Memory Test Aborted**

No OEM1 structure found.

Recoverable
No

Severity
Warning

Serviceable
No

Automatically notify support
No

User Response
Complete the following steps:

1. Perform the actions mentioned one at a time and try the test after each action.
2. If the problem remains, contact your technical-service representative.
3. Turn off the system and disconnect it from power. Wait for 45 seconds. Reseat DIMM(s). Reconnect it to power.
4. Make sure that DSA and BIOS/uEFI are at the latest level.

Related links

- IBM Support website

- Latest level of DSA
- Latest level of BMC/IMM

- **201-862-001 : Standalone Memory Test Aborted**

No OEM1 structure found.

Recoverable
No

Severity
Warning

Serviceable
No

Automatically notify support
No

User Response
Complete the following steps:

1. Perform the actions mentioned one at a time and try the test after each action.
2. If the problem remains, contact your technical-service representative.
3. Turn off the system and disconnect it from power. Wait for 45 seconds. Reseat DIMM(s). Reconnect it to power.
4. Make sure that DSA and BIOS/uEFI are at the latest level.

Related links
- IBM Support website
- Latest level of DSA
- Latest level of BMC/IMM

- **201-862-002 : Standalone Memory Test Aborted**

No OEM1 structure found.

Recoverable
No

Severity
Warning

Serviceable
No

Automatically notify support
No

User Response
Complete the following steps:

1. Perform the actions mentioned one at a time and try the test after each action.
2. If the problem remains, contact your technical-service representative.
3. Turn off the system and disconnect it from power. Wait for 45 seconds. Reseat DIMM(s). Reconnect it to power.
4. Make sure that DSA and BIOS/uEFI are at the latest level.

Related links
- IBM Support website
- Latest level of DSA
- Latest level of BMC/IMM

- **201-862-003 : Standalone Memory Test Aborted**

  No OEM1 structure found.

  Recoverable
  No

  Severity
  Warning

  Serviceable
  No

  Automatically notify support
  No

  User Response
  Complete the following steps:

  1. Perform the actions mentioned one at a time and try the test after each action.
  2. If the problem remains, contact your technical-service representative.
  3. Turn off the system and disconnect it from power. Wait for 45 seconds. Reseat DIMM(s). Reconnect it to power.
  4. Make sure that DSA and BIOS/uEFI are at the latest level.

  Related links
  - IBM Support website
  - Latest level of DSA
  - Latest level of BMC/IMM
- **201-863-000 : Standalone Memory Test Aborted**

  No IBMERROR key in OEM1 structure.

  Recoverable
  No

  Severity
  Warning

  Serviceable
  No

  Automatically notify support
  No

  User Response
  Complete the following steps:

  1. Perform the actions mentioned one at a time and try the test after each action.
  2. If the problem remains, contact your technical-service representative.
  3. Turn off the system and disconnect it from power. Wait for 45 seconds. Reseat DIMM(s). Reconnect it to power.
  4. Make sure that DSA and BIOS/uEFI are at the latest level.

  Related links
  - IBM Support website
  - Latest level of DSA
  - Latest level of BMC/IMM
- **201-863-001 : Standalone Memory Test Aborted**

No IBMERROR key in OEM1 structure.

Recoverable
No

Severity
Warning

Serviceable
No

Automatically notify support
No

User Response
Complete the following steps:

1. Perform the actions mentioned one at a time and try the test after each action.
2. If the problem remains, contact your technical-service representative.
3. Turn off the system and disconnect it from power. Wait for 45 seconds. Reseat DIMM(s). Reconnect it to power.
4. Make sure that DSA and BIOS/uEFI are at the latest level.

Related links
- IBM Support website
- Latest level of DSA
- Latest level of BMC/IMM

- **201-863-002 : Standalone Memory Test Aborted**

No IBMERROR key in OEM1 structure.

Recoverable
No

Severity
Warning

Serviceable
No

Automatically notify support
No

User Response
Complete the following steps:

1. Perform the actions mentioned one at a time and try the test after each action.
2. If the problem remains, contact your technical-service representative.
3. Turn off the system and disconnect it from power. Wait for 45 seconds. Reseat DIMM(s). Reconnect it to power.
4. Make sure that DSA and BIOS/uEFI are at the latest level.

Related links
- IBM Support website
- Latest level of DSA
- Latest level of BMC/IMM

- **201-863-003 : Standalone Memory Test Aborted**

No IBMERROR key in OEM1 structure.

Recoverable
No

Severity
Warning

Serviceable
No

Automatically notify support
No

User Response
Complete the following steps:

1. Perform the actions mentioned one at a time and try the test after each action.
2. If the problem remains, contact your technical-service representative.
3. Turn off the system and disconnect it from power. Wait for 45 seconds. Reseat DIMM(s). Reconnect it to power.
4. Make sure that DSA and BIOS/uEFI are at the latest level.

Related links
- IBM Support website
- Latest level of DSA
- Latest level of BMC/IMM

- **201-864-000 : Standalone Memory Test Aborted**

No GAS located in OEM1.

Recoverable
No

Severity
Warning

Serviceable
No

Automatically notify support
No

User Response
Complete the following steps:

1. Perform the actions mentioned one at a time and try the test after each action.
2. If the problem remains, contact your technical-service representative.
3. Turn off the system and disconnect it from power. Wait for 45 seconds. Reseat DIMM(s). Reconnect it to power.
4. Make sure that DSA and BIOS/uEFI are at the latest level.

Related links
- IBM Support website
- Latest level of DSA
- Latest level of BMC/IMM

- **201-864-001 : Standalone Memory Test Aborted**

No GAS located in OEM1.

Recoverable
No

Severity
Warning

Serviceable
No

Automatically notify support
No

User Response
Complete the following steps:

1. Perform the actions mentioned one at a time and try the test after each action.
2. If the problem remains, contact your technical-service representative.
3. Turn off the system and disconnect it from power. Wait for 45 seconds. Reseat DIMM(s). Reconnect it to power.
4. Make sure that DSA and BIOS/uEFI are at the latest level.

Related links
- IBM Support website
- Latest level of DSA
- Latest level of BMC/IMM

- **201-864-002 : Standalone Memory Test Aborted**

No GAS located in OEM1.

Recoverable
No

Severity
Warning

Serviceable
No

Automatically notify support
No

User Response
Complete the following steps:

1. Perform the actions mentioned one at a time and try the test after each action.
2. If the problem remains, contact your technical-service representative.
3. Turn off the system and disconnect it from power. Wait for 45 seconds. Reseat DIMM(s). Reconnect it to power.
4. Make sure that DSA and BIOS/uEFI are at the latest level.

Related links
- IBM Support website
- Latest level of DSA
- Latest level of BMC/IMM

- **201-864-003 : Standalone Memory Test Aborted**

No GAS located in OEM1.

Recoverable
No

Severity
Warning

Serviceable
No

Automatically notify support
No

User Response
Complete the following steps:

1. Perform the actions mentioned one at a time and try the test after each action.
2. If the problem remains, contact your technical-service representative.
3. Turn off the system and disconnect it from power. Wait for 45 seconds. Reseat DIMM(s). Reconnect it to power.
4. Make sure that DSA and BIOS/uEFI are at the latest level.

Related links
- IBM Support website
- Latest level of DSA
- Latest level of BMC/IMM

- **201-865-000 : Standalone Memory Test Aborted**

No XSECSRAT key in OEM0 structure.

Recoverable
No

Severity
Warning

Serviceable
No

Automatically notify support
No

User Response
Complete the following steps:

1. Perform the actions mentioned one at a time and try the test after each action.
2. If the problem remains, contact your technical-service representative.
3. Turn off the system and disconnect it from power. Wait for 45 seconds. Reseat DIMM(s). Reconnect it to power.
4. Make sure that DSA and BIOS/uEFI are at the latest level.

Related links
- IBM Support website
- Latest level of DSA
- Latest level of BMC/IMM

- **201-865-001 : Standalone Memory Test Aborted**

No XSECSRAT key in OEM0 structure.

Recoverable
No

Severity
Warning

Serviceable
No

Automatically notify support
No

User Response
Complete the following steps:

1. Perform the actions mentioned one at a time and try the test after each action.
2. If the problem remains, contact your technical-service representative.
3. Turn off the system and disconnect it from power. Wait for 45 seconds. Reseat DIMM(s). Reconnect it to power.
4. Make sure that DSA and BIOS/uEFI are at the latest level.

Related links
- IBM Support website
- Latest level of DSA
- Latest level of BMC/IMM

- **201-865-002 : Standalone Memory Test Aborted**

No XSECSRAT key in OEM0 structure.

Recoverable
No

Severity
Warning

Serviceable
No

Automatically notify support
No

User Response
Complete the following steps:

1. Perform the actions mentioned one at a time and try the test after each action.
2. If the problem remains, contact your technical-service representative.
3. Turn off the system and disconnect it from power. Wait for 45 seconds. Reseat DIMM(s). Reconnect it to power.
4. Make sure that DSA and BIOS/uEFI are at the latest level.

Related links
- IBM Support website
- Latest level of DSA
- Latest level of BMC/IMM

- **201-865-003 : Standalone Memory Test Aborted**

No XSECSRAT key in OEM0 structure.

Recoverable
No

Severity
Warning

Serviceable
No

Automatically notify support
No

User Response

Complete the following steps:

1. Perform the actions mentioned one at a time and try the test after each action.
2. If the problem remains, contact your technical-service representative.
3. Turn off the system and disconnect it from power. Wait for 45 seconds. Reseat DIMM(s). Reconnect it to power.
4. Make sure that DSA and BIOS/uEFI are at the latest level.

Related links

- IBM Support website
- Latest level of DSA
- Latest level of BMC/IMM

- **201-866-000 : Standalone Memory Test Aborted**

EFI-SAL Invalid parameter from GetMemoryMap function.

Recoverable

No

Severity

Warning

Serviceable

No

Automatically notify support

No

User Response

Complete the following steps:

1. Perform the actions mentioned one at a time and try the test after each action.
2. If the problem remains, contact your technical-service representative.
3. Turn off the system and disconnect it from power. Wait for 45 seconds. Reseat DIMM(s). Reconnect it to power.
4. Make sure that DSA and BIOS/uEFI are at the latest level.

Related links

- IBM Support website
- Latest level of DSA
- Latest level of BMC/IMM

- **201-866-001 : Standalone Memory Test Aborted**

EFI-SAL Invalid parameter from GetMemoryMap function.

Recoverable

No

Severity

Warning

Serviceable

No

Automatically notify support

No

User Response

Complete the following steps:

1. Perform the actions mentioned one at a time and try the test after each action.
2. If the problem remains, contact your technical-service representative.
3. Turn off the system and disconnect it from power. Wait for 45 seconds. Reseat DIMM(s). Reconnect it to power.
4. Make sure that DSA and BIOS/uEFI are at the latest level.

Related links
- IBM Support website
- Latest level of DSA
- Latest level of BMC/IMM

- **201-866-002 : Standalone Memory Test Aborted**

  EFI-SAL Invalid parameter from GetMemoryMap function.

  Recoverable
  No

  Severity
  Warning

  Serviceable
  No

  Automatically notify support
  No

  User Response
  Complete the following steps:

  1. Perform the actions mentioned one at a time and try the test after each action.
  2. If the problem remains, contact your technical-service representative.
  3. Turn off the system and disconnect it from power. Wait for 45 seconds. Reseat DIMM(s). Reconnect it to power.
  4. Make sure that DSA and BIOS/uEFI are at the latest level.

  Related links
  - IBM Support website
  - Latest level of DSA
  - Latest level of BMC/IMM

- **201-866-003 : Standalone Memory Test Aborted**

  EFI-SAL Invalid parameter from GetMemoryMap function.

  Recoverable
  No

  Severity
  Warning

  Serviceable
  No

  Automatically notify support
  No

  User Response
  Complete the following steps:

  1. Perform the actions mentioned one at a time and try the test after each action.

2. If the problem remains, contact your technical-service representative.
3. Turn off the system and disconnect it from power. Wait for 45 seconds. Reseat DIMM(s). Reconnect it to power.
4. Make sure that DSA and BIOS/uEFI are at the latest level.

Related links

- IBM Support website
- Latest level of DSA
- Latest level of BMC/IMM

- **201-867-000 : Standalone Memory Test Aborted**

EFI/SAL: Buffer not allocated.

Recoverable
No

Severity
Warning

Serviceable
No

Automatically notify support
No

User Response
Complete the following steps:

1. Perform the actions mentioned one at a time and try the test after each action.
2. If the problem remains, contact your technical-service representative.
3. Turn off the system and disconnect it from power. Wait for 45 seconds. Reseat DIMM(s). Reconnect it to power.
4. Make sure that DSA and BIOS/uEFI are at the latest level.

Related links

- IBM Support website
- Latest level of DSA
- Latest level of BMC/IMM

- **201-867-001 : Standalone Memory Test Aborted**

EFI/SAL: Buffer not allocated.

Recoverable
No

Severity
Warning

Serviceable
No

Automatically notify support
No

User Response
Complete the following steps:

1. Perform the actions mentioned one at a time and try the test after each action.
2. If the problem remains, contact your technical-service representative.

3. Turn off the system and disconnect it from power. Wait for 45 seconds. Reseat DIMM(s). Reconnect it to power.
4. Make sure that DSA and BIOS/uEFI are at the latest level.

Related links
- IBM Support website
- Latest level of DSA
- Latest level of BMC/IMM

- **201-867-002 : Standalone Memory Test Aborted**

EFI/SAL: Buffer not allocated.

Recoverable
No

Severity
Warning

Serviceable
No

Automatically notify support
No

User Response
Complete the following steps:

1. Perform the actions mentioned one at a time and try the test after each action.
2. If the problem remains, contact your technical-service representative.
3. Turn off the system and disconnect it from power. Wait for 45 seconds. Reseat DIMM(s). Reconnect it to power.
4. Make sure that DSA and BIOS/uEFI are at the latest level.

Related links
- IBM Support website
- Latest level of DSA
- Latest level of BMC/IMM

- **201-867-003 : Standalone Memory Test Aborted**

EFI/SAL: Buffer not allocated.

Recoverable
No

Severity
Warning

Serviceable
No

Automatically notify support
No

User Response
Complete the following steps:

1. Perform the actions mentioned one at a time and try the test after each action.
2. If the problem remains, contact your technical-service representative.
3. Turn off the system and disconnect it from power. Wait for 45 seconds. Reseat DIMM(s). Reconnect it to power.

4. Make sure that DSA and BIOS/uEFI are at the latest level.

Related links

- IBM Support website
- Latest level of DSA
- Latest level of BMC/IMM

- **201-868-000 : Standalone Memory Test Aborted**

EFI/SAL: Buffer allocated in GetMemoryMap too small.

Recoverable
No

Severity
Warning

Serviceable
No

Automatically notify support
No

User Response
Complete the following steps:

1. Perform the actions mentioned one at a time and try the test after each action.
2. If the problem remains, contact your technical-service representative.
3. Turn off the system and disconnect it from power. Wait for 45 seconds. Reseat DIMM(s). Reconnect it to power.
4. Make sure that DSA and BIOS/uEFI are at the latest level.

Related links

- IBM Support website
- Latest level of DSA
- Latest level of BMC/IMM

- **201-868-001 : Standalone Memory Test Aborted**

EFI/SAL: Buffer allocated in GetMemoryMap too small.

Recoverable
No

Severity
Warning

Serviceable
No

Automatically notify support
No

User Response
Complete the following steps:

1. Perform the actions mentioned one at a time and try the test after each action.
2. If the problem remains, contact your technical-service representative.
3. Turn off the system and disconnect it from power. Wait for 45 seconds. Reseat DIMM(s). Reconnect it to power.
4. Make sure that DSA and BIOS/uEFI are at the latest level.

Related links

- IBM Support website
- Latest level of DSA
- Latest level of BMC/IMM

- **201-868-002 : Standalone Memory Test Aborted**

EFI/SAL: Buffer allocated in GetMemoryMap too small.

Recoverable
No

Severity
Warning

Serviceable
No

Automatically notify support
No

User Response
Complete the following steps:

1. Perform the actions mentioned one at a time and try the test after each action.
2. If the problem remains, contact your technical-service representative.
3. Turn off the system and disconnect it from power. Wait for 45 seconds. Reseat DIMM(s). Reconnect it to power.
4. Make sure that DSA and BIOS/uEFI are at the latest level.

Related links

- IBM Support website
- Latest level of DSA
- Latest level of BMC/IMM

- **201-868-003 : Standalone Memory Test Aborted**

EFI/SAL: Buffer allocated in GetMemoryMap too small.

Recoverable
No

Severity
Warning

Serviceable
No

Automatically notify support
No

User Response
Complete the following steps:

1. Perform the actions mentioned one at a time and try the test after each action.
2. If the problem remains, contact your technical-service representative.
3. Turn off the system and disconnect it from power. Wait for 45 seconds. Reseat DIMM(s). Reconnect it to power.
4. Make sure that DSA and BIOS/uEFI are at the latest level.

Related links

- IBM Support website

- Latest level of DSA
- Latest level of BMC/IMM

- **201-869-000 : Standalone Memory Test Aborted**

  EFI/SAL Invalid parameter from GetMemoryMap function.

  Recoverable
  No

  Severity
  Warning

  Serviceable
  No

  Automatically notify support
  No

  User Response
  Complete the following steps:

  1. Perform the actions mentioned one at a time and try the test after each action.
  2. If the problem remains, contact your technical-service representative.
  3. Turn off the system and disconnect it from power. Wait for 45 seconds. Reseat DIMM(s). Reconnect it to power.
  4. Make sure that DSA and BIOS/uEFI are at the latest level.

  Related links
  - IBM Support website
  - Latest level of DSA
  - Latest level of BMC/IMM

- **201-869-001 : Standalone Memory Test Aborted**

  EFI/SAL Invalid parameter from GetMemoryMap function.

  Recoverable
  No

  Severity
  Warning

  Serviceable
  No

  Automatically notify support
  No

  User Response
  Complete the following steps:

  1. Perform the actions mentioned one at a time and try the test after each action.
  2. If the problem remains, contact your technical-service representative.
  3. Turn off the system and disconnect it from power. Wait for 45 seconds. Reseat DIMM(s). Reconnect it to power.
  4. Make sure that DSA and BIOS/uEFI are at the latest level.

  Related links
  - IBM Support website
  - Latest level of DSA
  - Latest level of BMC/IMM

- **201-869-002 : Standalone Memory Test Aborted**

  EFI/SAL Invalid parameter from GetMemoryMap function.

  Recoverable
  No

  Severity
  Warning

  Serviceable
  No

  Automatically notify support
  No

  User Response
  Complete the following steps:

  1. Perform the actions mentioned one at a time and try the test after each action.
  2. If the problem remains, contact your technical-service representative.
  3. Turn off the system and disconnect it from power. Wait for 45 seconds. Reseat DIMM(s). Reconnect it to power.
  4. Make sure that DSA and BIOS/uEFI are at the latest level.

  Related links
  - IBM Support website
  - Latest level of DSA
  - Latest level of BMC/IMM
- **201-869-003 : Standalone Memory Test Aborted**

  EFI/SAL Invalid parameter from GetMemoryMap function.

  Recoverable
  No

  Severity
  Warning

  Serviceable
  No

  Automatically notify support
  No

  User Response
  Complete the following steps:

  1. Perform the actions mentioned one at a time and try the test after each action.
  2. If the problem remains, contact your technical-service representative.
  3. Turn off the system and disconnect it from power. Wait for 45 seconds. Reseat DIMM(s). Reconnect it to power.
  4. Make sure that DSA and BIOS/uEFI are at the latest level.

  Related links
  - IBM Support website
  - Latest level of DSA
  - Latest level of BMC/IMM
- **201-870-000 : Standalone Memory Test Aborted**

CPU Doamin in ACPI not valid.

Recoverable
No

Severity
Warning

Serviceable
No

Automatically notify support
No

User Response
Complete the following steps:

1. Perform the actions mentioned one at a time and try the test after each action.
2. If the problem remains, contact your technical-service representative.
3. Turn off the system and disconnect it from power. Wait for 45 seconds. Reseat DIMM(s). Reconnect it to power.
4. Make sure that DSA and BIOS/uEFI are at the latest level.

Related links
- IBM Support website
- Latest level of DSA
- Latest level of BMC/IMM

- **201-870-001 : Standalone Memory Test Aborted**

CPU Doamin in ACPI not valid.

Recoverable
No

Severity
Warning

Serviceable
No

Automatically notify support
No

User Response
Complete the following steps:

1. Perform the actions mentioned one at a time and try the test after each action.
2. If the problem remains, contact your technical-service representative.
3. Turn off the system and disconnect it from power. Wait for 45 seconds. Reseat DIMM(s). Reconnect it to power.
4. Make sure that DSA and BIOS/uEFI are at the latest level.

Related links
- IBM Support website
- Latest level of DSA
- Latest level of BMC/IMM

- **201-870-002 : Standalone Memory Test Aborted**

CPU Doamin in ACPI not valid.

Recoverable
No

Severity
Warning

Serviceable
No

Automatically notify support
No

User Response
Complete the following steps:

1. Perform the actions mentioned one at a time and try the test after each action.
2. If the problem remains, contact your technical-service representative.
3. Turn off the system and disconnect it from power. Wait for 45 seconds. Reseat DIMM(s). Reconnect it to power.
4. Make sure that DSA and BIOS/uEFI are at the latest level.

Related links
- IBM Support website
- Latest level of DSA
- Latest level of BMC/IMM

- **201-870-003 : Standalone Memory Test Aborted**

CPU Doamin in ACPI not valid.

Recoverable
No

Severity
Warning

Serviceable
No

Automatically notify support
No

User Response
Complete the following steps:

1. Perform the actions mentioned one at a time and try the test after each action.
2. If the problem remains, contact your technical-service representative.
3. Turn off the system and disconnect it from power. Wait for 45 seconds. Reseat DIMM(s). Reconnect it to power.
4. Make sure that DSA and BIOS/uEFI are at the latest level.

Related links
- IBM Support website
- Latest level of DSA
- Latest level of BMC/IMM

- **201-871-000 : Standalone Memory Test Aborted**

Data Mis-compare encountered.

Recoverable
No

Severity
Warning

Serviceable
No

Automatically notify support
No

User Response
Complete the following steps:

1. Perform the actions mentioned one at a time and try the test after each action.
2. If the problem remains, contact your technical-service representative.
3. Turn off the system and disconnect it from power. Wait for 45 seconds. Reseat DIMM(s). Reconnect it to power.
4. Make sure that DSA and BIOS/uEFI are at the latest level.

Related links
- IBM Support website
- Latest level of DSA
- Latest level of BMC/IMM

- **201-871-001 : Standalone Memory Test Aborted**

Data Mis-compare encountered.

Recoverable
No

Severity
Warning

Serviceable
No

Automatically notify support
No

User Response
Complete the following steps:

1. Perform the actions mentioned one at a time and try the test after each action.
2. If the problem remains, contact your technical-service representative.
3. Turn off the system and disconnect it from power. Wait for 45 seconds. Reseat DIMM(s). Reconnect it to power.
4. Make sure that DSA and BIOS/uEFI are at the latest level.

Related links
- IBM Support website
- Latest level of DSA
- Latest level of BMC/IMM

- **201-871-002 : Standalone Memory Test Aborted**

Data Mis-compare encountered.

Recoverable
No

Severity
Warning

Serviceable
No

Automatically notify support
No

User Response
Complete the following steps:

1. Perform the actions mentioned one at a time and try the test after each action.
2. If the problem remains, contact your technical-service representative.
3. Turn off the system and disconnect it from power. Wait for 45 seconds. Reseat DIMM(s). Reconnect it to power.
4. Make sure that DSA and BIOS/uEFI are at the latest level.

Related links
- IBM Support website
- Latest level of DSA
- Latest level of BMC/IMM

- **201-871-003 : Standalone Memory Test Aborted**

Data Mis-compare encountered.

Recoverable
No

Severity
Warning

Serviceable
No

Automatically notify support
No

User Response
Complete the following steps:

1. Perform the actions mentioned one at a time and try the test after each action.
2. If the problem remains, contact your technical-service representative.
3. Turn off the system and disconnect it from power. Wait for 45 seconds. Reseat DIMM(s). Reconnect it to power.
4. Make sure that DSA and BIOS/uEFI are at the latest level.

Related links
- IBM Support website
- Latest level of DSA
- Latest level of BMC/IMM

- **201-877-000 : Standalone Memory Test Aborted**

BIOS: Sparing in Extended PCI reg. must be OFF. Go to setup and disable sparing.

Recoverable
No

Severity
Warning

Serviceable
No

Automatically notify support
No

User Response
Complete the following steps:

1. Perform the actions mentioned one at a time and try the test after each action.
2. If the problem remains, contact your technical-service representative.
3. Turn off the system and disconnect it from power. Wait for 45 seconds. Reseat DIMM(s). Reconnect it to power.
4. Make sure that DSA and BIOS/uEFI are at the latest level.

Related links
- IBM Support website
- Latest level of DSA
- Latest level of BMC/IMM

- **201-877-001 : Standalone Memory Test Aborted**

BIOS: Sparing in Extended PCI reg. must be OFF. Go to setup and disable sparing.

Recoverable
No

Severity
Warning

Serviceable
No

Automatically notify support
No

User Response
Complete the following steps:

1. Perform the actions mentioned one at a time and try the test after each action.
2. If the problem remains, contact your technical-service representative.
3. Turn off the system and disconnect it from power. Wait for 45 seconds. Reseat DIMM(s). Reconnect it to power.
4. Make sure that DSA and BIOS/uEFI are at the latest level.

Related links
- IBM Support website
- Latest level of DSA
- Latest level of BMC/IMM

- **201-877-002 : Standalone Memory Test Aborted**

BIOS: Sparing in Extended PCI reg. must be OFF. Go to setup and disable sparing.

Recoverable
No

Severity
Warning

Serviceable
No

Automatically notify support
No

User Response

Complete the following steps:

1. Perform the actions mentioned one at a time and try the test after each action.
2. If the problem remains, contact your technical-service representative.
3. Turn off the system and disconnect it from power. Wait for 45 seconds. Reseat DIMM(s). Reconnect it to power.
4. Make sure that DSA and BIOS/uEFI are at the latest level.

Related links

- IBM Support website
- Latest level of DSA
- Latest level of BMC/IMM

- **201-877-003 : Standalone Memory Test Aborted**

BIOS: Sparing in Extended PCI reg. must be OFF. Go to setup and disable sparing.

Recoverable

No

Severity

Warning

Serviceable

No

Automatically notify support

No

User Response

Complete the following steps:

1. Perform the actions mentioned one at a time and try the test after each action.
2. If the problem remains, contact your technical-service representative.
3. Turn off the system and disconnect it from power. Wait for 45 seconds. Reseat DIMM(s). Reconnect it to power.
4. Make sure that DSA and BIOS/uEFI are at the latest level.

Related links

- IBM Support website
- Latest level of DSA
- Latest level of BMC/IMM

- **201-878-000 : Standalone Memory Test Aborted**

Sparing feature must be turned OFF. Go to setup and turn the sparing feature OFF.

Recoverable

No

Severity

Warning

Serviceable

No

Automatically notify support

No

User Response

Complete the following steps:

1. Perform the actions mentioned one at a time and try the test after each action.
2. If the problem remains, contact your technical-service representative.
3. Turn off the system and disconnect it from power. Wait for 45 seconds. Reseat DIMM(s). Reconnect it to power.
4. Make sure that DSA and BIOS/uEFI are at the latest level.

Related links
- IBM Support website
- Latest level of DSA
- Latest level of BMC/IMM

- **201-878-001 : Standalone Memory Test Aborted**

Sparing feature must be turned OFF. Go to setup and turn the sparing feature OFF.

Recoverable
No

Severity
Warning

Serviceable
No

Automatically notify support
No

User Response
Complete the following steps:

1. Perform the actions mentioned one at a time and try the test after each action.
2. If the problem remains, contact your technical-service representative.
3. Turn off the system and disconnect it from power. Wait for 45 seconds. Reseat DIMM(s). Reconnect it to power.
4. Make sure that DSA and BIOS/uEFI are at the latest level.

Related links
- IBM Support website
- Latest level of DSA
- Latest level of BMC/IMM

- **201-878-002 : Standalone Memory Test Aborted**

Sparing feature must be turned OFF. Go to setup and turn the sparing feature OFF.

Recoverable
No

Severity
Warning

Serviceable
No

Automatically notify support
No

User Response
Complete the following steps:

1. Perform the actions mentioned one at a time and try the test after each action.

2. If the problem remains, contact your technical-service representative.
3. Turn off the system and disconnect it from power. Wait for 45 seconds. Reseat DIMM(s). Reconnect it to power.
4. Make sure that DSA and BIOS/uEFI are at the latest level.

Related links

- IBM Support website
- Latest level of DSA
- Latest level of BMC/IMM

- **201-878-003 : Standalone Memory Test Aborted**

Sparing feature must be turned OFF. Go to setup and turn the sparing feature OFF.

Recoverable
No

Severity
Warning

Serviceable
No

Automatically notify support
No

User Response
Complete the following steps:

1. Perform the actions mentioned one at a time and try the test after each action.
2. If the problem remains, contact your technical-service representative.
3. Turn off the system and disconnect it from power. Wait for 45 seconds. Reseat DIMM(s). Reconnect it to power.
4. Make sure that DSA and BIOS/uEFI are at the latest level.

Related links

- IBM Support website
- Latest level of DSA
- Latest level of BMC/IMM

- **201-885-000 : Standalone Memory Test Aborted**

Processor does not support MTRR register manipulation. Can not write to memory without cache.

Recoverable
No

Severity
Warning

Serviceable
No

Automatically notify support
No

User Response
Complete the following steps:

1. Perform the actions mentioned one at a time and try the test after each action.
2. If the problem remains, contact your technical-service representative.

3. Turn off the system and disconnect it from power. Wait for 45 seconds. Reseat DIMM(s). Reconnect it to power.
4. Make sure that DSA and BIOS/uEFI are at the latest level.

Related links
- IBM Support website
- Latest level of DSA
- Latest level of BMC/IMM

- **201-885-001 : Standalone Memory Test Aborted**

Processor does not support MTRR register manipulation. Can not write to memory without cache.

Recoverable
No

Severity
Warning

Serviceable
No

Automatically notify support
No

User Response
Complete the following steps:

1. Perform the actions mentioned one at a time and try the test after each action.
2. If the problem remains, contact your technical-service representative.
3. Turn off the system and disconnect it from power. Wait for 45 seconds. Reseat DIMM(s). Reconnect it to power.
4. Make sure that DSA and BIOS/uEFI are at the latest level.

Related links
- IBM Support website
- Latest level of DSA
- Latest level of BMC/IMM

- **201-885-002 : Standalone Memory Test Aborted**

Processor does not support MTRR register manipulation. Can not write to memory without cache.

Recoverable
No

Severity
Warning

Serviceable
No

Automatically notify support
No

User Response
Complete the following steps:

1. Perform the actions mentioned one at a time and try the test after each action.
2. If the problem remains, contact your technical-service representative.
3. Turn off the system and disconnect it from power. Wait for 45 seconds. Reseat DIMM(s). Reconnect it to power.

4. Make sure that DSA and BIOS/uEFI are at the latest level.

Related links

- IBM Support website
- Latest level of DSA
- Latest level of BMC/IMM

- **201-885-003 : Standalone Memory Test Aborted**

Processor does not support MTRR register manipulation. Can not write to memory without cache.

Recoverable
No

Severity
Warning

Serviceable
No

Automatically notify support
No

User Response
Complete the following steps:

1. Perform the actions mentioned one at a time and try the test after each action.
2. If the problem remains, contact your technical-service representative.
3. Turn off the system and disconnect it from power. Wait for 45 seconds. Reseat DIMM(s). Reconnect it to power.
4. Make sure that DSA and BIOS/uEFI are at the latest level.

Related links

- IBM Support website
- Latest level of DSA
- Latest level of BMC/IMM

- **201-886-000 : Standalone Memory Test Aborted**

Memory Upper limit is less than 16 Mbytes.

Recoverable
No

Severity
Warning

Serviceable
No

Automatically notify support
No

User Response
Complete the following steps:

1. Perform the actions mentioned one at a time and try the test after each action.
2. If the problem remains, contact your technical-service representative.
3. Turn off the system and disconnect it from power. Wait for 45 seconds. Reseat DIMM(s). Reconnect it to power.
4. Make sure that DSA and BIOS/uEFI are at the latest level.

Related links

- IBM Support website
- Latest level of DSA
- Latest level of BMC/IMM

- **201-886-001 : Standalone Memory Test Aborted**

Memory Upper limit is less than 16 Mbytes.

Recoverable
No

Severity
Warning

Serviceable
No

Automatically notify support
No

User Response
Complete the following steps:

1. Perform the actions mentioned one at a time and try the test after each action.
2. If the problem remains, contact your technical-service representative.
3. Turn off the system and disconnect it from power. Wait for 45 seconds. Reseat DIMM(s). Reconnect it to power.
4. Make sure that DSA and BIOS/uEFI are at the latest level.

Related links

- IBM Support website
- Latest level of DSA
- Latest level of BMC/IMM

- **201-886-002 : Standalone Memory Test Aborted**

Memory Upper limit is less than 16 Mbytes.

Recoverable
No

Severity
Warning

Serviceable
No

Automatically notify support
No

User Response
Complete the following steps:

1. Perform the actions mentioned one at a time and try the test after each action.
2. If the problem remains, contact your technical-service representative.
3. Turn off the system and disconnect it from power. Wait for 45 seconds. Reseat DIMM(s). Reconnect it to power.
4. Make sure that DSA and BIOS/uEFI are at the latest level.

Related links

- IBM Support website

- Latest level of DSA
- Latest level of BMC/IMM

- **201-886-003 : Standalone Memory Test Aborted**

  Memory Upper limit is less than 16 Mbytes.

  Recoverable
  No

  Severity
  Warning

  Serviceable
  No

  Automatically notify support
  No

  User Response
  Complete the following steps:

  1. Perform the actions mentioned one at a time and try the test after each action.
  2. If the problem remains, contact your technical-service representative.
  3. Turn off the system and disconnect it from power. Wait for 45 seconds. Reseat DIMM(s). Reconnect it to power.
  4. Make sure that DSA and BIOS/uEFI are at the latest level.

  Related links
  - IBM Support website
  - Latest level of DSA
  - Latest level of BMC/IMM

- **201-899-000 : Standalone Memory Test Aborted**

  Memory Diagnostics Test Aborted by user.

  Recoverable
  No

  Severity
  Warning

  Serviceable
  No

  Automatically notify support
  No

  Related links
  - IBM Support website
  - Latest level of DSA
  - Latest level of BMC/IMM

- **201-899-001 : Standalone Memory Test Aborted**

  Memory Diagnostics Test Aborted by user.

  Recoverable
  No

  Severity
  Warning

Serviceable
No

Automatically notify support
No

Related links
- IBM Support website
- Latest level of DSA
- Latest level of BMC/IMM

- **201-899-002 : Standalone Memory Test Aborted**

Memory Diagnostics Test Aborted by user.

Recoverable
No

Severity
Warning

Serviceable
No

Automatically notify support
No

Related links
- IBM Support website
- Latest level of DSA
- Latest level of BMC/IMM

- **201-899-003 : Standalone Memory Test Aborted**

Memory Diagnostics Test Aborted by user.

Recoverable
No

Severity
Warning

Serviceable
No

Automatically notify support
No

Related links
- IBM Support website
- Latest level of DSA
- Latest level of BMC/IMM

- **201-901-000 : Standalone Memory Test Failed**

Memory Diagnostics Test Failed.

Recoverable
No

Severity
Error

Serviceable
Yes

Automatically notify support
No

User Response
Complete the following steps:

1. Perform the actions mentioned one at a time and try the test after each action.
2. If the problem remains, contact your technical-service representative.
3. Turn off the system and disconnect it from power. Wait for 45 seconds. Reseat DIMM(s). Reconnect it to power.
4. Make sure that DSA and BIOS/uEFI are at the latest level.
5. Replace any DIMMS(s) mentioned in error, one by one.
6. Make sure that all DIMMs are enabled in the Configuration/Setup Utility program.
7. If failure remains, refer to "Troubleshooting by symptom" in the system "Installation and Service Guide" for the next corrective action.

Related links
- IBM Support website
- Latest level of DSA
- Latest level of BMC/IMM

- **201-901-001 : Standalone Memory Test Failed**

Memory Diagnostics Test Failed.

Recoverable
No

Severity
Error

Serviceable
Yes

Automatically notify support
No

User Response
Complete the following steps:

1. Perform the actions mentioned one at a time and try the test after each action.
2. If the problem remains, contact your technical-service representative.
3. Turn off the system and disconnect it from power. Wait for 45 seconds. Reseat DIMM(s). Reconnect it to power.
4. Make sure that DSA and BIOS/uEFI are at the latest level.
5. Replace any DIMMS(s) mentioned in error, one by one.
6. Make sure that all DIMMs are enabled in the Configuration/Setup Utility program.
7. If failure remains, refer to "Troubleshooting by symptom" in the system "Installation and Service Guide" for the next corrective action.

Related links
- IBM Support website
- Latest level of DSA
- Latest level of BMC/IMM

- **201-901-002 : Standalone Memory Test Failed**

Memory Diagnostics Test Failed.

Recoverable
No

Severity
Error

Serviceable
Yes

Automatically notify support
No

User Response
Complete the following steps:

1. Perform the actions mentioned one at a time and try the test after each action.
2. If the problem remains, contact your technical-service representative.
3. Turn off the system and disconnect it from power. Wait for 45 seconds. Reseat DIMM(s). Reconnect it to power.
4. Make sure that DSA and BIOS/uEFI are at the latest level.
5. Replace any DIMMS(s) mentioned in error, one by one.
6. Make sure that all DIMMs are enabled in the Configuration/Setup Utility program.
7. If failure remains, refer to "Troubleshooting by symptom" in the system "Installation and Service Guide" for the next corrective action.

Related links
- IBM Support website
- Latest level of DSA
- Latest level of BMC/IMM

- **201-901-003 : Standalone Memory Test Failed**

Memory Diagnostics Test Failed.

Recoverable
No

Severity
Error

Serviceable
Yes

Automatically notify support
No

User Response
Complete the following steps:

1. Perform the actions mentioned one at a time and try the test after each action.
2. If the problem remains, contact your technical-service representative.
3. Turn off the system and disconnect it from power. Wait for 45 seconds. Reseat DIMM(s). Reconnect it to power.
4. Make sure that DSA and BIOS/uEFI are at the latest level.
5. Replace any DIMMS(s) mentioned in error, one by one.
6. Make sure that all DIMMs are enabled in the Configuration/Setup Utility program.
7. If failure remains, refer to "Troubleshooting by symptom" in the system "Installation and Service Guide" for the next corrective action.

Related links
- IBM Support website
- Latest level of DSA
- Latest level of BMC/IMM

DSA memory stress test results

The following messages can result when you run the memory stress test.

Test results for the DSA memory stress test

The following messages can result when you run the DSA memory stress test.

- **202-000-000 : MemStr Test Passed**

  Test Passed.

  Recoverable
  No

  Severity
  Event

  Serviceable
  No

  Automatically notify support
  No

  Related links
  - IBM Support website
  - Latest level of DSA
  - Latest level of BMC/IMM
- **202-801-000 : MemStr Test Aborted**

  Internal program error.

  Recoverable
  No

  Severity
  Warning

  Serviceable
  Yes

  Automatically notify support
  No

  User Response
  Complete the following steps:
  1. Turn off and restart the system.
  2. Make sure that the DSA Diagnostic code is at the latest level.
  3. Run the test again.
  4. If the system has stopped responding, turn off and restart the system.
  5. Check the system firmware level and upgrade if necessary.
  6. Run the memory diagnostic to identify the specific failing DIMM.

7. If the failure remains, refer to "Troubleshooting by symptom" in the system "Installation and Service Guide" for the next corrective action.

Related links

- IBM Support website
- Latest level of DSA
- Latest level of BMC/IMM

- **202-802-000 : MemStr Test Aborted**

  Memory size is insufficient to run the test. At least 1 GB is required.

  Recoverable
  No

  Severity
  Warning

  Serviceable
  Yes

  Automatically notify support
  No

  Related links

  - IBM Support website
  - Latest level of DSA
  - Latest level of BMC/IMM

- **202-803-000 : MemStr Test Aborted**

  User pressed Ctrl-C.

  Recoverable
  No

  Severity
  Warning

  Serviceable
  Yes

  Automatically notify support
  No

  Related links

  - IBM Support website
  - Latest level of DSA
  - Latest level of BMC/IMM

- **202-901-000 : MemStr Test Failed**

  Test Failed.

  Recoverable
  No

  Severity
  Error

  Serviceable
  Yes

  Automatically notify support
  No

User Response

Complete the following steps:

1. Execute the standard DSA memory diagnostics to validate all memory.
2. Make sure that the DSA Diagnostic code is at the latest level.
3. Turn off the system and disconnect it from power.
4. Reseat the memory cards and DIMMs.
5. Reconnect the system to power and turn the system on.
6. Run the test again.
7. Execute the standard DSA memory diagnostics to validate all memory.
8. If the failure remains, refer to "Troubleshooting by symptom" in the system "Installation and Service Guide" for the next corrective action.

Related links

- IBM Support website
- Latest level of DSA
- Latest level of BMC/IMM

- **202-902-000 : MemStr Test Failed**

Memory size is insufficient to run the test.

Recoverable

No

Severity

Error

Serviceable

Yes

Automatically notify support

No

User Response

Complete the following steps:

1. Ensure that all memory is enabled by checking the "Available System Memory" in the "Resource Utilization" section of the DSA Diagnostic Event log.
2. If necessary, access the Configuration/Setup Utility program by pressing F1 during system boot and enable all memory.
3. Make sure that the DSA Diagnostic code is at the latest level.
4. Run the test again.
5. Execute the standard DSA memory diagnostics to validate all memory.
6. If the failure remains, refer to "Troubleshooting by symptom" in the system "Installation and Service Guide" for the next corrective action.

Related links

- IBM Support website
- Latest level of DSA
- Latest level of BMC/IMM

DSA system management test results

The following messages can result when you run the system management test.

Test results for the DSA system management test

The following messages can result when you run the DSA system management test.

- **166-000-001 : IMM I2C Test Passed**

  IMM I2C Test Passed.

  Recoverable
  No

  Severity
  Event

  Serviceable
  No

  Automatically notify support
  No

  Related links
  - IBM Support website
  - Latest level of DSA
  - Latest level of BMC/IMM

- **166-801-001 : IMM I2C Test Aborted**

  IMM returned incorrect response length.

  Recoverable
  No

  Severity
  Warning

  Serviceable
  Yes

  Automatically notify support
  No

  User Response
  Perform the actions mentioned one at a time and try the test after each action:

  1. Turn off the system and disconnect it from power. Wait for 45 seconds. Reconnect it to power.
  2. Make sure that DSA and BMC/IMM are at the latest level.

  Related links
  - IBM Support website
  - Latest level of DSA
  - Latest level of BMC/IMM

- **166-802-001 : IMM I2C Test Aborted**

  Test cannot be completed for unknown reason.

  Recoverable
  No

  Severity
  Warning

  Serviceable
  Yes

Automatically notify support
No

User Response
Perform the actions mentioned one at a time and try the test after each action:

1. Turn off the system and disconnect it from power. Wait for 45 seconds. Reconnect it to power.
2. Make sure that DSA and BMC/IMM are at the latest level.

Related links
- IBM Support website
- Latest level of DSA
- Latest level of BMC/IMM

- **166-803-001 : IMM I2C Test Aborted**

Node Busy. Try later.

Recoverable
No

Severity
Warning

Serviceable
Yes

Automatically notify support
No

User Response
Perform the actions mentioned one at a time and try the test after each action:

1. Turn off the system and disconnect it from power. Wait for 45 seconds. Reconnect it to power.
2. Make sure that DSA and BMC/IMM are at the latest level.

Related links
- IBM Support website
- Latest level of DSA
- Latest level of BMC/IMM

- **166-804-001 : IMM I2C Test Aborted**

Invalid Command.

Recoverable
No

Severity
Warning

Serviceable
Yes

Automatically notify support
No

User Response
Perform the actions mentioned one at a time and try the test after each action:

1. Turn off the system and disconnect it from power. Wait for 45 seconds. Reconnect it to power.
2. Make sure that DSA and BMC/IMM are at the latest level.

Related links
- IBM Support website

- Latest level of DSA
- Latest level of BMC/IMM

- **166-805-001 : IMM I2C Test Aborted**

  Invalid Command for given LUN.

  Recoverable
  No

  Severity
  Warning

  Serviceable
  Yes

  Automatically notify support
  No

  User Response
  Perform the actions mentioned one at a time and try the test after each action:

  1. Turn off the system and disconnect it from power. Wait for 45 seconds. Reconnect it to power.
  2. Make sure that DSA and BMC/IMM are at the latest level.

  Related links
  - IBM Support website
  - Latest level of DSA
  - Latest level of BMC/IMM

- **166-806-001 : IMM I2C Test Aborted**

  Timeout while processing command.

  Recoverable
  No

  Severity
  Warning

  Serviceable
  Yes

  Automatically notify support
  No

  User Response
  Perform the actions mentioned one at a time and try the test after each action:

  1. Turn off the system and disconnect it from power. Wait for 45 seconds. Reconnect it to power.
  2. Make sure that DSA and BMC/IMM are at the latest level.

  Related links
  - IBM Support website
  - Latest level of DSA
  - Latest level of BMC/IMM

- **166-807-001 : IMM I2C Test Aborted**

  Out of space.

  Recoverable
  No

  Severity

Warning

Serviceable
Yes

Automatically notify support
No

User Response
Perform the actions mentioned one at a time and try the test after each action:

1. Turn off the system and disconnect it from power. Wait for 45 seconds. Reconnect it to power.
2. Make sure that DSA and BMC/IMM are at the latest level.

Related links
- IBM Support website
- Latest level of DSA
- Latest level of BMC/IMM

- **166-808-001 : IMM I2C Test Aborted**

Reservation Canceled or Invalid Reservation ID.

Recoverable
No

Severity
Warning

Serviceable
Yes

Automatically notify support
No

User Response
Perform the actions mentioned one at a time and try the test after each action:

1. Turn off the system and disconnect it from power. Wait for 45 seconds. Reconnect it to power.
2. Make sure that DSA and BMC/IMM are at the latest level.

Related links
- IBM Support website
- Latest level of DSA
- Latest level of BMC/IMM

- **166-809-001 : IMM I2C Test Aborted**

Request data truncated.

Recoverable
No

Severity
Warning

Serviceable
Yes

Automatically notify support
No

User Response
Perform the actions mentioned one at a time and try the test after each action:

1. Turn off the system and disconnect it from power. Wait for 45 seconds. Reconnect it to power.
2. Make sure that DSA and BMC/IMM are at the latest level.

Related links
- IBM Support website
- Latest level of DSA
- Latest level of BMC/IMM

- **166-810-001 : IMM I2C Test Aborted**

Request data length invalid.

Recoverable
No

Severity
Warning

Serviceable
Yes

Automatically notify support
No

User Response
Perform the actions mentioned one at a time and try the test after each action:

1. Turn off the system and disconnect it from power. Wait for 45 seconds. Reconnect it to power.
2. Make sure that DSA and BMC/IMM are at the latest level.

Related links
- IBM Support website
- Latest level of DSA
- Latest level of BMC/IMM

- **166-811-001 : IMM I2C Test Aborted**

Request data field length limit exceeded.

Recoverable
No

Severity
Warning

Serviceable
Yes

Automatically notify support
No

User Response
Perform the actions mentioned one at a time and try the test after each action:

1. Turn off the system and disconnect it from power. Wait for 45 seconds. Reconnect it to power.
2. Make sure that DSA and BMC/IMM are at the latest level.

Related links
- IBM Support website
- Latest level of DSA
- Latest level of BMC/IMM

- **166-812-001 : IMM I2C Test Aborted**

Parameter out of range.

Recoverable
No

Severity
Warning

Serviceable
Yes

Automatically notify support
No

User Response
Perform the actions mentioned one at a time and try the test after each action:

1. Turn off the system and disconnect it from power. Wait for 45 seconds. Reconnect it to power.
2. Make sure that DSA and BMC/IMM are at the latest level.

Related links
- IBM Support website
- Latest level of DSA
- Latest level of BMC/IMM

- **166-813-001 : IMM I2C Test Aborted**

Cannot return number of requested data bytes.

Recoverable
No

Severity
Warning

Serviceable
Yes

Automatically notify support
No

User Response
Perform the actions mentioned one at a time and try the test after each action:

1. Turn off the system and disconnect it from power. Wait for 45 seconds. Reconnect it to power.
2. Make sure that DSA and BMC/IMM are at the latest level.

Related links
- IBM Support website
- Latest level of DSA
- Latest level of BMC/IMM

- **166-814-001 : IMM I2C Test Aborted**

Requested Sensor, data, or record not present.

Recoverable
No

Severity
Warning

Serviceable
Yes

Automatically notify support
No

User Response

Perform the actions mentioned one at a time and try the test after each action:

1. Turn off the system and disconnect it from power. Wait for 45 seconds. Reconnect it to power.
2. Make sure that DSA and BMC/IMM are at the latest level.

Related links

- IBM Support website
- Latest level of DSA
- Latest level of BMC/IMM

- **166-815-001 : IMM I2C Test Aborted**

Invalid data field in Request.

Recoverable

No

Severity

Warning

Serviceable

Yes

Automatically notify support

No

User Response

Perform the actions mentioned one at a time and try the test after each action:

1. Turn off the system and disconnect it from power. Wait for 45 seconds. Reconnect it to power.
2. Make sure that DSA and BMC/IMM are at the latest level.

Related links

- IBM Support website
- Latest level of DSA
- Latest level of BMC/IMM

- **166-816-001 : IMM I2C Test Aborted**

Command illegal for specified sensor or record type.

Recoverable

No

Severity

Warning

Serviceable

Yes

Automatically notify support

No

User Response

Perform the actions mentioned one at a time and try the test after each action:

1. Turn off the system and disconnect it from power. Wait for 45 seconds. Reconnect it to power.
2. Make sure that DSA and BMC/IMM are at the latest level.

Related links

- IBM Support website
- Latest level of DSA
- Latest level of BMC/IMM

- **166-817-001 : IMM I2C Test Aborted**

  Command response could not be provided.

  Recoverable
  No

  Severity
  Warning

  Serviceable
  Yes

  Automatically notify support
  No

  User Response
  Perform the actions mentioned one at a time and try the test after each action:

  1. Turn off the system and disconnect it from power. Wait for 45 seconds. Reconnect it to power.
  2. Make sure that DSA and BMC/IMM are at the latest level.

  Related links
  - IBM Support website
  - Latest level of DSA
  - Latest level of BMC/IMM
- **166-818-001 : IMM I2C Test Aborted**

  Cannot execute duplicated request.

  Recoverable
  No

  Severity
  Warning

  Serviceable
  Yes

  Automatically notify support
  No

  User Response
  Perform the actions mentioned one at a time and try the test after each action:

  1. Turn off the system and disconnect it from power. Wait for 45 seconds. Reconnect it to power.
  2. Make sure that DSA and BMC/IMM are at the latest level.

  Related links
  - IBM Support website
  - Latest level of DSA
  - Latest level of BMC/IMM
- **166-819-001 : IMM I2C Test Aborted**

  Command response could not be provided. SDR Repository in?update mode.

  Recoverable
  No

  Severity
  Warning

  Serviceable

Yes

Automatically notify support
No

User Response
Perform the actions mentioned one at a time and try the test after each action:

1. Turn off the system and disconnect it from power. Wait for 45 seconds. Reconnect it to power.
2. Make sure that DSA and BMC/IMM are at the latest level.

Related links
- IBM Support website
- Latest level of DSA
- Latest level of BMC/IMM

- **166-820-001 : IMM I2C Test Aborted**

Command response could not be provided. Device in firmware update mode.

Recoverable
No

Severity
Warning

Serviceable
Yes

Automatically notify support
No

User Response
Perform the actions mentioned one at a time and try the test after each action:

1. Turn off the system and disconnect it from power. Wait for 45 seconds. Reconnect it to power.
2. Make sure that DSA and BMC/IMM are at the latest level.

Related links
- IBM Support website
- Latest level of DSA
- Latest level of BMC/IMM

- **166-821-001 : IMM I2C Test Aborted**

Command response could not be provided. BMC initialization in progress.

Recoverable
No

Severity
Warning

Serviceable
Yes

Automatically notify support
No

User Response
Perform the actions mentioned one at a time and try the test after each action:

1. Turn off the system and disconnect it from power. Wait for 45 seconds. Reconnect it to power.
2. Make sure that DSA and BMC/IMM are at the latest level.

Related links

- IBM Support website
- Latest level of DSA
- Latest level of BMC/IMM

- **166-822-001 : IMM I2C Test Aborted**

Destination unavailable.

Recoverable
No

Severity
Warning

Serviceable
Yes

Automatically notify support
No

User Response
Perform the actions mentioned one at a time and try the test after each action:

1. Turn off the system and disconnect it from power. Wait for 45 seconds. Reconnect it to power.
2. Make sure that DSA and BMC/IMM are at the latest level.

Related links

- IBM Support website
- Latest level of DSA
- Latest level of BMC/IMM

- **166-823-001 : IMM I2C Test Aborted**

Cannot execute command. Insufficient privilege level.

Recoverable
No

Severity
Warning

Serviceable
Yes

Automatically notify support
No

User Response
Perform the actions mentioned one at a time and try the test after each action:

1. Turn off the system and disconnect it from power. Wait for 45 seconds. Reconnect it to power.
2. Make sure that DSA and BMC/IMM are at the latest level.

Related links

- IBM Support website
- Latest level of DSA
- Latest level of BMC/IMM

- **166-824-001 : IMM I2C Test Aborted**

Cannot execute command.

Recoverable
No

Severity
Warning

Serviceable
Yes

Automatically notify support
No

User Response
Perform the actions mentioned one at a time and try the test after each action:

1. Turn off the system and disconnect it from power. Wait for 45 seconds. Reconnect it to power.
2. Make sure that DSA and BMC/IMM are at the latest level.

Related links
- IBM Support website
- Latest level of DSA
- Latest level of BMC/IMM

- **166-901-001 : IMM I2C Test Failed**

IMM Indicates failure in H8S 2117 bus (BUS 0).

Recoverable
No

Severity
Error

Serviceable
Yes

Automatically notify support
No

User Response
Perform the actions mentioned one at a time and try the test after each action:

1. Turn off the system and disconnect it from power. Wait for 45 seconds. Reconnect it to power.
2. Make sure that DSA and BMC/IMM are at the latest level.
3. Run the test again.
4. If failure remains, refer to "Troubleshooting by symptom" in the system "Installation and Service Guide" for the next corrective action.

Related links
- IBM Support website
- Latest level of DSA
- Latest level of BMC/IMM

- **166-904-001 : IMM I2C Test Failed**

IMM Indicates failure in PCA9543--2-Channel I2C Switch bus (BUS 3).

Recoverable
No

Severity
Error

Serviceable
Yes

Automatically notify support

No

User Response

Perform the actions mentioned one at a time and try the test after each action:

1. Turn off the system and disconnect it from power. Wait for 45 seconds. Reconnect it to power.
2. Make sure that DSA and BMC/IMM are at the latest level.
3. Run the test again.
4. If failure remains, refer to "Troubleshooting by symptom" in the system "Installation and Service Guide" for the next corrective action.

Related links

- IBM Support website
- Latest level of DSA
- Latest level of BMC/IMM

- **166-905-001 : IMM I2C Test Failed**

IMM Indicates failure in MAX7319 --I2C Port Expander bus (BUS 4).

Recoverable

No

Severity

Error

Serviceable

Yes

Automatically notify support

No

User Response

Perform the actions mentioned one at a time and try the test after each action:

1. Turn off the system and disconnect it from power. Wait for 45 seconds. Reconnect it to power.
2. Make sure that DSA and BMC/IMM are at the latest level.
3. Run the test again.
4. If failure remains, refer to "Troubleshooting by symptom" in the system "Installation and Service Guide" for the next corrective action.

Related links

- IBM Support website
- Latest level of DSA
- Latest level of BMC/IMM

- **166-907-001 : IMM I2C Test Failed**

IMM Indicates failure in LM75--Thermal Sensor bus (BUS 6).

Recoverable

No

Severity

Error

Serviceable

Yes

Automatically notify support

No

User Response

Perform the actions mentioned one at a time and try the test after each action:

1. Turn off the system and disconnect it from power. Wait for 45 seconds. Reconnect it to power.
2. Make sure that DSA and BMC/IMM are at the latest level.
3. Run the test again.
4. If failure remains, refer to "Troubleshooting by symptom" in the system "Installation and Service Guide" for the next corrective action.

Related links

- IBM Support website
- Latest level of DSA
- Latest level of BMC/IMM

- **166-908-001 : IMM I2C Test Failed**

IMM Indicates failure in PCA9557 bus (BUS 7).

Recoverable

No

Severity

Error

Serviceable

Yes

Automatically notify support

No

User Response

Perform the actions mentioned one at a time and try the test after each action:

1. Turn off the system and disconnect it from power. Wait for 45 seconds. Reconnect it to power.
2. Make sure that DSA and BMC/IMM are at the latest level.
3. Run the test again.
4. If failure remains, refer to "Troubleshooting by symptom" in the system "Installation and Service Guide" for the next corrective action.

Related links

- IBM Support website
- Latest level of DSA
- Latest level of BMC/IMM

Appendix D. Getting help and technical assistance

If you need help, service, or technical assistance or just want more information about Lenovo products, you will find a wide variety of sources available from Lenovo to assist you.

Use this information to obtain additional information about Lenovo and Lenovo products, and determine what to do if you experience a problem with your Lenovo system or optional device.

Note: This section includes references to IBM Web sites and information about obtaining service. IBM is Lenovo's preferred service provider for the System x, Flex System, and NeXtScale System products.

Before you call

Before you call, make sure that you have taken these steps to try to solve the problem yourself.

If you believe that you require warranty service for your Lenovo product, the service technicians will be able to assist you more efficiently if you prepare before you call.

- Check all cables to make sure that they are connected.
- Check the power switches to make sure that the system and any optional devices are turned on.
- Check for updated software, firmware, and operating-system device drivers for your Lenovo product. The Lenovo Warranty terms and conditions state that you, the owner of the Lenovo product, are responsible for maintaining and updating all software and firmware for the product (unless it is covered by an additional maintenance contract). Your service technician will request that you upgrade your software and firmware if the problem has a documented solution within a software upgrade.
- If you have installed new hardware or software in your environment, check http://www.lenovo.com/serverproven/ to make sure that the hardware and software is supported by your product.
- Go to http://www.lenovo.com/support to check for information to help you solve the problem.
- Gather the following information to provide to the service technician. This data will help the service technician quickly provide a solution to your problem and ensure that you receive the level of service for which you might have contracted.
  - Hardware and Software Maintenance agreement contract numbers, if applicable
  - Machine type number (Lenovo 4-digit machine identifier)
  - Model number
  - Serial number
  - Current system UEFI and firmware levels
  - Other pertinent information such as error messages and logs
- Go to http://www.ibm.com/support/ entry/portal/Open_service_request to submit an Electronic Service Request. Submitting an Electronic Service Request will start the process of determining a solution to your problem by making the pertinent information available to the service technicians. The IBM service technicians can start working on your solution as soon as you have completed and submitted an Electronic Service Request.

You can solve many problems without outside assistance by following the troubleshooting procedures that Lenovo provides in the online help or in the Lenovo product documentation. The Lenovo product documentation also describes the diagnostic tests that you can perform. The documentation for most systems, operating systems, and programs contains troubleshooting procedures and explanations of error messages and error codes. If you suspect a software problem, see the documentation for the operating system or program.

© Copyright Lenovo 2016, 2023

Using the documentation

Information about your Lenovo system and preinstalled software, if any, or optional device is available in the product documentation. That documentation can include printed documents, online documents, readme files, and help files.

See the troubleshooting information in your system documentation for instructions for using the diagnostic programs. The troubleshooting information or the diagnostic programs might tell you that you need additional or updated device drivers or other software. Lenovo maintains pages on the World Wide Web where you can get the latest technical information and download device drivers and updates. To access these pages, go to http://www.lenovo.com/support.

Getting help and information from the World Wide Web

Up-to-date information about Lenovo products and support is available on the World Wide Web.

On the World Wide Web, up-to-date information about Lenovo systems, optional devices, services, and support is available at http://www.lenovo.com/support. The most current version of the product documentation is available in the following product-specific Information Centers:

- **Flex System products:**

  http://pic.dhe.ibm.com/infocenter/ flexsys/information/index.jsp
- **System x products:**

  http://shop.lenovo.com/us/ en/systems/
- **NeXtScale System products:**

  http://pic.dhe.ibm.com/infocenter/ nxtscale/documentation/index.jsp

How to send DSA data

You can use the Enhanced Customer Data Repository to send diagnostic data to Lenovo.

Before you send diagnostic data to Lenovo, read the terms of use at http://www.ibm.com/de/support/ ecurep/ terms.html.

You can use any of the following methods to send diagnostic data:

- **Standard upload**:

  http://www.ibm.com/de/support/ ecurep/send_http.html
- **Standard upload with the system serial number**:

  http://www.ecurep.ibm.com/app/ upload_hw
- **Secure upload**:

  http://www.ibm.com/de/support/ ecurep/send_http.html#secure
- **Secure upload with the system serial number**:

  https://www.ecurep.ibm.com/ app/upload_hw

Creating a personalized support Web page

You can create a personalized support Web page by identifying Lenovo products that are of interest to you.

To create a personalized support Web page, go to http://www.ibm.com/support/ mynotifications. From this personalized page, you can subscribe to weekly e-mail notifications about new technical documents, search for information and downloads, and access various administrative services.

Software service and support

Through IBM Support Line, you can get telephone assistance, for a fee, with usage, configuration, and software problems with your Lenovo products.

For more information about Support Line and other IBM services, see http://www.ibm.com/services or see http://www.ibm.com/planetwide for support telephone numbers. In the U.S. and Canada, call 1-800-IBM-SERV (1-800-426-7378).

Hardware service and support

IBM is Lenovo's preferred service provider for the System x, Flex System and NeXtScale System products.

You can receive hardware service through your Lenovo reseller or from IBM. To locate a reseller authorized by Lenovo to provide warranty service, go to http://www.ibm.com/partnerworld and click **Business Partner Locator**. For IBM support telephone numbers, see http://www.ibm.com/planetwide. In the U.S. and Canada, call 1-800-IBM-SERV (1-800-426-7378).

In the U.S. and Canada, hardware service and support is available 24 hours a day, 7 days a week. In the U.K., these services are available Monday through Friday, from 9 a.m. to 6 p.m.

Taiwan product service

Use this information to contact IBM Taiwan product service.

台灣 IBM 產品服務聯絡方式：
台灣國際商業機器股份有限公司
台北市松仁路 7 號 3 樓
電話：0800-016-888

IBM Taiwan product service contact information:

IBM Taiwan Corporation
3F, No 7, Song Ren Rd.
Taipei, Taiwan
Telephone: 0800-016-888

Appendix E. Notices

Lenovo may not offer the products, services, or features discussed in this document in all countries. Consult your local Lenovo representative for information on the products and services currently available in your area.

Any reference to a Lenovo product, program, or service is not intended to state or imply that only that Lenovo product, program, or service may be used. Any functionally equivalent product, program, or service that does not infringe any Lenovo intellectual property right may be used instead. However, it is the user's responsibility to evaluate and verify the operation of any other product, program, or service.

Lenovo may have patents or pending patent applications covering subject matter described in this document. The furnishing of this document is not an offer and does not provide a license under any patents or patent applications. You can send inquiries in writing to the following:

Lenovo (United States), Inc.
1009 Think Place
Morrisville, NC 27560
U.S.A.
Attention: Lenovo VP of Intellectual Property

LENOVO PROVIDES THIS PUBLICATION “AS IS” WITHOUT WARRANTY OF ANY KIND, EITHER EXPRESS OR IMPLIED, INCLUDING, BUT NOT LIMITED TO, THE IMPLIED WARRANTIES OF NON-INFRINGEMENT, MERCHANTABILITY OR FITNESS FOR A PARTICULAR PURPOSE. Some jurisdictions do not allow disclaimer of express or implied warranties in certain transactions, therefore, this statement may not apply to you.

This information could include technical inaccuracies or typographical errors. Changes are periodically made to the information herein; these changes will be incorporated in new editions of the publication. Lenovo may make improvements and/or changes in the product(s) and/or the program(s) described in this publication at any time without notice.

The products described in this document are not intended for use in implantation or other life support applications where malfunction may result in injury or death to persons. The information contained in this document does not affect or change Lenovo product specifications or warranties. Nothing in this document shall operate as an express or implied license or indemnity under the intellectual property rights of Lenovo or third parties. All information contained in this document was obtained in specific environments and is presented as an illustration. The result obtained in other operating environments may vary.

Lenovo may use or distribute any of the information you supply in any way it believes appropriate without incurring any obligation to you.

Any references in this publication to non-Lenovo Web sites are provided for convenience only and do not in any manner serve as an endorsement of those Web sites. The materials at those Web sites are not part of the materials for this Lenovo product, and use of those Web sites is at your own risk.

Any performance data contained herein was determined in a controlled environment. Therefore, the result obtained in other operating environments may vary significantly. Some measurements may have been made on development-level systems and there is no guarantee that these measurements will be the same on generally available systems. Furthermore, some measurements may have been estimated through extrapolation. Actual results may vary. Users of this document should verify the applicable data for their specific environment.

© Copyright Lenovo 2016, 2023

Trademarks

Lenovo, the Lenovo logo, Flex System, System x, NeXtScale System, and x Architecture are trademarks of Lenovo in the United States, other countries, or both.

Intel and Xeon are trademarks of Intel Corporation or its subsidiaries in the U.S. and/or other countries.

Internet Explorer, Microsoft, and Windows are trademarks of the Microsoft group of companies.

Linux is a registered trademark of Linus Torvalds.

Other company, product, or service names may be trademarks or service marks of others.

Important notes

Processor speed indicates the internal clock speed of the microprocessor; other factors also affect application performance.

CD or DVD drive speed is the variable read rate. Actual speeds vary and are often less than the possible maximum.

When referring to processor storage, real and virtual storage, or channel volume, KB stands for 1 024 bytes, MB stands for 1 048 576 bytes, and GB stands for 1 073 741 824 bytes.

When referring to hard disk drive capacity or communications volume, MB stands for 1 000 000 bytes, and GB stands for 1 000 000 000 bytes. Total user-accessible capacity can vary depending on operating environments.

Maximum internal hard disk drive capacities assume the replacement of any standard hard disk drives and population of all hard-disk-drive bays with the largest currently supported drives that are available from Lenovo.

Maximum memory might require replacement of the standard memory with an optional memory module.

Each solid-state memory cell has an intrinsic, finite number of write cycles that the cell can incur. Therefore, a solid-state device has a maximum number of write cycles that it can be subjected to, expressed as `total bytes written` (TBW). A device that has exceeded this limit might fail to respond to system-generated commands or might be incapable of being written to. Lenovo is not responsible for replacement of a device that has exceeded its maximum guaranteed number of program/erase cycles, as documented in the Official Published Specifications for the device.

Lenovo makes no representations or warranties with respect to non-Lenovo products. Support (if any) for the non-Lenovo products is provided by the third party, not Lenovo.

Some software might differ from its retail version (if available) and might not include user manuals or all program functionality.

Recycling information

Lenovo encourages owners of information technology (IT) equipment to responsibly recycle their equipment when it is no longer needed. Lenovo offers a variety of programs and services to assist equipment owners in recycling their IT products. For information on recycling Lenovo products, go to http://www.lenovo.com/recycling.

Particulate contamination

Attention: Airborne particulates (including metal flakes or particles) and reactive gases acting alone or in combination with other environmental factors such as humidity or temperature might pose a risk to the device that is described in this document.

Risks that are posed by the presence of excessive particulate levels or concentrations of harmful gases include damage that might cause the device to malfunction or cease functioning altogether. This specification sets forth limits for particulates and gases that are intended to avoid such damage. The limits must not be viewed or used as definitive limits, because numerous other factors, such as temperature or moisture content of the air, can influence the impact of particulates or environmental corrosives and gaseous contaminant transfer. In the absence of specific limits that are set forth in this document, you must implement practices that maintain particulate and gas levels that are consistent with the protection of human health and safety. If Lenovo determines that the levels of particulates or gases in your environment have caused damage to the device, Lenovo may condition provision of repair or replacement of devices or parts on implementation of appropriate remedial measures to mitigate such environmental contamination. Implementation of such remedial measures is a customer responsibility.

Table 35. Limits for particulates and gases

Contaminant	Limits
Particulate	• The room air must be continuously filtered with 40% atmospheric dust spot efficiency (MERV 9) according to ASHRAE Standard 52.2[1]. • Air that enters a data center must be filtered to 99.97% efficiency or greater, using high-efficiency particulate air (HEPA) filters that meet MIL-STD-282. • The deliquescent relative humidity of the particulate contamination must be more than 60%[2]. • The room must be free of conductive contamination such as zinc whiskers.
Gaseous	• Copper: Class G1 as per ANSI/ISA 71.04-1985[3] • Silver: Corrosion rate of less than 300 Å in 30 days

[1] ASHRAE 52.2-2008 - *Method of Testing General Ventilation Air-Cleaning Devices for Removal Efficiency by Particle Size*. Atlanta: American Society of Heating, Refrigerating and Air-Conditioning Engineers, Inc.

[2] The deliquescent relative humidity of particulate contamination is the relative humidity at which the dust absorbs enough water to become wet and promote ionic conduction.

[3] ANSI/ISA-71.04-1985. *Environmental conditions for process measurement and control systems: Airborne contaminants*. Instrument Society of America, Research Triangle Park, North Carolina, U.S.A.

Telecommunication regulatory statement

This product may not be certified in your country for connection by any means whatsoever to interfaces of public telecommunications networks. Further certification may be required by law prior to making any such connection. Contact a Lenovo representative or reseller for any questions.

Electronic emission notices

When you attach a monitor to the equipment, you must use the designated monitor cable and any interference suppression devices that are supplied with the monitor.

Federal Communications Commission (FCC) statement

Note: This equipment has been tested and found to comply with the limits for a Class A digital device, pursuant to Part 15 of the FCC Rules. These limits are designed to provide reasonable protection against harmful interference when the equipment is operated in a commercial environment. This equipment generates, uses, and can radiate radio frequency energy and, if not installed and used in accordance with the instruction manual, may cause harmful interference to radio communications. Operation of this equipment in a residential area is likely to cause harmful interference, in which case the user will be required to correct the interference at his own expense.

Properly shielded and grounded cables and connectors must be used in order to meet FCC emission limits. Lenovo is not responsible for any radio or television interference caused by using other than recommended cables and connectors or by unauthorized changes or modifications to this equipment. Unauthorized changes or modifications could void the user's authority to operate the equipment.

This device complies with Part 15 of the FCC Rules. Operation is subject to the following two conditions: (1) this device may not cause harmful interference, and (2) this device must accept any interference received, including interference that might cause undesired operation.

Industry Canada Class A emission compliance statement

This Class A digital apparatus complies with Canadian ICES-003.

Avis de conformité à la réglementation d'Industrie Canada

Cet appareil numérique de la classe A est conforme à la norme NMB-003 du Canada.

Australia and New Zealand Class A statement

Attention: This is a Class A product. In a domestic environment this product may cause radio interference in which case the user may be required to take adequate measures.

European Union EMC Directive conformance statement

This product is in conformity with the protection requirements of EU Council Directive 2014/30/EU on the approximation of the laws of the Member States relating to electromagnetic compatibility. Lenovo cannot accept responsibility for any failure to satisfy the protection requirements resulting from a non-recommended modification of the product, including the installation of option cards from other manufacturers.

This product has been tested and found to comply with the limits for Class A equipment according to European Standards harmonized in the Directives in compliance. The limits for Class A equipment were derived for commercial and industrial environments to provide reasonable protection against interference with licensed communication equipment.

Lenovo, Einsteinova 21, 851 01 Bratislava, Slovakia

Warning: This is a Class A product. In a domestic environment this product may cause radio interference in which case the user may be required to take adequate measures.

Germany Class A statement

Deutschsprachiger EU Hinweis: Hinweis für Geräte der Klasse A EU-Richtlinie zur Elektromagnetischen Verträglichkeit

Deutschsprachiger EU Hinweis:Hinweis für Geräte der Klasse A EU-Richtlinie zur Elektromagnetischen Verträglichkeit Dieses Produkt entspricht den Schutzanforderungen der EU-Richtlinie 2014/30/EU (früher 2004/108/EC) zur Angleichung der Rechtsvorschriften über die elektromagnetische Verträglichkeit in den EU-Mitgliedsstaaten und hält die Grenzwerte der Klasse A der Norm gemäß Richtlinie.

Um dieses sicherzustellen, sind die Geräte wie in den Handbüchern beschrieben zu installieren und zu betreiben. Des Weiteren dürfen auch nur von der Lenovo empfohlene Kabel angeschlossen werden. Lenovo übernimmt keine Verantwortung für die Einhaltung der Schutzanforderungen, wenn das Produkt ohne Zustimmung der Lenovo verändert bzw. wenn Erweiterungskomponenten von Fremdherstellern ohne Empfehlung der Lenovo gesteckt/eingebaut werden.

Deutschland:

Einhaltung des Gesetzes über die elektromagnetische Verträglichkeit von Betriebsmittein Dieses Produkt entspricht dem „Gesetz über die elektromagnetische Verträglichkeit von Betriebsmitteln“ EMVG (früher „Gesetz über die elektromagnetische Verträglichkeit von Geräten“). Dies ist die Umsetzung der EU-Richtlinie 2014/30/EU (früher 2004/108/EC) in der Bundesrepublik Deutschland.

Zulassungsbescheinigung laut dem Deutschen Gesetz über die elektromagnetische Verträglichkeit von Betriebsmitteln, EMVG vom 20. Juli 2007 (früher Gesetz über die elektromagnetische Verträglichkeit von Geräten), bzw. der EMV EU Richtlinie 2014/30/EU (früher 2004/108/EC), für Geräte der Klasse A.

Dieses Gerät ist berechtigt, in Übereinstimmung mit dem Deutschen EMVG das EG-Konformitätszeichen - CE - zu führen. Verantwortlich für die Konformitätserklärung nach Paragraf 5 des EMVG ist die Lenovo (Deutschland) GmbH, Meitnerstr. 9, D-70563 Stuttgart.

Informationen in Hinsicht EMVG Paragraf 4 Abs. (1) 4:**Das Gerät erfüllt die Schutzanforderungen nach EN 55024 und EN 55022 Klasse A.**

Nach der EN 55022: „Dies ist eine Einrichtung der Klasse A. Diese Einrichtung kann im Wohnbereich Funkstörungen verursachen; in diesem Fall kann vom Betreiber verlangt werden, angemessene Maßnahmen durchzuführen und dafür aufzukommen.“

Nach dem EMVG: „Geräte dürfen an Orten, für die sie nicht ausreichend entstört sind, nur mit besonderer Genehmigung des Bundesministers für Post und Telekommunikation oder des Bundesamtes für Post und Telekommunikation betrieben werden. Die Genehmigung wird erteilt, wenn keine elektromagnetischen Störungen zu erwarten sind.“ (Auszug aus dem EMVG, Paragraph 3, Abs. 4). Dieses Genehmigungsverfahren ist nach Paragraph 9 EMVG in Verbindung mit der entsprechenden Kostenverordnung (Amtsblatt 14/93) kostenpflichtig.

Anmerkung: Um die Einhaltung des EMVG sicherzustellen sind die Geräte, wie in den Handbüchern angegeben, zu installieren und zu betreiben.

Japanese electromagnetic compatibility statements

Japan VCCI Class A statement

この装置は、クラスＡ情報技術装置です。この装置を家庭環境で使用すると電波障害を引き起こすことがあります。この場合には使用者が適切な対策を講ずるよう要求されることがあります。　ＶＣＣＩ－Ａ

Japanese Electrical Appliance and Material Safety Law statement (for detachable AC power cord)

本製品およびオプションに電源コード・セットが付属する場合は、
それぞれ専用のものになっていますので他の電気機器には使用しないでください。

JEITA harmonics guideline - Japanese Statement for AC power consumption (W)

定格入力電力表示
(社) 電子情報技術参照委員会 家電・汎用品高調波抑制対策ガイドライン
実行計画書に基づく定格入力電力値：　　W
お手持ちのユニットの定格入力電力値(W)はユニットの電源装置に貼付
されている電源仕様ラベルをご参照下さい

JEITA harmonics guideline - Japanese Statement of Compliance for Products Less than or Equal to 20A per phase

JEITA 高調波電流抑制対策適合品表示 (JEITA harmonics statements– Japan)
定格電流が 20A／相以下の機器 (For products where input current is less than or equal to 20A per phase)

日本の定格電流が 20A/相 以下の機器に対する高調波電流規制高調波電流規格
JIS C 61000-3-2 適合品

JEITA harmonics guideline - Japanese Statement of Compliance for Products More than 20A

定格電流が 20A／相を超える機器 (For products where input current is less than 20A/Phase of one PSU, but total system power is over 20A/Phase)

本製品は、１相当たり20Aを超える機器ですが、個々のユニットが「高調波電流規格 JIS C 61000-3-2適合品」であり、
本製品はその組み合わせであるため、「高調波電流規格 JIS C 61000-3-2適合品」としています

Korea Communications Commission (KCC) statement

이 기기는 업무용(A급)으로 전자파적합기기로서 판매자 또는 사용자는 이 점을 주의하시기 바라며, 가정외의 지역에서 사용하는 것을 목적으로 합니다.

This is electromagnetic wave compatibility equipment for business (Type A). Sellers and users need to pay attention to it. This is for any areas other than home.

Russia Electromagnetic Interference (EMI) Class A statement

ВНИМАНИЕ! Настоящее изделие относится к классу А.
В жилых помещениях оно может создавать радиопомехи, для снижения которых необходимы дополнительные меры

People's Republic of China Class A electronic emission statement

声　　明

此为 A 级产品。在生活环境中，该产品可能会造成无线电干扰。在这种情况下，可能需要用户对其干扰采取切实可行的措施。

Taiwan Class A compliance statement

警告使用者:
這是甲類的資訊產品，在居住的環境中使用時，可能會造成射頻干擾，在這種情況下，使用者會被要求採取某些適當的對策。

Taiwan BSMI RoHS declaration

單元 Unit	限用物質及其化學符號 Restricted substances and its chemical symbols					
	鉛Lead (Pb)	汞Mercury (Hg)	鎘Cadmium (Cd)	六價鉻 Hexavalent chromium (Cr^{+6})	多溴聯苯 Polybrominated biphenyls (PBB)	多溴二苯醚 Polybrominated diphenyl ethers (PBDE)
機架	○	○	○	○	○	○
外部蓋板	○	○	○	○	○	○
機械組合件	–	○	○	○	○	○
空氣傳動設備	–	○	○	○	○	○
冷卻組合件	–	○	○	○	○	○
內存模塊	–	○	○	○	○	○
處理器模塊	–	○	○	○	○	○
鍵盤	–	○	○	○	○	○
調製解調器	–	○	○	○	○	○
監視器	–	○	○	○	○	○
滑鼠	–	○	○	○	○	○
電纜組合件	–	○	○	○	○	○
電源	–	○	○	○	○	○
儲備設備	–	○	○	○	○	○
電池匣組合件	–	○	○	○	○	○
電池	–	○	○	○	○	○
有mech的電路卡	–	○	○	○	○	○
無mech的電路卡	–	○	○	○	○	○
雷射器	–	○	○	○	○	○

備考1.〝超出0.1 wt %〞及〝超出0.01 wt %〞係指限用物質之百分比含量超出百分比含量基準值。

Note1 : "exceeding 0.1wt%" and "exceeding 0.01 wt%" indicate that the percentage content of the restricted substance exceeds the reference percentage value of presence condition.

備考2.〝○〞係指該項限用物質之百分比含量未超出百分比含量基準值。

Note2 : " ○ "indicates that the percentage content of the restricted substance does not exceed the percentage of reference value of presence.

備考3.〝 - 〞係指該項限用物質為排除項目。

Note3 : The "-" indicates that the restricted substance corresponds to the exemption.

Appendix F. Power cord safety statement

Attention: Use No. 26 AWG or larger UL-listed or CSA certified telecommunication line cord.

© Copyright Lenovo 2016, 2023

Index

A

ABR, automatic boot recovery 87
ac power-supply
  LEDs 54
ac power-supply LEDs 54
acoustical noise emissions 5
active memory 10
adapter
  removing 132
  replacing 133
air baffle
  removing 114
  replacing 115
appliance name, updating 45
ASM event log 58
assertion event, system-event log 57
assistance, getting 885
attention notices 5
Australia Class A statement 892
automatic boot recovery (ABR) 87
availability, server 12

B

backup firmware
  starting 36
battery, coin-cell
  removing 144
  replacing 147
BIOS optimization, configuring 46
blue-screen capture feature
  overview 37
blue-screen feature 37
Boot Manager 36
Boot Manager program 30
button, presence detection 15
buttons
  system board 22

C

call home feature
  Electronic Service Agent 63
call home tools 62
Canada Class A electronic emission statement 892
caution statements 5
chassis fan, replacing 103
checkout procedure 50
  performing 51
China Class A electronic emission statement 895
Class A electronic emission notice 892
collecting data 47
COM port bracket
  removing 158
  replacing 160
COM port bracket, removing 158
COM port bracket, replacing 160
components
  server 20, 89
configuration
  information 29
  instructions 29
  Nx-boot failure 87
  Setup Utility 29
configuration programs 30
configuring hardware 30
configuring your server 29
configuring, BIOS optimization 46
configuring, boot options 46
configuring, HX Series appliance 45
connector
  USB 14
  video
    front 14
connectors
  external 21
  internal 21
contamination, particulate and gaseous 891
controller
  Ethernet 39
controls and LEDs
  operator information panel 15
controls, LEDs, and power 14
cooling 10
cover
  removing 112
  replacing 113
creating a personalized support Web page 886
custom support Web page 886

D

danger statements 5
data collection 47
DCA 46
deassertion event, system-event log 57
dedicated slotless HBA controller, removing 131
dedicated slotless HBA controller, replacing 131
device drivers 36
devices, static-sensitive
  handling 110
diagnostic
  on-board programs, starting 61
  tools, overview 51
diagnostic codes and messages
  POST/UEFI 753
diagnostics
  program overview 60
diagnostics program
  DSA Preboot 10
dimension 5
DIMM
  installing 121
  memory
    two-DIMM-per-channel (2DPC) 121
  removing 120
  two-DIMM-per-channel (2DPC)
    requirement 121
DIMM installation sequence 123
  memory mirrored channel 124
  rank sparing 125
direct cache access 46
display problems 71
documentation 4
  CD 3
  Documentation Browser 3
  updates 1
  using 886
documentation, updated
  finding 4
DSA
  program, overview 60

© Copyright Lenovo 2016, 2023

test log, viewing 62
text message format 62
DSA data
how to send to Lenovo 111
DSA edition 61
DSA log 57
DSA Portable 51
DSA Preboot 51, 61
DSA, sending data 886
Dynamic System Analysis
DSA Preboot 61
edition 61
Dynamic System Analysis (DSA) Preboot diagnostics program 10

E

EIA bracket
removing 116
replacing 117
electronic emission Class A notice 892
Electronic Service Agent 63
enabling
Features on Demand
Ethernet software 40
enabling, legacy boot mode 45
Enterprise X-Architecture technology 10
error codes and messages
IMM2.1 183
error messages 63
error symptoms
general 63
hard disk drive 64
intermittent 66
keyboard 67
memory 68
microprocessor 70
monitor 71
mouse 67
network connection 73
power 73
serial port 78
software 79
USB port 80
USB-device 67
video 71, 80
errors
format, DSA code 62
Ethernet 10
controller 82
Ethernet activity
LED 15
Ethernet controller configuration 30
Ethernet support 10
European Union EMC Directive conformance statement 892
event log 57
viewing 58
event log, POST 57
event log, system 57
event logs
clearing 59
event logs, methods for viewing 58
external connectors 21

F

fans 10
FCC Class A notice 892
features 5
Features on Demand 10
finding
updated documentation 4
firmware
updates 1
firmware updates 1
firmware, server, recovering 85
firmware, updating 29
FPGA heartbeat
LED 56
front
view 14
front HDD/SSD, replacing 101
front view
connectors 14
LED location 14

G

gaseous contamination 891
general
problems 63
Germany Class A statement 892
grease, thermal 173
guidelines
options installation 108
system reliability 109

H

handling static-sensitive devices 110
hard disk drive
activity LED 14
problems 64
status LED 14
hardware
requirements 3
hardware service and support telephone numbers 887
hardware, configuring 30
heat sink
removing 162
replacing 166
help
from the World Wide Web 886
from World Wide Web 886
sending diagnostic data 886
sources of 885
high-level procedures, replacing components 101
host bus adapter, replacing 104
hot-swap ac power supply
removing 138
replacing 139
hot-swap hard disk drive
replacing 119
hot-swap hard disk drive backplane
removing 141
replacing 142
hot-swap hard disk drives
removing 118
how to send DSA data to Lenovo 111
HX Series appliance, configuring 45

I

IMM heartbeat
LED 56
IMM host name 38
IMM Web interface 39
IMM2 30
IMM2.1
error messages 183
important notices 5, 890
in-band

automated boot recovery method 87
manual recovery method 85
information center 886
installation
guidelines 108
installation guidelines 108
installing
DIMM 121
media cage 150
memory module 121
integrated management module
overview 10
using 36
Integrated management module 2.1
error messages 183
integrated management module II
event log 57–58
programs 30
intermittent
problems 66
internal connectors 21
introduction 1
IP address for the IMM 38
IPMI event log 57–58
IPMItool 58

J

Japanese electromagnetic compatibility statements 893
jumper
UEFI boot recovery 85
jumpers
system board 22

K

Korea Class A electronic emission statement 894

L

LCD operating panel assembly 15
LCD system information display panel
removing 155
replacing 156
LED
Ethernet activity 15
FPGA heartbeat 56
hard disk drive activity 14
hard disk drive status 14
IMM heartbeat 56
power-on 15
system information 15
system locator 15
system-error 15
LEDs
ac power-supply 54
PCI riser-card 57
power-supply 54
system board 24
legacy boot mode, enabling 45
Lenovo ToolsCenter Suite CLI log 58
Lenovo ToolsCenter Suite CLI program
overview 40
Lenovo XClarity Administrator 10
updating 40
License Agreement for Machine Code 4
Licenses and Attributions Documents 4
light path diagnostics 10, 53
local area network (LAN) 10
log on 39

M

management, system 10
media cage
installing 150
removing 149
memory 10
memory DIMM, replacing 106
memory mirrored channel
description 124
DIMM population sequence 124
memory module
installing 121
removing 120
replacing 127
memory rank sparing
description 125
memory support 10
menu choices
Setup Utility 32
messages, diagnostic
POST/UEFI 753
method 87
methods, viewing event logs 58
microprocessor 10
problems 70
removing 162
replacing 166
microprocessor, replacing 107
mirrored channel mode 124
model name
location 83

N

network interface card, replacing 103
New Zealand Class A statement 892
NMI button 18
notes 5
notes, important 890
notices 889
electronic emission 892
FCC, Class A 892
notices and statements 5
Nx-boot failure 87

O

obtaining 38
online documentation 1
online publications 4
operating mode 46
operating-system event log 57–58
operator information panel
controls and LEDs 15
replacing 154
operator information panel assembly
removing 154
operator information panel release latch 14
out-of-band 87

P

particulate contamination 891
parts listing 89
parts, structural 97
PCI
riser-card assembly 128–129
PCI riser slots
installation configurations 133
supported configurations 133

© Copyright Lenovo 2016, 2023

PCI riser-card
  LEDs location 57
PCI riser-card assembly
  removing 128
  replacing 129
People's Republic of China Class A electronic emission statement 895
POST 60
  event log 58
POST event log 57
POST/UEFI
  diagnostic codes 753
power
  power-control button 15
power cords 98
power features
  server 25
power performance bias 46
power problems 73, 81
power supply unit, replacing 102
power-on LED 15, 25
power-supply
  LEDs 54
power-supply LEDs 54
presence detection button 15
problems
  Ethernet controller 82
  general 63
  hard disk drive 64
  IMM2.1 183
  intermittent 66
  keyboard 67
  memory 68
  microprocessor 70
  monitor 71
  mouse 67
  network connection 73
  power 73, 81
  serial port 78
  software 79
  undetermined 83
  USB port 80
  video 71, 80
procedure, checkout 51
product service, Taiwan 887
program
  Lenovo ToolsCenter Suite CLI 40
publications
  online 1
  product data 1

R

rack
  specifications 9
rack release latches 14
rail
  specifications 9
rank sparing
  DIMM population sequence 125
rank sparing mode 125
RAS features, server 12
rear
  view 18
rear view
  connectors 18
  LED location 18
recovering the server firmware 85
redundant
  cooling 10
  Ethernet connection 10
  NIC 10
Redundant
  Ethernet capabilities 12
  hot-swap power supplies 12
reliability, server 12
remote presence feature
  using 37
removing
  adapter 132
  air baffle 114
  battery, coin-cell 144
  COM port bracket 158
  components 101
  cover 112
  DIMM 120
  EIA bracket 116
  heat sink 162
  hot-swap ac power supply 138
  hot-swap hard disk drive 118
  hot-swap hard disk drive backplane 141
  LCD system information display panel 155
  media cage 149
  memory module 120
  microprocessor 162
  operator information panel assembly 154
  PCI riser-card assembly 128
  system board 174
  thermal kit, hot-swap fan 135
  USB connector assembly, front 150
  video connector assembly, front 152
removing, dedicated slotless HBA controller 131
removing, SATADOM 179
replaceable server components 89
replacing
  adapter 133
  air baffle 115
  battery, coin-cell 147
  COM port bracket 160
  components 101
  cover 113
  EIA bracket 117
  heat sink 166
  hot-swap ac power supply 139
  hot-swap hard disk drive 119
  hot-swap hard disk drive backplane 142
  LCD system information display panel 156
  memory module 127
  microprocessor 166
  operator information panel 154
  PCI riser-card assembly 129
  server components 111
  structural parts 112
  system board 176
  thermal kit, hot-swap fan 136
  Tier 1 CRUs 118
  Tier 2 CRUs 162
  USB connector assembly, front 151
  video connector assembly, front 153
replacing, chassis fan 103
replacing, dedicated slotless HBA controller 131
replacing, front HDD/SSD 101
replacing, host bus adapter 104
replacing, memory DIMM 106
replacing, microprocessor 107
replacing, network interface card 103
replacing, power supply unit 102
replacing, SATADOM 180
replacing, SATADOM boot drive 108
replacing, system board 107
returning
  component 111
  device 111
Russia Class A electronic emission statement 894

S

safety v
Safety Information 5
safety statements v–vi
SATADOM boot drive, replacing 108
SATADOM, removing 179
SATADOM, replacing 180
sending diagnostic data 886
sending DSA data
  to Lenovo 111
serial number 1
  location 83
serial port problems 78
server
  offerings 10
  power features 25
  turning off 26
  turning on 25
server components 20, 89
server configuration
  updating 111
server controls, LEDs, and power 14
server firmware, recovering 85
server shutdown 26
server, backup firmware
  starting 36
service and support
  before you call 885
  hardware 887
  software 887
service bulletins 50
serviceability, server 12
Setup Utility 29–30
  menu choices 32
  starting 31
  using 31
shutting down the server 26
size 5
SMP 10
software
  requirements 3
software problems 79
software service and support telephone numbers 887
specifications 5, 9
starting
  backup firmware 36
  Setup Utility 31
statements and notices 5
static-sensitive devices
  handling 110
structural parts 97
support Web page, custom 886
switches
  system board 22
symmetric multiprocessing 10
system
  error LED front 15
  locator LED, front 15
System
  information LED 15
system board
  buttons 22
  external connectors 21
  internal connectors 21
  jumpers 22
  LEDs 24
  removing 174
  replacing 176
  switches 22
system board, replacing 107
system event log 58
system pulse LEDs 56
system reliability guidelines 109
system-event log 57
system-event log, assertion event 57
system-event log, deassertion event 57
systems management 10

T

Taiwan BSMI RoHS declaration 896
Taiwan Class A electronic emission statement 895
Taiwan product service 887
telecommunication regulatory statement 891
telephone numbers 887
test log, viewing 62
thermal grease 173
thermal kit, hot-swap fan
  removing 135
  replacing 136
tools, call home 62
tools, diagnostic 51
trademarks 890
troubleshooting 47
  symptom 63
turning off the server 26
turning on the server 25

U

UEFI
  boot recovery jumper 85
undetermined problems 83
undocumented problems 49
United States FCC Class A notice 892
Universal Serial Bus (USB) problems 80
UpdateXpress 29, 36
updating
  DMI/SMBIOS data 43
  firmware 29
  Lenovo XClarity Administrator 40
  server configuration 111
  Universal Unique Identifier (UUID) 41
updating, appliance name 45
USB
  connector 14
USB connector assembly, front
  removing 150
  replacing 151
using
  integrated management module 36
  Setup Utility 31
  the remote presence feature 37
utility, Setup 30
  starting 31
  using 31

V

video connector
  front 14
video connector assembly, front
  removing 152
  replacing 153
viewing event log 58

W

Wake on LAN feature 25
weight 5
what the server offers 10
working inside the server
  power on 110

© Copyright Lenovo 2016, 2023

X

X-Architecture technology 10

Lenovo